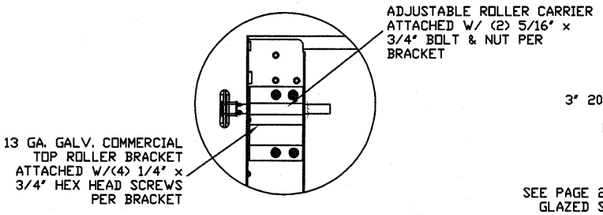

TYPICAL TOP FIXTURES (1)
N.T.S.

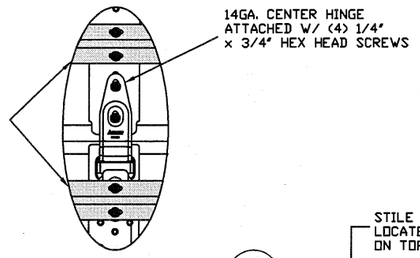

TYPICAL CENTER HINGE (2)
N.T.S.

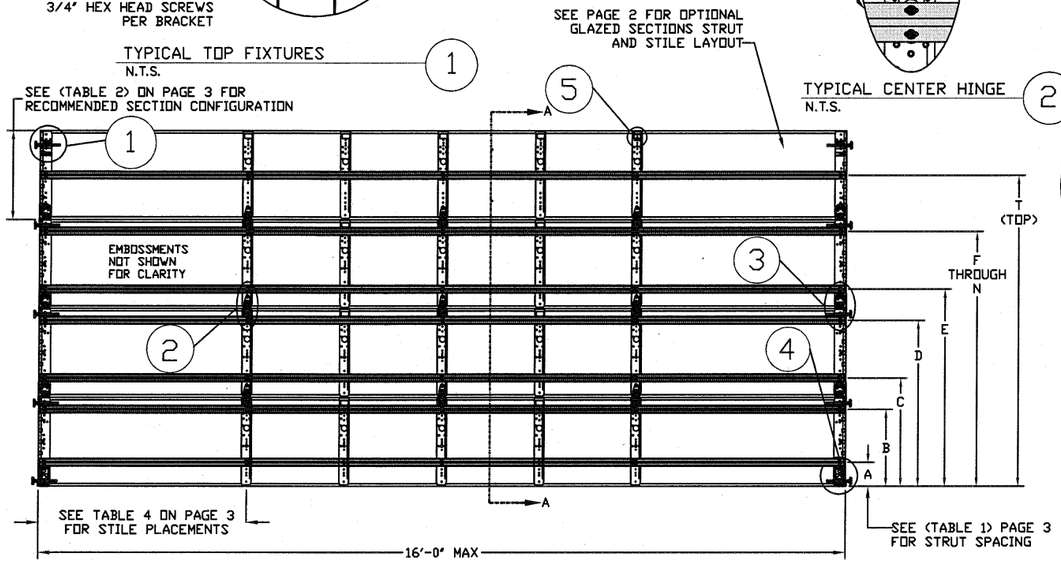

INSIDE ELEVATION
N.T.S.

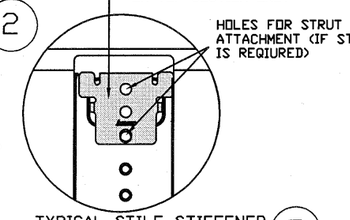

TYPICAL STILE STIFFENER (5)
N.T.S.

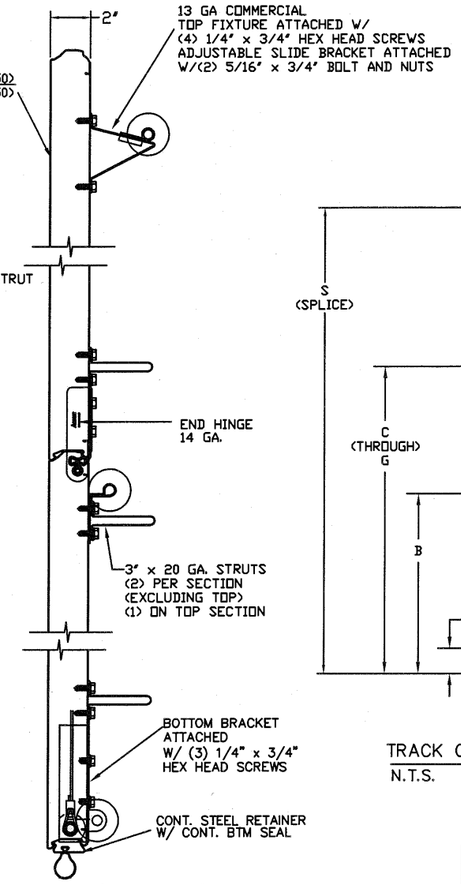

SECTION A–A (SIDE VIEW)
N.T.S.

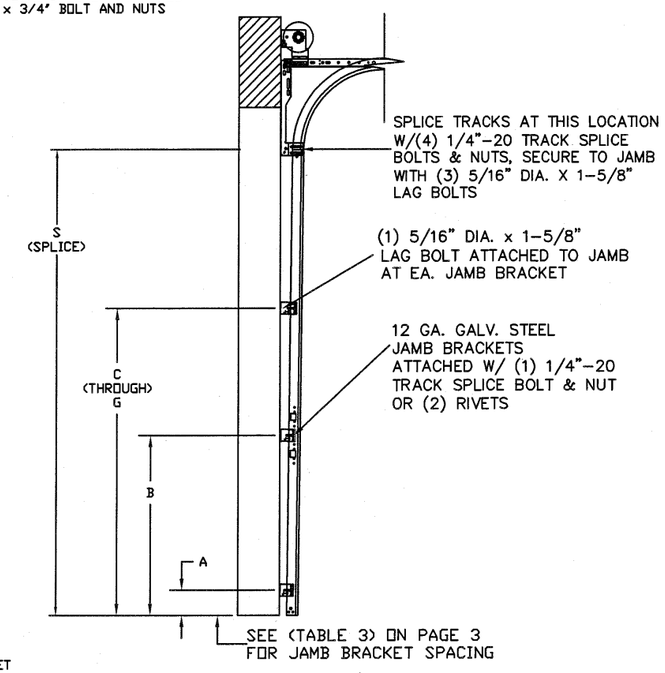

TRACK CONFIGURATION FOR 6'6" UP TO 14' TALL DOORS
N.T.S.

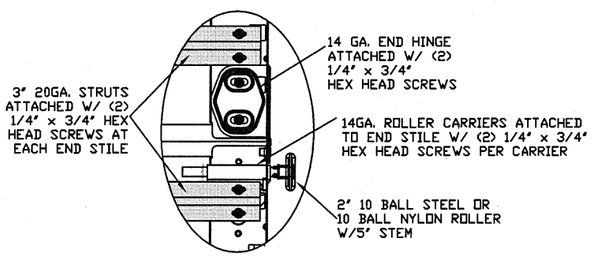

TYPICAL END HINGE (3)
N.T.S.

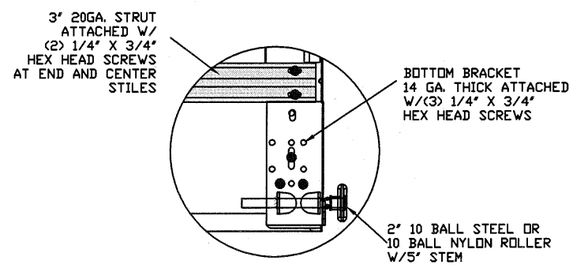

TYPICAL BOTTOM BRACKET (4)
N.T.S.

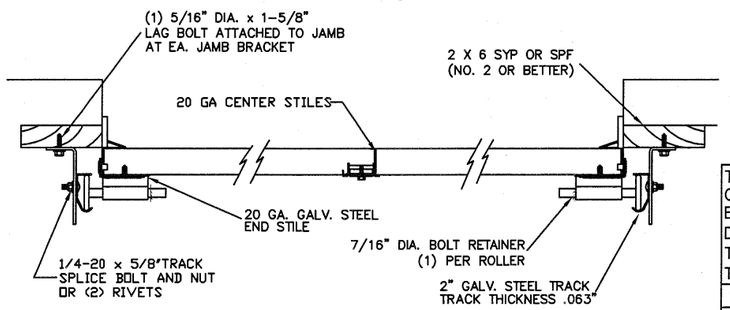

TRACK MOUNTING DETAIL
N.T.S.

LARGE MISSILE IMPACT RESISTANT

THE METHOD OF TESTING WAS IN SUBSTANTIAL CONFORMANCE WITH THE PROCEDURE DESCRIBED IN ASTM E330 AND DASMA 108. THE PRESSURES SHOWN ON THE DRAWINGS WERE CALCULATED USING ASCE 7-98/02/05 WITH THE FOLLOWING PARAMETERS (5 FEET OF DOOR WIDTH IN THE END ZONE, ROOF AT ANY SLOPE, AND I=1.0):

WIND SPEED (MPH)	130	118	112	107	103
EXPOSURE LEVEL	B	C	C	D	D
MEAN ROOF HEIGHT	30'	15'	25'	15'	25'

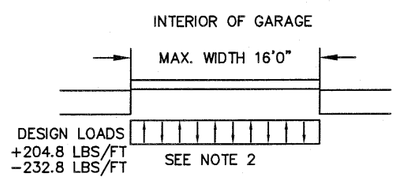

SPECIFICATIONS AND NOTES

1. ALL THE LOAD FROM THE DOOR IS TRANSFERRED TO THE VERTICAL TRACK, FROM THE TRACK THE LOAD IS TRANSFERRED TO THE VERTICAL JAMBS. THE HORIZONTAL JAMB OR HEADER RECEIVES NO PORTION OF THE LOAD TRANSFERRED FROM THE DOOR.
2. EACH VERTICAL JAMBS RECEIVES MAXIMUM DESIGN LOADS OF: +204.8 LBS/FT & -232.8 LBS/FT
3. DOORS AND HARDWARE WILL BE DESIGNED, MANUFACTURED AND INSTALLED WITH STANDARDS AS SET FORTH BY DASMA.
4. DOOR SECTIONS SHALL BE 25 GA. MIN. (.019") ROLLED FORMED LIGHT COMMERCIAL QUALITY
5. SUPPORTING STRUCTURAL ELEMENTS SHALL BE DESIGNED BY A REGISTRED PROFESSIONAL ENGINEER FOR WIND LOADS INDICATED ON THIS DRAWING IN ADDITION TO OTHER LOADINGS.
6. AMARR MANUFACTURES AND DISTRIBUTES GARAGE DOORS UNDER MANY BRAND LABELS. PLEASE SEE AMARR-MANUFACTURED PRIVATE LABEL CHART FOR REFERENCE OF EQUIVALENT PRODUCTS FOR WINDLOAD APPROVAL.
7. REFER TO TABLES ON THE PAGE 3 FOR ADDITIONAL DOOR WIDTHS
8. PANEL STAMP DOES NOT EFFECT WINDLOAD CAPABILITIES.

REV	DESCRIPTION OF REVISIONS	DATE	BY
A	WIND SPEED TABLE & TRACK CONFIGURATIONS	04/30/12	RLR
B	ADDED GLAZING NOTE	12/20/12	RLR

MAX SIZE
16' WIDTH
14' HEIGHT
(DOOR HEIGHT SUBJECT TO WEIGHT LIMITATIONS)
DESIGN LOADS
+25.6 PSF
-29.1 PSF
TEST LOADS
+38.4 PSF
-43.7 PSF
LARGE MISSILE IMPACT RESISTANT

Thomas L. Shelmerdine, PE (TX PE #85829)
Structural Solutions, PA (TX Firm #F-004063)

STATE OF TEXAS
THOMAS L. SHELMERDINE
85829
LICENSED
PROFESSIONAL ENGINEER
TX

dba Structural Solutions of North Carolina, Inc.
5921-G W. Friendly Ave., Greensboro, NC 27410

Amarr
165 CARRIAGE COURT WINSTON-SALEM, N.C. 27105

MODEL #650 OAK SUMMIT SERIES 1000 & 2000
MODEL #600 STRATFORD SERIES 1000 & 2000
MODEL #950 HERITAGE SERIES 1000 & 2000

SIZE	DRAWN BY	BHG	DATE	11/13/09	DRAWING NUMBER
B	CHECKED BY	CBT	DATE	11/13/09	IRC-6016-130-15-I
					SHEET 1 OF 3

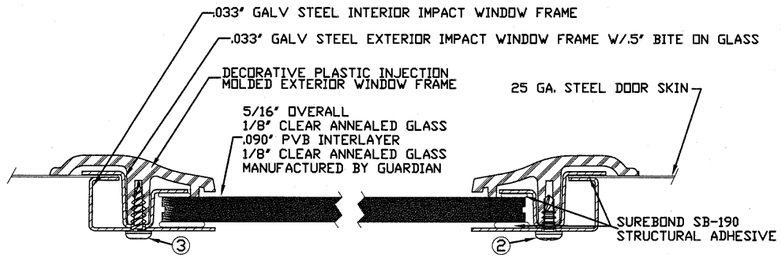

2. 3/16" X 1/2" SCREW - USED TO FASTEN THE STEEL EXTERIOR IMPACT WINDOW FRAME TO THE STEEL INTERIOR IMPACT WINDOW FRAME.
3. 11/64" X 1/2" SCREW - USED TO FASTEN DECORATIVE PLASTIC MOLDED WINDOW FRAME TO THE ASSEMBLY

SECTION B-B IMPACT WINDOW DETAIL
N.T.S.

WOOD JAMB ATTACHMENT TO STRUCTURE

2 X 6 VERTICAL JAMB ATTACHMENT TO WOOD FRAME STRUCTURE
5/16" X 3" LAG SCREWS STARTING 6" FROM ENDS THEN 24" O.C. (1 1/2" EMBEDMENT)
2 X 6 VERTICAL JAMB ATTACHMENT TO 2,000 PSI CONCRETE
HILTI KWIK BOLT 3/8" X 4" STARTING 6" FROM ENDS THEN 24" O.C. (2 1/2" EMBEDMENT)
HILTI SLEEVE ANCHOR 3/8" X 2-3/4" STARTING 6" FROM ENDS THEN 20" O.C. (1 1/4" EMBEDMENT)
ITW/RAMSET REDHEAD (TRU-BOLT) 3/8" X 4" STARTING 6" FROM ENDS THEN 24" O.C. (2 1/2" EMBEDMENT)
2 X 6 VERTICAL JAMB ATTACHMENT TO HOLLOW C-90 BLOCK
SIMPSON 1/4" X 3" TITEN SCREWS STARTING 6" FROM ENDS, USE PAIRS OF FASTENERS (3" APART) AT 16" O.C. (1 1/2" EMBEDMENT)
HILTI 1/4" X 2-3/4" KWIK-CON II+ SCREWS STARTING 6" FROM ENDS, USE PAIRS OF FASTENERS (3" APART) AT 16" O.C. (1 1/4" EMBEDMENT)

2 X 6 VERTICAL JAMB ATTACHMENT TO GROUTED C-90 BLOCK (2000 PSI GROUT)
HILTI SLEEVE ANCHOR 3/8" X 2-3/4" STARTING 6" FROM ENDS THEN 24" O.C. (1 1/4" EMBEDMENT) (OR, USE FASTENERS FOR HOLLOW C-90 BLOCK)

*LAGS AND BOLTS CAN BE COUNTERSUNK TO PROVIDE A FLUSH MOUNTING SURFACE.
*PREPARATION OF WOOD JAMBS BY OTHERS

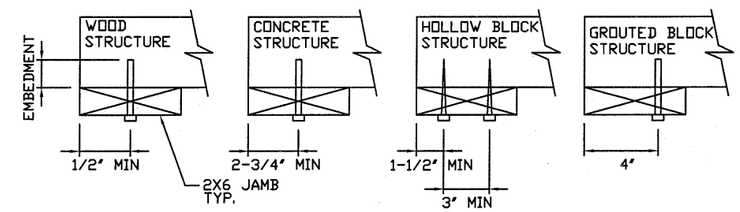

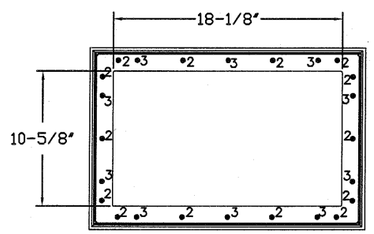

IMPACT GLAZING FASTENER DETAIL
N.T.S.

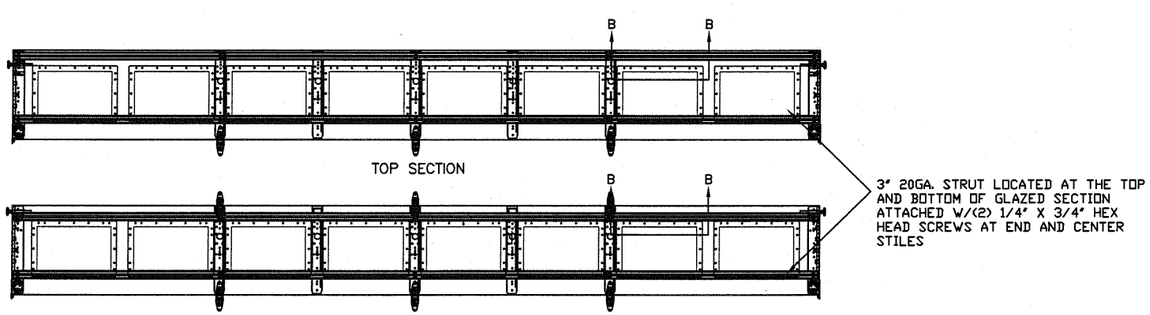

OPTIONAL SHORT PANEL GLAZED SECTION STRUT AND STILE LAYOUT

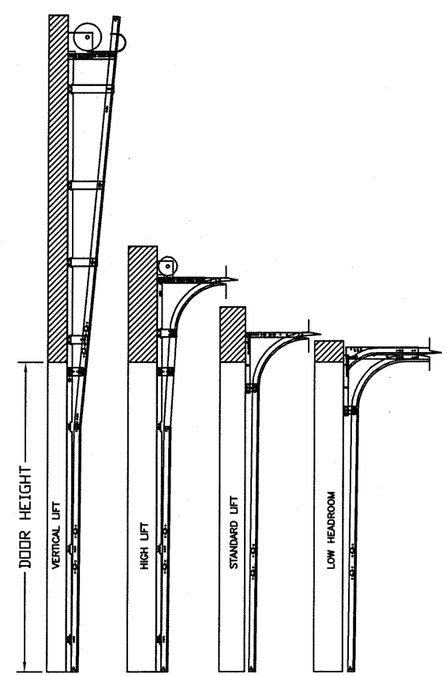

AVAILABLE TRACK CONFIGURATIONS
N.T.S.

REV	DESCRIPTION OF REVISIONS	DATE	BY
A	WIND SPEED TABLE & TRACK CONFIGURATIONS	04/30/12	RLR
B	ADDED GLAZING NOTE	12/20/12	RLR

MAX SIZE
16' WIDTH
14' HEIGHT
(DOOR HEIGHT SUBJECT TO WEIGHT LIMITATIONS)

DESIGN LOADS
+25.6 PSF
-29.1 PSF

TEST LOADS
+38.4 PSF
-43.7 PSF

LARGE MISSILE IMPACT RESISTANT

Thomas L. Shelmerdine, PE (TX PE #85829)
Structural Solutions, PA (TX Firm #F-004063)

STATE OF TEXAS
THOMAS L. SHELMERDINE
85829
LICENSED
PROFESSIONAL ENGINEER
TX

dba Structural Solutions of North Carolina, Inc.
5921-G W. Friendly Ave., Greensboro, NC 27410

Amarr
165 CARRIAGE COURT WINSTON-SALEM, N.C. 27105

MODEL #650 OAK SUMMIT SERIES 1000 & 2000
MODEL #600 STRATFORD SERIES 1000 & 2000
MODEL #950 HERITAGE SERIES 1000 & 2000

SIZE	DRAWN BY	BHG	DATE	11/13/09	DRAWING NUMBER
B	CHECKED BY	CBT	DATE	11/13/09	IRC-6016-130-15-I
					SHEET 2 OF 3

TABLE 1

DOOR HEIGHT	STRUT SPACING (BASED ON RECOMMENDED SECTION CONFIGURATION)														TOP
	A	B	C	D	E	F	G	H	I	J	K	L	M	N	T
6' 6"	5 1/2"	18 1/4"	25 1/2"	36 1/4"	43 1/2"	54 1/4"									67 1/2"
7' 0"	5 1/2"	18 1/4"	25 1/2"	39 1/4"	46 1/2"	60 1/4"									73 1/2"
7' 6"	5 1/2"	15 1/4"	22 1/2"	33 1/4"	40 1/2"	511/4"	58 1/2"	69 1/4"							81"
8' 0"	5 1/2"	18 1/4"	25 1/2"	36 1/4"	43 1/2"	54 1/4"	61 1/2"	72 1/4"							85 1/2"
8' 6"	5 1/2"	18 1/4"	25 1/2"	39 1/4"	46 1/2"	60 1/4"	67 1/2"	78 1/4"							91 1/2"
9' 0"	5 1/2"	15 1/4"	22 1/2"	33 1/4"	40 1/2"	511/4"	58 1/2"	69 1/4"	76 1/2"	87 1/4"					99"
9' 6"	5 1/2"	18 1/4"	25 1/2"	36 1/4"	43 1/2"	54 1/4"	61 1/2"	72 1/4"	79 1/2"	90 1/4"					103 1/2"
10' 0"	5 1/2"	18 1/4"	25 1/2"	39 1/4"	46 1/2"	60 1/4"	67 1/2"	78 1/4"	85 1/2"	96 1/4"					109 1/2"
10' 6"	5 1/2"	18 1/4"	25 1/2"	39 1/4"	46 1/2"	60 1/4"	67 1/2"	81 1/4"	88 1/2"	102 1/4"					115 1/2"
11' 0"	5 1/2"	18 1/4"	25 1/2"	36 1/4"	43 1/2"	54 1/4"	61 1/2"	72 1/4"	79 1/2"	90 1/4"	97 1/2"	108 1/4"			121 1/2"
11' 6"	5 1/2"	18 1/4"	25 1/2"	39 1/4"	46 1/2"	60 1/4"	67 1/2"	78 1/4"	85 1/2"	96 1/4"	103 1/2"	114 1/4"			127 1/2"
12' 0"	5 1/2"	18 1/4"	25 1/2"	39 1/4"	46 1/2"	60 1/4"	67 1/2"	81 1/4"	88 1/2"	102 1/4"	109 1/2"	120 1/4"			133 1/2"
12'6"	5 1/2"	18 1/4"	25 1/2"	36 1/4"	43 1/2"	54 1/4"	61 1/2"	72 1/4"	79 1/2"	90 1/4"	97 1/2"	108 1/4"	115 1/2"	126 1/4"	139 1/2"
13' 0"	5 1/2"	18 1/4"	25 1/2"	39 1/4"	46 1/2"	60 1/4"	67 1/2"	78 1/4"	85 1/2"	96 1/4"	103 1/2"	114 1/4"	121 1/2"	132 1/4"	145 1/2"
13' 6"	5 1/2"	18 1/4"	25 1/2"	39 1/4"	46 1/2"	60 1/4"	67 1/2"	81 1/4"	88 1/2"	102 1/4"	109 1/2"	120 1/4"	127 1/2"	138 1/4"	151 1/2"
14' 0"	5 1/2"	18 1/4"	25 1/2"	39 1/4"	46 1/2"	60 1/4"	67 1/2"	81 1/4"	88 1/2"	102 1/4"	109 1/2"	123 1/4"	130 1/2"	144 1/4"	157 1/2"

* ADDITIONAL STRUTS MAY BE ADDED TO DOOR WHEN GLAZED FOR COUNTERBALANCE PURPOSES

TABLE 2

DOOR HEIGHT	SECTION HEIGHTS							
	Btm	#2	#3	#4	#5	#6	#7	#8
14' 0"	21"	21"	21"	21"	21"	21"	21"	21"
13' 6"	21"	21"	21"	21"	21"	18"	18"	21"
13' 0"	21"	21"	21"	18"	18"	18"	18"	21"
12' 6"	21"	18"	18"	18"	18"	18"	18"	21"
12' 0"	21"	21"	21"	21"	21"	18"	21"	
11' 6"	21"	21"	21"	18"	18"	18"	21"	
11' 0"	21"	18"	18"	18"	18"	18"	21"	
10' 6"	21"	21"	21"	21"	21"	21"		
10' 0"	21"	21"	21"	18"	18"	21"		
9'6"	21"	18"	18"	18"	18"	21"		
9' 0"	18"	18"	18"	18"	18"	18"		
8' 6"	21"	21"	21"	18"	21"			
8' 0"	21"	18"	18"	18"	21"			
7' 6"	18"	18"	18"	18"	18"			
7' 0"	21"	21"	21"	21"				
6' 6"	21"	18"	18"	21"				

TABLE 3

DOOR HEIGHT	TRACK ATTACHMENT								SPLICE
	A	B	C	D	E	F	G	H	S
6' 6"	10"	21"	39"	57"					70"
7'	10"	21"	42"	63"					76"
7' 6"	10"	18"	36"	54"	72"				82"
8'	10"	21"	39"	57"	75"				88"
8' 6"	10"	21"	42"	63"	81"				94"
9'	10"	18"	36"	54"	72"	90"			100"
9' 6"	10"	21"	39"	57"	75"	93"			106"
10'	10"	21"	42"	63"	81"	99"			112"
10' 6"	10"	21"	42"	63"	84"	105"			118"
11'	10"	21"	39"	57"	75"	93"	111"		124"
11' 6"	10"	21"	42"	63"	81"	99"	117"		130"
12'	10"	21"	42"	63"	84"	105"	123"		136"
12'6"	10"	21"	39"	57"	75"	93"	111"	129"	142"
13'	10"	21"	42"	63"	81"	99"	117"	135"	148"
13' 6"	10"	21"	42"	63"	84"	105"	123"	141"	154"
14'	10"	21"	42"	63"	84"	105"	126"	147"	160"

ALL TRACK ATTACHMENT SPACING +/- 1.5" ALLOWED WITH SYP OR SPF NO. 2 OR BETTER ONLY

TABLE 4

Section Width (ft)	Panel Type	Center Stile Locations (Measured from Left Edge) 1st (in)	2st (in)	3rd (in)	4th (in)	5th (in)
10' 0	Short	48.41	71.59			
10' 0	Long	30.00	60.00	90.00		
10' 0	Oak Summit	30.63	60.00	89.38		
12' 0	Short	48.81	72.00	95.19		
12' 0	Long	49.63	72.00	94.38		
12' 0	Oak Summit	48.31	72.00	95.69		
12' 2	Short	49.64	73.00	96.36		
12' 2	Long	50.08	73.00	95.92		
12' 2	Oak Summit	49.06	73.00	96.94		
12' 4	Short	50.64	74.00	97.36		
12' 4	Long	51.08	74.00	96.92		
12' 4	Oak Summit	49.81	74.00	98.19		
12' 6	Short	50.67	75.00	99.33		
12' 6	Long	51.17	75.00	98.83		
12' 6	Oak Summit	50.56	75.00	99.44		
12' 8	Short	51.67	76.00	100.33		
12' 8	Long	52.10	76.00	99.90		
12' 8	Oak Summit	51.31	76.00	100.69		
12' 10	Short	52.25	77.00	101.75		
12' 10	Long	53.10	77.00	100.90		
12' 10	Oak Summit	52.06	77.00	101.94		
13' 0	Short	53.00	78.00	103.00		
13' 0	Long	54.10	78.00	101.90		
13' 0	Oak Summit	52.81	78.00	103.19		
13' 2	Short	54.00	79.00	104.00		
13' 2	Long	55.10	79.00	102.90		
13' 2	Oak Summit	53.56	79.00	104.44		
13' 4	Short	54.40	80.00	105.60		
13' 4	Long	54.90	80.00	105.10		
13' 4	Oak Summit	54.31	80.00	105.69		
13' 6	Short	55.40	81.00	106.60		
13' 6	Long	55.90	81.00	106.10		
13' 6	Oak Summit	55.06	81.00	106.94		
13' 8	Short	56.40	82.00	107.60		
13' 8	Long	56.63	82.00	107.38		
13' 8	Oak Summit	55.81	82.00	108.19		
13' 10	Short	57.16	83.00	108.71		
13' 10	Long	57.17	83.00	108.83		
13' 10	Oak Summit	56.56	83.00	109.44		
14' 0	Short	57.76	84.00	110.11		
14' 0	Long	58.63	84.00	109.38		
14' 0	Oak Summit	57.31	84.00	110.69		
14' 2	Short	58.85	85.00	111.41		
14' 2	Long	59.17	85.00	110.83		
14' 2	Oak Summit	58.06	85.00	111.94		
14' 4	Short	59.16	86.00	112.71		
14' 4	Long	60.17	86.00	111.83		
14' 4	Oak Summit	58.81	86.00	113.19		
14' 6	Short	59.86	87.00	114.01		
14' 6	Long	61.17	87.00	112.83		
14' 6	Oak Summit	59.56	87.00	114.44		
14' 8	Short	60.56	88.00	115.31		
14' 8	Long	44.81	^66.41	88.00	^109.59	131.19
14' 8	Oak Summit	60.31	88.00	115.69		
14' 10	Short	61.26	89.00	116.61		
14' 10	Long	45.60	^67.30	89.00	^110.70	132.40
14' 10	Oak Summit	61.06	89.00	116.94		
15' 0	Short	61.94	^75.97	90.00	^103.97	117.94
15' 0	Long	46.60	^68.30	90.00	^111.70	133.40
15' 0	Oak Summit	33.63	^61.81	90.00	^118.19	146.38
15' 2	Short	62.66	^76.83	91.00	^105.11	119.21
15' 2	Long	47.60	^69.30	91.00	^112.70	134.40
15' 2	Oak Summit	34.13	^62.56	91.00	^119.44	147.88
15' 4	Short	53.60	79.20	104.80	130.40	
15' 4	Long	47.25	^69.63	92.00	^114.38	136.75
15' 4	Oak Summit	34.63	^63.31	92.00	^120.69	149.38
15' 6	Short	46.62	^69.81	93.00	^116.19	139.38
15' 6	Long	47.60	^70.30	93.00	^115.70	138.40
15' 6	Oak Summit	47.42	^70.21	93.00	^115.79	138.58
15' 8	Short	47.62	^70.81	94.00	^117.19	140.38
15' 8	Long	48.60	^71.30	94.00	^116.70	139.40
15' 8	Oak Summit	48.02	^71.01	94.00	^116.99	139.98
15' 10	Short	48.62	^71.81	95.00	^118.19	141.38
15' 10	Long	49.17	^72.08	95.00	^117.92	140.83
15' 10	Oak Summit	48.62	^71.81	95.00	^118.19	141.38
16' 0	Short	49.62	^72.81	96.00	^119.19	142.38
16' 0	Long	50.60	^73.30	96.00	^118.70	141.40
16' 0	Oak Summit	48.42	^72.21	96.00	^119.79	143.58

^ Stiles do not need to be hinged

REV	DESCRIPTION OF REVISIONS	DATE	BY
A	WIND SPEED TABLE & TRACK CONFIGURATIONS	04/30/12	RLR
B	ADDED GLAZING NOTE	12/20/12	RLR

MAX SIZE
16' WIDTH
14' HEIGHT
(DOOR HEIGHT SUBJECT TO WEIGHT LIMITATIONS)

DESIGN LOADS
+25.6 PSF
−29.1 PSF

TEST LOADS
+38.4 PSF
−43.7 PSF

LARGE MISSILE IMPACT RESISTANT

Thomas L. Shelmerdine, PE (TX PE #85829)
Structural Solutions, PA (TX Firm #F-004063)

STATE OF TEXAS
THOMAS L. SHELMERDINE
85829
LICENSED
PROFESSIONAL ENGINEER
TX

dba Structural Solutions of North Carolina, Inc.
5921-G W. Friendly Ave., Greensboro, NC 27410

Amarr

165 CARRIAGE COURT WINSTON-SALEM, N.C. 27105

MODEL #650 OAK SUMMIT SERIES 1000 & 2000
MODEL #600 STRATFORD SERIES 1000 & 2000
MODEL #950 HERITAGE SERIES 1000 & 2000

SIZE	DRAWN BY	BHG	DATE	11/13/09	DRAWING NUMBER
B	CHECKED BY	CBT	DATE	11/13/09	IRC-6016-130-15-I
					SHEET 3 OF 3