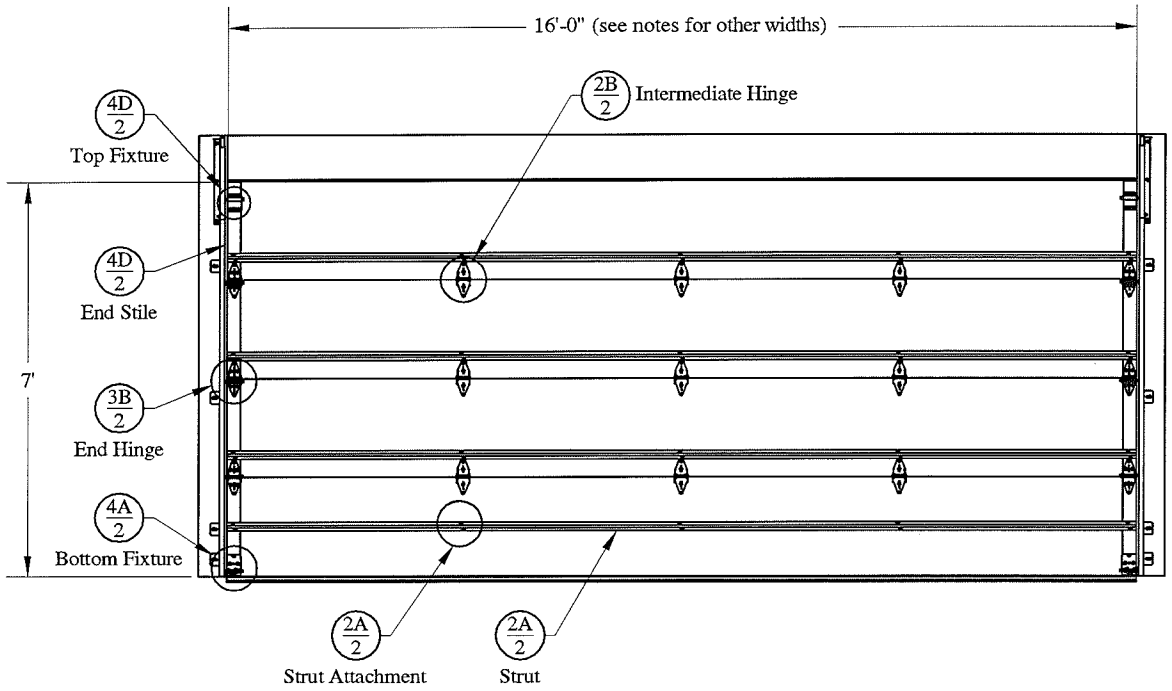

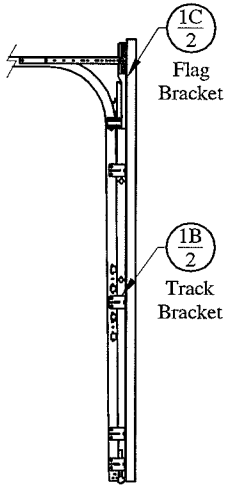

Door Height	Section Quantity	Strut Quantity	Trk Brkt Per Side
6'-6" to 7'-0"	4	4	4
7'-6" to 8'-0"	5	5	5
8'-3" to 8'-9"	5	5	5
9'-0" to 10'-6"	6	6	6
10'-9" to 12'-3"	7	7	7
12'-6" to 14'-0"	8	8	8
14'-3" to 15'-9"	9	9	9
16'-0" to 17'-6"	10	10	10
17'-9" to 19'-3"	11	11	11
19'-6" to 20'-0"	12	12	12

Track bracket quantities shown are for use with grade 2 or better southern pine jambs. When using softer wood species like spruce-pine-fir (SPF) use the quantity of track brackets specified in the chart plus one track bracket per side.

Supplemental Instructions contain details for doors up to 20'-0" high. These are required in addition to this drawing for installation. Always use supplemental instructions in addition to this drawing during door installation.

This door has been evaluated per ASCE 7-02 & 7-05 as referenced by 2006 IBC 1609 & 2006 IRC 301, in accordance with ASTM E330-02 & ANSI/DASMA 108-02, 108-05 and for windborne debris in accordance with ASTM E1886-05/E1996-09 & ANSI/DASMA 115-05 (9 pound missile)
Design Pressures (DP) typically meet requirements for the following exposure B wind speeds.
These exposure B wind speeds are for 7' high doors on buildings with mean roof height less than 30 feet.

Door	Without Windows		Backer
Width	Design Pressure	Exposure B	Plates
16'-00"	22.2 / - 24.7 (psf)	121 (mph)	3
15'-00"	22.2 / - 24.7 (psf)	120 (mph)	3
14'-00"	22.2 / - 24.7 (psf)	120 (mph)	3
13'-00"	22.2 / - 24.7 (psf)	119 (mph)	3
12'-00"	22.2 / - 24.7 (psf)	119 (mph)	2
10'-02"	22.2 / - 24.7 (psf)	118 (mph)	2

Backer plate quantity is minimum per section, not including backer plates at each end of sections.

Supporting structural elements to be designed by registered professional engineer for specified wind loads. If door is not electrically operated, a lock must be installed.
Door height: 20'-0" max
Section height: 21" max

Professional Engineer's seal provided only for verification of windload construction details

John E. Scates 4/1/13

John E. Scates, P.E.
3121 Fairgate Drive
Carrollton, Texas 75007
TXPE 56308, F-2203

C.H.I. OVERHEAD DOORS
SCALE nts
DATE 3-18-2013
Models: 221X, 228X, 421X, 428X, 521X, 528X, 591X, 598X
22.2 (psf) / - 24.7 (psf) at 10'-02" through 22.2 (psf) / - 24.7 (psf) at 16'-00"
C.H.I. Drawing: TZ4i-16-02513
page 1_of_2

Strut (if applicable) not shown for clarity.

Details on some views may have been omitted for clarity.

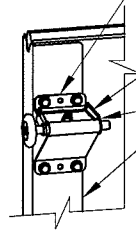

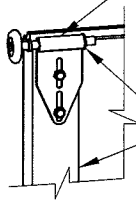

Optional low head room top bracket

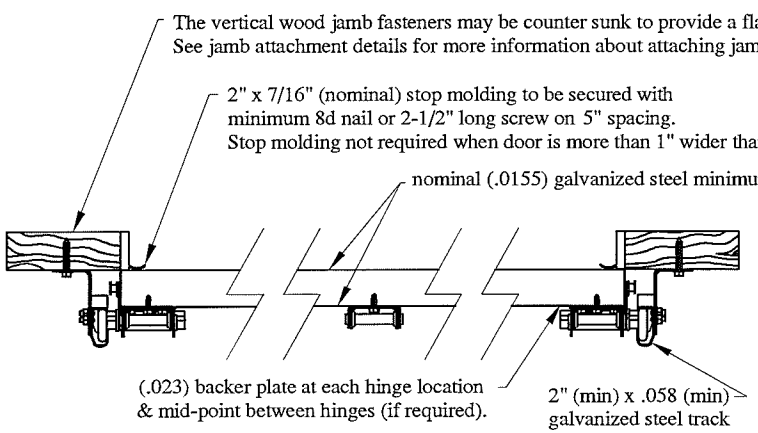

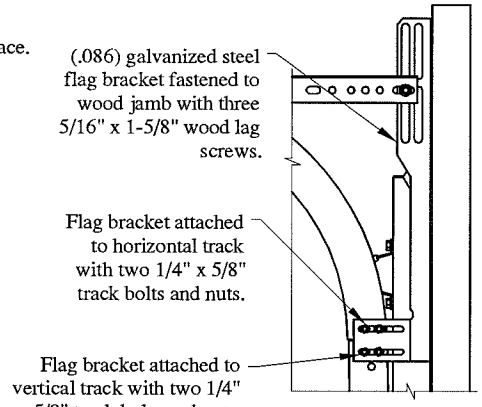

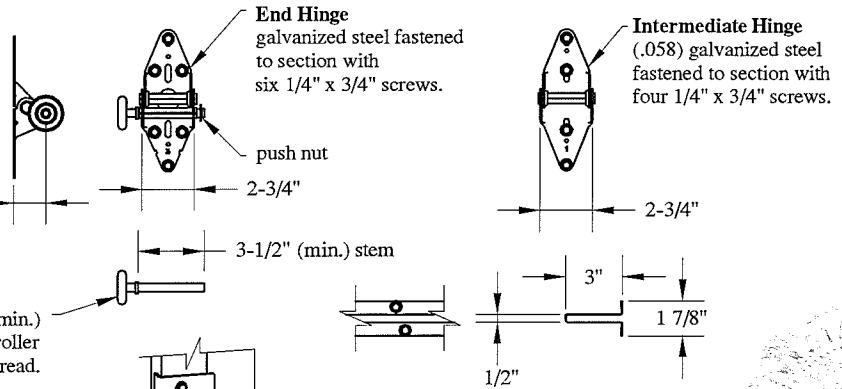

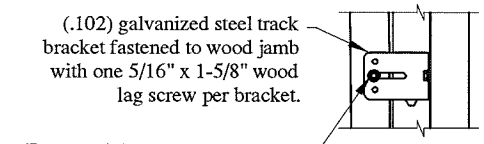

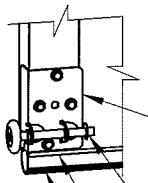

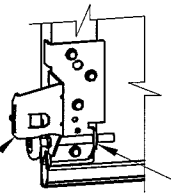

Optional low head room bottom bracket

(.051) 50 ksi galvanized steel 3" strut attached with two 1/4" x 3/4" screws per stile or hinge plate.

John E. Scates 4/1/13

John E. Scates, P.E.
3121 Fairgate Drive
Carrollton, Texas 75007
TXPE 56308, F-2203

Professional Engineer's seal provided only for verification of windload construction details

C.H.I. OVERHEAD DOORS	SCALE nts DATE 3-18-2013
Models: 221X, 228X, 421X, 428X, 521X, 528X, 591X, 598X	
22.2 (psf) / - 24.7 (psf) at 10'-02" through 22.2 (psf) / - 24.7 (psf) at 16'-00"	
C.H.I. Drawing: TZ4i-16-02513 page_2_of_2	