GENERAL NOTES:

1– ROLL–UP DOOR SHOWN ON THIS PRODUCT EVALUATION DOCUMENT (P.E.D.) HAS BEEN VERIFIED FOR COMPLIANCE IN ACCORDANCE WITH THE 2006 EDITIONS OF THE INTERNATIONAL BUILDING CODE, (I.B.C.) AND INTERNATIONAL RESIDENTIAL CODE, (I.R.C.) WITH THE 2006 TEXAS REVISIONS, EFFECTIVE JANUARY 1, 2008. THIS PRODUCT'S MAY BE INSTALLED AT SEAWARD AND INLAND AREAS, AS DEFINED BY THE TEXAS DEPARTMENT OF INSURANCE. DESIGN WIND LOADS SHALL BE DETERMINED AS PER SECTION 1609 OF THE OF THE INTERNATIONAL BUILDING CODE, FOR A BASIC WIND SPEED AS REQUIRED BY THE JURISDICTION WHERE SHUTTER WILL BE INSTALLED, AND FOR A DIRECTIONALITY FACTOR Kd=0.85, IN ACCORDANCE W/ ASCE 7–05 STANDARD IN ORDER TO VERIFY THAT COMPONENTS AND ANCHORS ON THIS P.E.D. AS TESTED WERE NOT OVER STRESSED, A 33% INCREASE IN ALLOWABLE STRESS FOR WIND LOADS WAS NOT USED IN THEIR ANALYSIS.
ROLL–UP DOOR'S ADEQUACY FOR IMPACT AND WIND RESISTANCE HAS BEEN VERIFIED IN ACCORDANCE WITH SECTIONS 1609.1.2 AND R301.1.3 OF THE INTERNATIONAL AND RESIDENTIAL BUILDING CODE, RESPECTIVELY AS PER FENESTRATION TESTING LABORATORY, INC. REPORT # 6458, AS PER ASTM E 1886–05, E 1996–05 AND E 330–02 STANDARDS, QUALIFYING INSTALLATIONS FOR WIND ZONES 1, 2, 3 & 4, MISSILE TYPE D, APPLICABLE TO BASIC PROTECTION ONLY, FOR INSTALLATIONS AT NON ESSENTIAL FACILITIES AS DEFINED BY SECTIONS 6.2.1.1, 6.2.1.2 AND 8.3 OF ASTM E 1996–04.

2– SLAT TO BE A.S.T.M. A–653 GR 40 STRUCTURAL QUALITY STEEL WITH MIN Fy = 47.0 ksi. AND G–90 GALVANIZING PER A.S.T.M. A–653, OR A.I.S.I. 304 SERIES STAINLESS STEEL MANUFACTURED WITH A MINIMUM YIELD STRENGTH OF Fy = 47.0 ksi.

3– ALL STEEL ANGLES TO BE A.S.T.M. A–36 DESIGNATION, SHOP PRIMED AGAINST CORROSION PRIOR TO INSTALLATION. PAINT TO CONFORM TO FEDERAL SPECIFICATIONS CORRESPONDING TO RED OXIDE PAINT OR EQUAL.

4– WINDLOCKS TO BE "MALLEABLE IRON" Fy = 42 ksi OR A.I.S.I. DESIGNATION STEEL W/ Fy = 40 ksi., CHROME OR NICKEL PLATED.

5– ALL ASSEMBLY BOLTS TO BE S.A.E. GRADE 2 CADMIUM PLATED OR GALVANIZED STEEL.

6– STEEL WINDBARS TO BE A.S.T.M. A–36 DESIGNATION, SHOP PRIMED PRIOR TO INSTALLATION. PAINT TO CONFORM TO FEDERAL SPECIFICATIONS CORRESPONDING TO RED OXIDE PAINT OR EQUAL.

7– HOOD TO BE 24 GA. A.S.T.M. A–653 DESIGNATION G–90 FINISH TYPE COATING.

8– ALL RIVETS TO BE A.I.S.I. C1006 SPHERODIZED ANNEALED ALUMINUM LOW CARBON COLD HEADING QUALITY STEEL, ZINC PLATED, W/ 55.0 ksi. MINIMUM TENSILE STRENGTH, AS MANUFACTURED BY UNIVERSAL RIVET, INC.

9– ALL SCREWS & BOLTS INSTALLED AT SEAWARD AREAS TO BE STAINLESS STEEL 304 OR 316 AISI SERIES AND MEET ASTM A167, OR HOT DIPPED GALVANIZED (AFTER FABRICATION) CARBON STEEL AS PER ASTM A123 OR ASTM A153, OR HOT DIPPED GALVANIZED OR GALVANNEALED (PRIOR TO FABRICATION) AND MEET ASTM A653 WITH 50 KSI YIELD STRENGTH AND 90 KSI TENSILE STRENGTH, PER 2006 TEXAS REVISIONS TO SECTION 1716.1.1 OF THE 2006 I.B.C. AND SECTION R325.1.1 OF THE 2006 I.R.C.

10– ALL SCREWS & BOLTS INSTALLED AT INLAND I AREAS TO BE STAINLESS STEEL 304 OR 316 AISI SERIES AND MEET ASTM A167, OR HOT DIPPED GALVANIZED (AFTER FABRICATION) CARBON STEEL AS PER ASTM A123 OR ASTM A153, OR HOT DIPPED GALVANIZED OR GALVANNEALED (PRIOR TO FABRICATION) AND MEET ASTM A653; HOT DIP GALVANIZED OR ELECTRO GALVANIZED PER ASTM A641, MECHANICALLY DEPOSITED ZINC COATINGS PER ASTM B695 OR ELECTRO DEPOSITED ZINC COATINGS PER ASTM B633, PER THE 2006 TEXAS REVISIONS TO SECTION 1716.1.2 OF THE 2006 I.B.C. AND TO SECTION R325.1.2 OF THE 2006 I.R.C.

11– CONCRETE ANCHORS TO BE AS MANUFACTURED BY POWERS FASTENERS, INC, AND SHALL BE INSTALLED FOLLOWING ALL OF THE RECOMMENDATIONS AND SPECIFICATIONS OF THE ANCHOR'S MANUFACTURER.

12– ALL WELDING TO CONFORM TO AMERICAN WELDING SOCIETY'S AWS D1.1 REGULATIONS. USE A.W.S A5.1 OR A5.5 E60XX ELECTRODES MIN. 3/16" FILLET SIZE.

13– INSULATION MATERIAL SHALL BE EPS–EXPANDED POLYSTYRENE INSULATION, MANUFACTURED BY DYPLAST PRODUCTS LLC., NOTICE OF ACCEPTANCE # 07–1107.08.

14– IT SHALL BE THE RESPONSIBILITY OF THE CONTRACTOR TO VERIFY THAT THE EXISTING STRUCTURE IS DESIGNED TO SUPPORT Vx AND Vy FORCES AT BOTH JAMBS.
SEE SCHEDULE ON SHEET 3 OF 3, FOR Vx & Vy VALUES.

15– ROLL–UP MECHANISM NOT PART OF THIS APPROVAL.

16–(A) THIS P.E.D. PREPARED BY THIS ENGINEER IS GENERIC AND DOES NOT PROVIDE INFORMATION FOR A SITE SPECIFIC PROJECT; I.E. WHERE THE SITE CONDITIONS DEVIATE FROM THE P.E.D.
(B) CONTRACTOR TO BE RESPONSIBLE FOR THE SELECTION, PURCHASE AND INSTALLATION OF THIS PRODUCT BASED ON THIS P.E.D. PROVIDED HE/SHE DOES NOT DEVIATE FROM THE CONDITIONS DETAILED ON THIS DOCUMENT. CONSTRUCTION SAFETY AT SITE IS THE CONTRACTOR'S RESPONSIBILITY.
(C) THIS P.E.D. WILL BE CONSIDERED INVALID IF MODIFIED.
(D) SITE SPECIFIC PROJECTS SHALL BE PREPARED BY THE "TEXAS LICENSED PROFESSIONAL ENGINEER WHO IS THE ENGINEER OF RECORD (E.O.R.) FOR THE PROJECT OR THE TEXAS LICENSED PROFESSIONAL ENGINEER APPOINTED BY THE COMMISSIONER OF THE TEXAS DEPARTMENT OF INSURANCE TO DETERMINE ELIGIBILITY FOR TEXAS WINDSTORM INSURANCE ASSOCIATION (TWIA) WINDSTORM AND HAIL INSURANCE PURSUANT TO THE TEXAS INSURANCE CODE ARTICLE 21.49 SECTION 6A" WHO WILL BE RESPONSIBLE FOR THE PROPER USE OF THE P.E.D.

(E) THIS P.E.D. SHALL BEAR THE DATE AND ORIGINAL SEAL AND SIGNATURE OF THE PROFESSIONAL ENGINEER OF RECORD THAT PREPARED IT.

17– ROLL–UP DOOR MANUFACTURER'S LABEL SHALL BE LOCATED ON A READILY VISIBLE LOCATION AT ROLL–UP DOOR. ONE LABEL SHALL BE PLACED FOR EVERY OPENING. LABELING SHALL BE AS FOLLOWS:

Rolling Door Industries, LLC Miami, FL Product: 14'–2" Maximum Wide 24 Gage Slat HV–1460 Roll–Up Door Applicable Standards Include: ASTME–330, E–1886, E1996 Design Presure: +60/–60 psf DO NOT REMOVE LABEL	Texas Department of Insurance Evaluation Report ---------- Installation Instructions: 11–023

STATE OF TEXAS
5/23/11
P.E. SEAL/SIGNATURE/DATE

TEXAS DEPARTMENT OF INSURANCE –2006

WALTER A. TILLIT Jr. P.E.
PROFESSIONAL ENGINEER
6355 N.W. 36 STREET, STE. 305
VIRGINIA GARDENS, FL 33166
PHONE (305) 871–1530 FAX (305) 871–1531
TEXAS LIC. # 90691

14'–2" MAXIMUM WIDE, 24 GAGE SLAT
HV–1460 ROLL–UP DOOR

ROLLING DOOR INDUSTRIES, LLC.
8214 NW 64 ST
MIAMI, FL. 33166
PH: 305–599–9977 FAX: 305–599–9979

REV. No	DESCRIPTION	DATE	REV. No	DESCRIPTION	DATE
1	NOTES 16(D) AND 17	05/20/11	3	–	–
2	–	–	4	–	–

M.C.V.
DRAWN BY:

03/04/11
DATE

11–023
DRAWING No

SHEET 1 OF 3

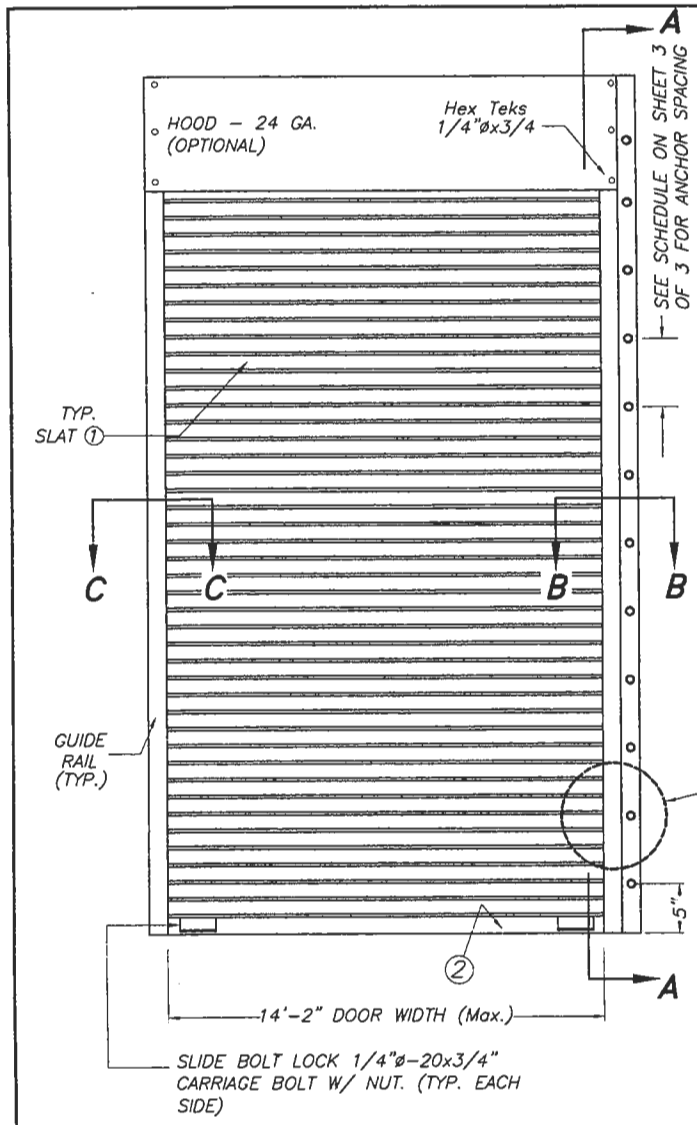

TYPICAL DOOR ELEVATION

N. T. S.

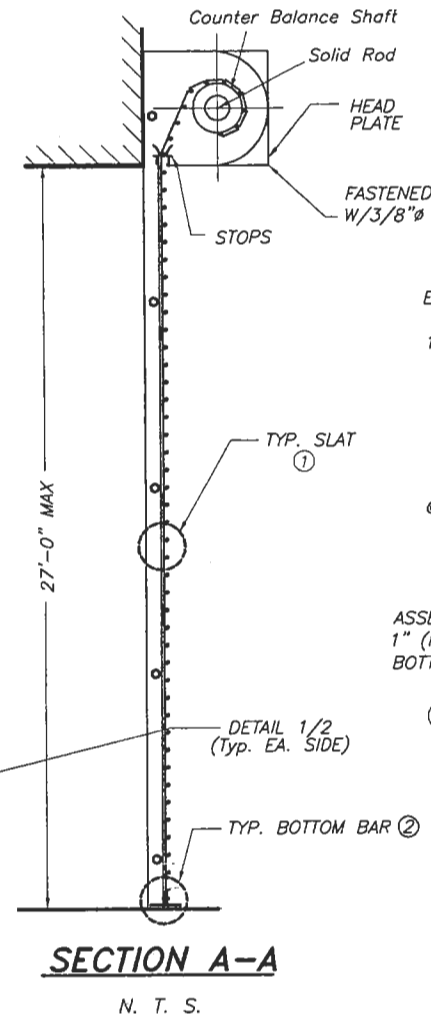

SECTION A–A

N. T. S.

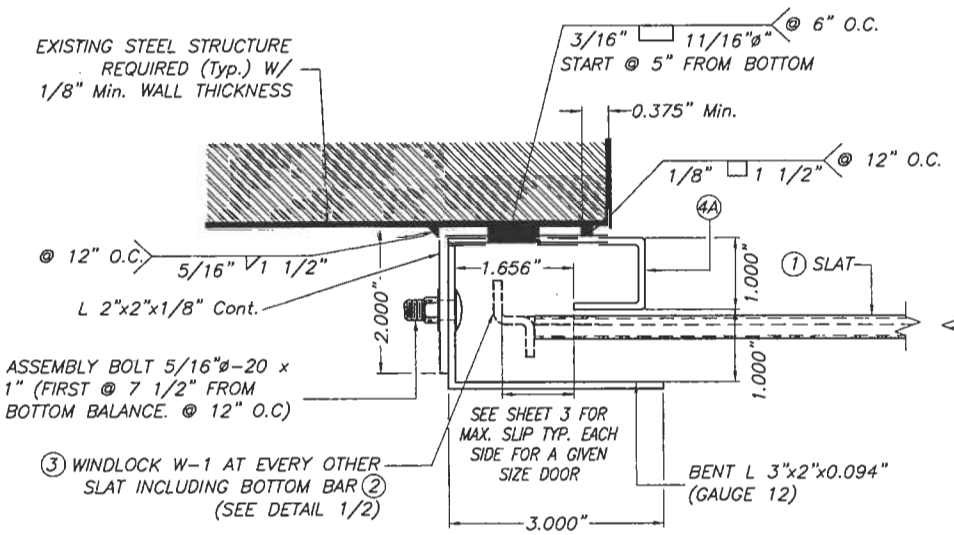

SECTION C–C

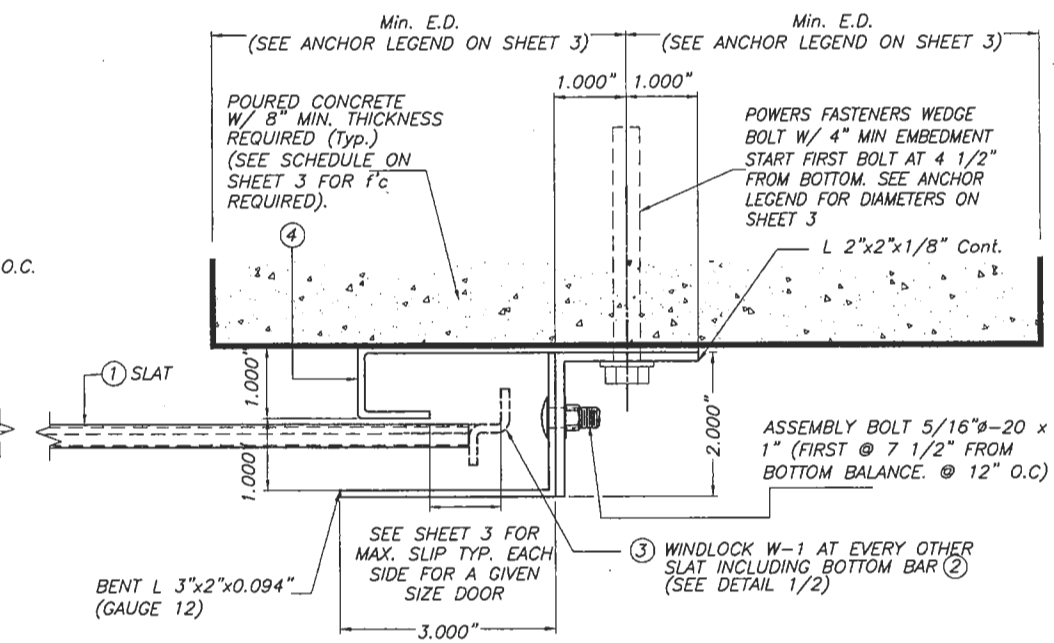

SECTION B–B

SCALE : 3/8" = 1"

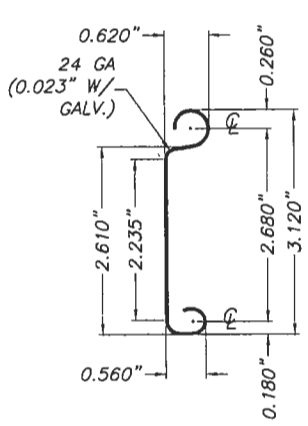

PLAIN

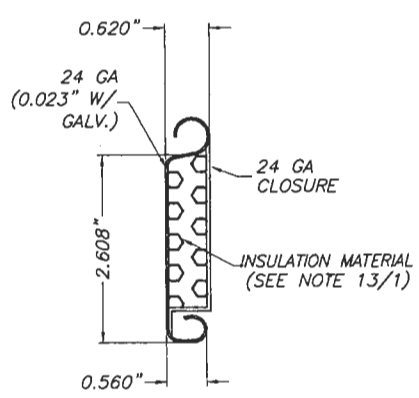

INSULATED

① FLAT SLAT

SCALE : 3/8" = 1"

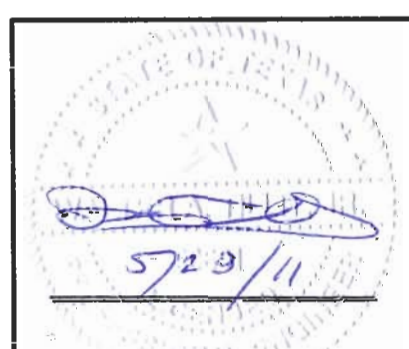

P.E. SEAL/SIGNATURE/DATE

TEXAS DEPARTMENT OF INSURANCE –2006

WALTER A. TILLIT Jr. P.E.
PROFESSIONAL ENGINEER

6355 N.W. 36 STREET, STE. 305
VIRGINIA GARDENS, FL 33166
PHONE (305) 871–1530 FAX (305) 871–1531

TEXAS LIC. # 90691

14'–2" MAXIMUM WIDE, 24 GAGE SLAT HV–1460 ROLL–UP DOOR

ROLLING DOOR INDUSTRIES, LLC.
8214 NW 64 ST
MIAMI, FL. 33166
PH: 305–599–9977 FAX: 305–599–9979

REV. No	DESCRIPTION	DATE	REV. No	DESCRIPTION	DATE
1	DOOR I.D.	05/20/11	3	–	–
2	–	–	4	–	–

M.C.V.
DRAWN BY:

03/04/11
DATE

11–023
DRAWING No

SHEET 1A OF 3

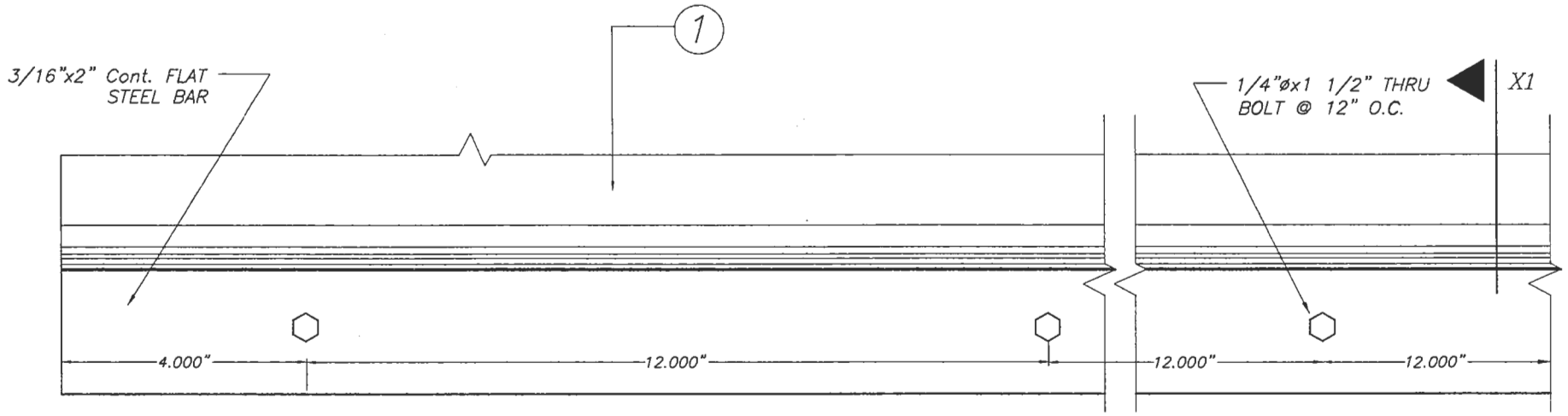

ELEVATION

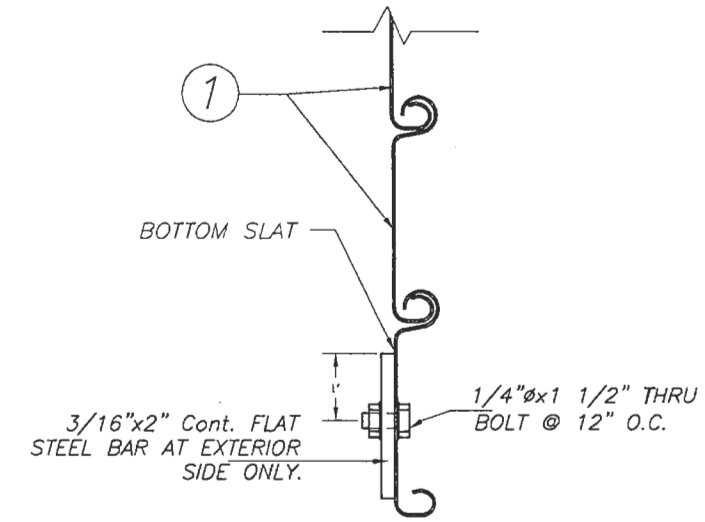

SECTION X1

2 BOTTOM BAR

SCALE : 3/8" = 1"

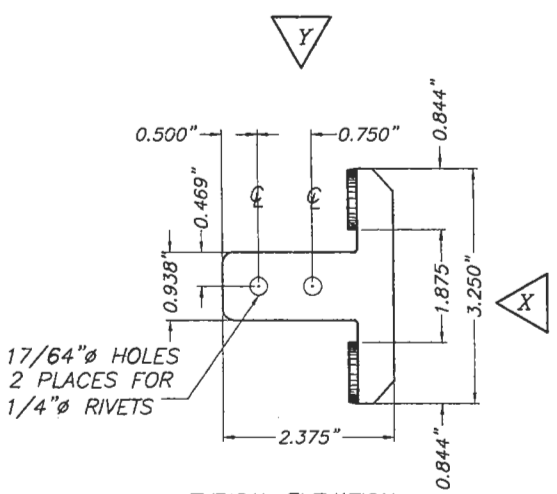

TYPICAL ELEVATION

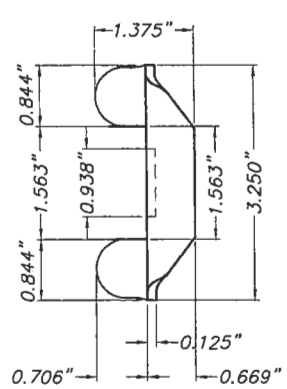

VIEW X

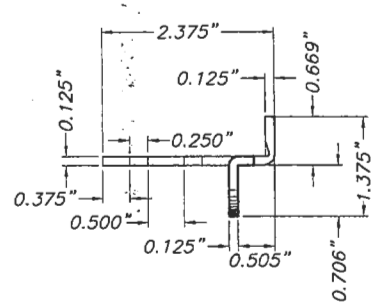

VIEW Y

3 TYPICAL WINDLOCK W – 1 DETAIL

SCALE : 3/8" = 1"

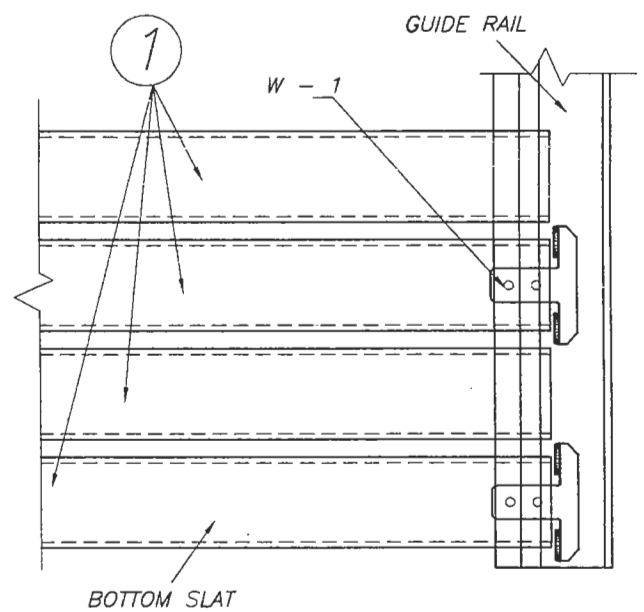

DETAIL 1 (elevation)

N.T.S.

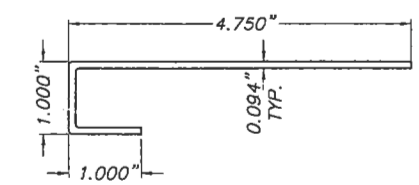

4 "J" GUIDE FOR CONCRETE WALL

SCALE : 3/8" = 1"

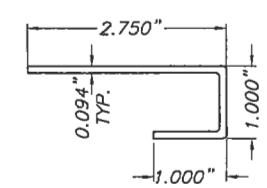

4A "J" GUIDE FOR STEEL WALL

SCALE : 3/8" = 1"

COMPONENTS

5/23/11

P.E. SEAL/SIGNATURE/DATE

TEXAS DEPARTMENT OF INSURANCE –2006

WALTER A. TILLIT Jr. P.E.
PROFESSIONAL ENGINEER

6355 N.W. 36 STREET, STE. 305
VIRGINIA GARDENS, FL 33166
PHONE (305) 871-1530 FAX (305) 871-1531

TEXAS LIC. # 90691

14'-2" MAXIMUM WIDE, 24 GAGE SLAT
HV-1460 ROLL-UP DOOR

ROLLING DOOR INDUSTRIES, LLC.
8214 NW 64 ST
MIAMI, FL. 33166
PH: 305-599-9977 FAX: 305-599-9979

REV. No	DESCRIPTION	DATE	REV. No	DESCRIPTION	DATE
1	DOOR I.D.	05/20/11	3	–	–
2	–	–	4	–	–

M.C.V.
DRAWN BY:

03/04/11
DATE

11-023
DRAWING No

SHEET 2 OF 3

Vx & Vy REACTIONS & ANCHOR SCHEDULE

DOOR WIDTH (Ft)	MAXIMUM DESIGN LOAD (PSF)	SLIP (In)	Vx (Lb/Ft)	Vy (Lb/Ft)	MAX., ANCHOR SPACING					
					ANCHOR TYPE 1 *			ANCHOR TYPE 2 *		
					FOR Min. f'c = 3000 psi CONCRETE	FOR Min. f'c = 4000 psi CONCRETE	FOR Min. f'c = 6000 psi CONCRETE	FOR Min. f'c = 3000 psi CONCRETE	FOR Min. f'c = 4000 psi CONCRETE	FOR Min. f'c = 6000 psi CONCRETE
12'-0"	+30.0, -30.0	1/4"	731	180	11"	11"	11"	11"	11"	11"
	+35.0, -35.0	1/4"	884	210	11"	11"	11"	11"	11"	11"
	+40.0, -40.0	1/4"	1034	240	11"	11"	11"	11"	11"	11"
	+45.0, -45.0	1/4"	1182	270	10"	11"	11"	11"	11"	11"
	+50.0, -50.0	1/4"	1328	300	8 1/2"	10"	10 1/2"	11"	11"	11"
	+55.0, -55.0	1/4"	1472	330	8"	9"	9 1/2"	9 1/2"	11"	11"
	+60.0, -60.0	1/4"	1614	360	7"	8"	8 1/2"	9"	10 1/2"	11"
14'-2"	+30.0, -30.0	7/16"	792	212	11"	11"	11"	11"	11"	11"
	+35.0, -35.0	7/16"	944	248	11"	11"	11"	11"	11"	11"
	+40.0, -40.0	7/16"	1095	283	10 1/2"	11"	11"	11"	11"	11"
	+45.0, -45.0	7/16"	1243	319	9"	10 1/2"	10 1/2"	11"	11"	11"
	+50.0, -50.0	7/16"	1390	354	8"	9 1/2"	9 1/2"	10"	11"	11"
	+55.0, -55.0	7/16"	1535	390	7 1/2"	8 1/2"	8 1/2"	9"	10 1/2"	11"
	+60.0, -60.0	7/16"	1679	425	7"	7 1/2"	8"	8"	9 1/2"	10 1/2"

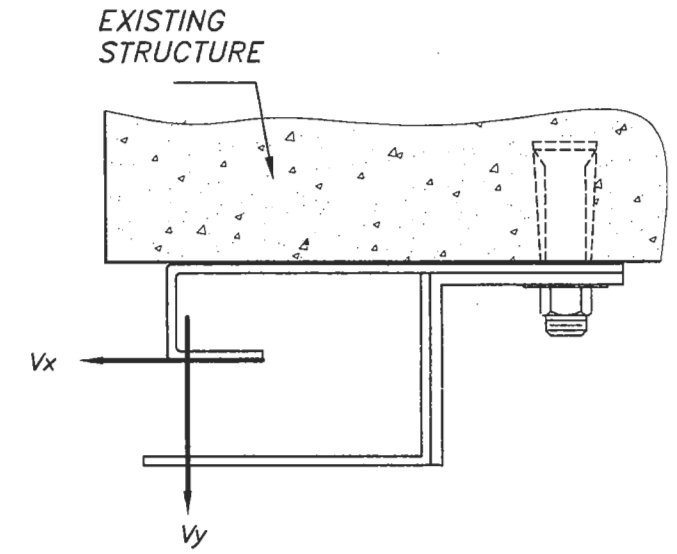

LOAD DIAGRAM

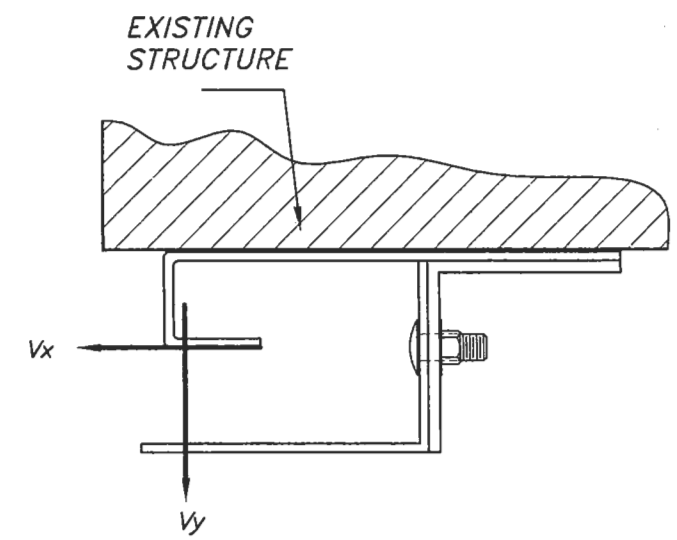

LOAD DIAGRAM

ANCHOR LEGEND

* ANCHOR TYPE 1: 1/2"ø POWERS FASTENERS, INC WEDGE BOLT, W/ 4" MIN. EMBEDMENT AND 4 1/2" MIN. EDGE DISTANCE.

ANCHOR TYPE 2: 5/8"ø POWERS FASTENERS, INC WEDGE BOLT, W/ 4" MIN. EMBEDMENT AND 6" MIN. EDGE DISTANCE.

5/23/11

P.E. SEAL/SIGNATURE/DATE

TEXAS DEPARTMENT OF INSURANCE -2006

WALTER A. TILLIT Jr. P.E.
PROFESSIONAL ENGINEER
6355 N.W. 36 STREET, STE. 305
VIRGINIA GARDENS, FL 33166
PHONE (305) 871-1530 FAX (305) 871-1531
TEXAS LIC. # 90691

14'-2" MAXIMUM WIDE, 24 GAGE SLAT HV-1460 ROLL-UP DOOR

ROLLING DOOR INDUSTRIES, LLC.
8214 NW 64 ST
MIAMI, FL. 33166
PH: 305-599-9977 FAX: 305-599-9979

REV. No	DESCRIPTION	DATE	REV. No	DESCRIPTION	DATE
1	DOOR I.D.	05/20/11	3	-	-
2	-	-	4	-	-

M.C.V.
DRAWN BY:

03/04/11
DATE

11-023
DRAWING No

SHEET 3 OF 3