L'TR	REVISION	DATE	BY	E.C.O.
*	ORIGINAL ISSUE	10/06/2010	R.M.	----

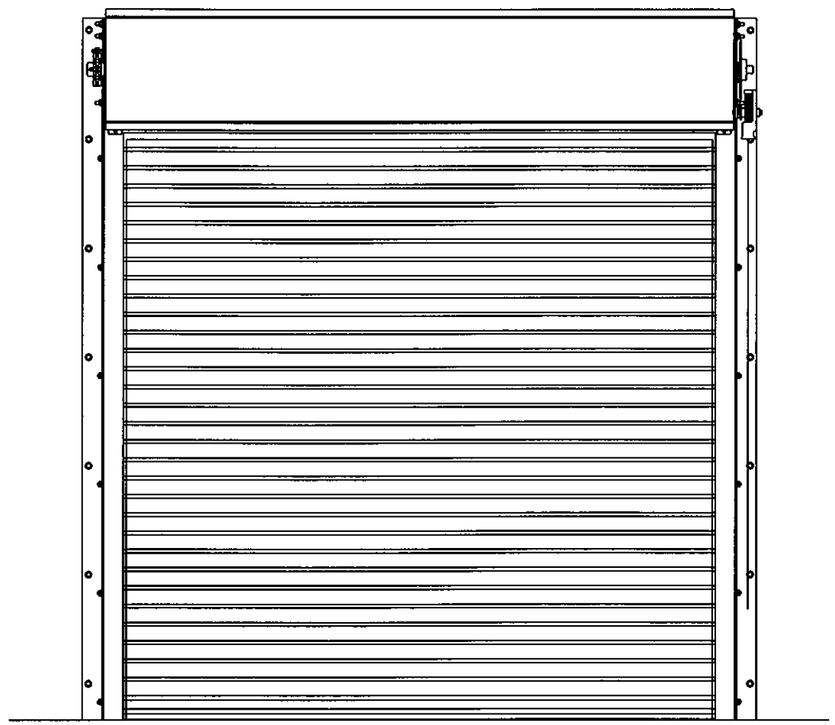

(A) **ROLL-UP DOOR FRONT ELEVATION**
N.T.S.

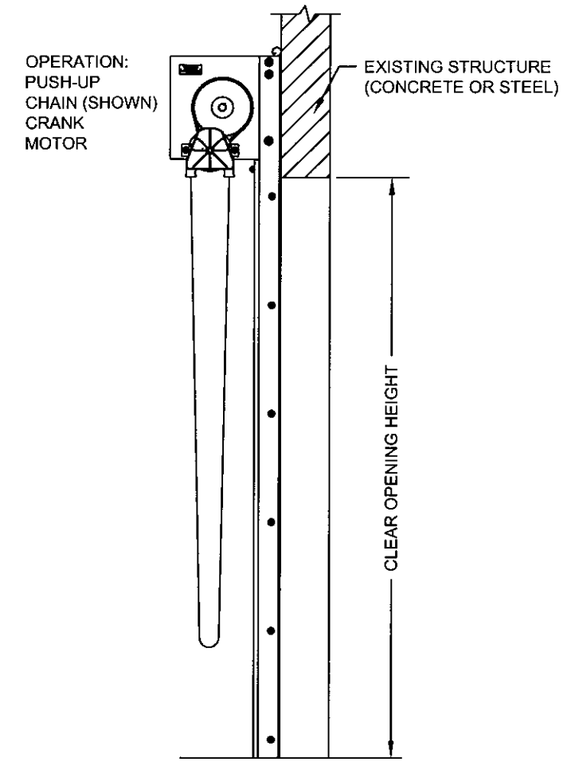

(C) **ROLL-UP DOOR SIDE ELEVATION**
N.T.S.

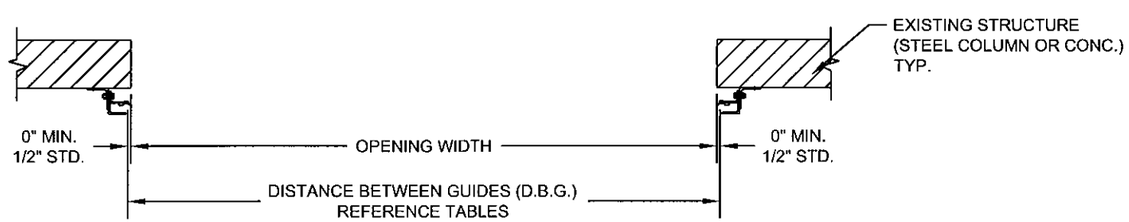

(B) **ROLL-UP DOOR PLAN VIEW**
N.T.S.

Clopay

CLOPAY CORPORATION
8585 DUKE BOULEVARD
MASON, OH 45040

TITLE

TDI WINDLOAD CONFIGURATIONS INSULATED ROLLING DOOR

SIZE	DRAWN	DWG NO	REV
C	R. MAGGIO	16-43 TDI TD	*

SCALE 1:16 SHEET 1 OF 16

L'TR	REVISION	DATE	BY	E.C.O.
*	ORIGINAL ISSUE	10/06/2010	R.M.	----

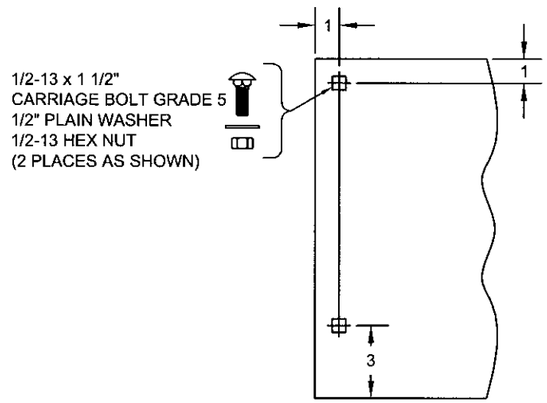

(D) **THRU 6" Ø SHAFT ASSEMBLY**
14" THRU 16" COIL DIMENSION

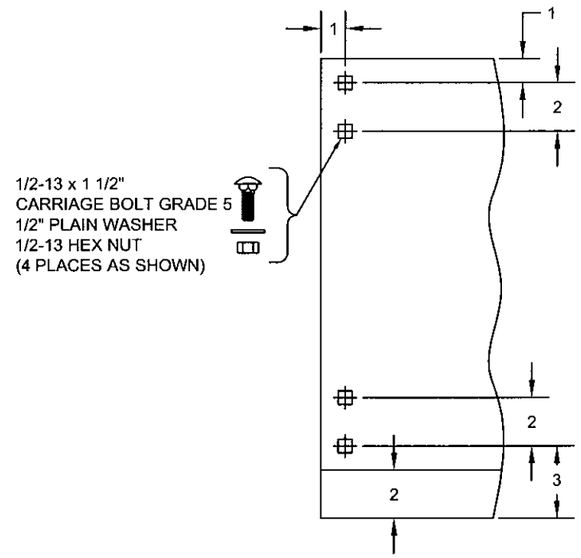

(F) **12" Ø OR LARGER SHAFT ASSEMBLY**
17" AND LARGER COIL DIMENSION

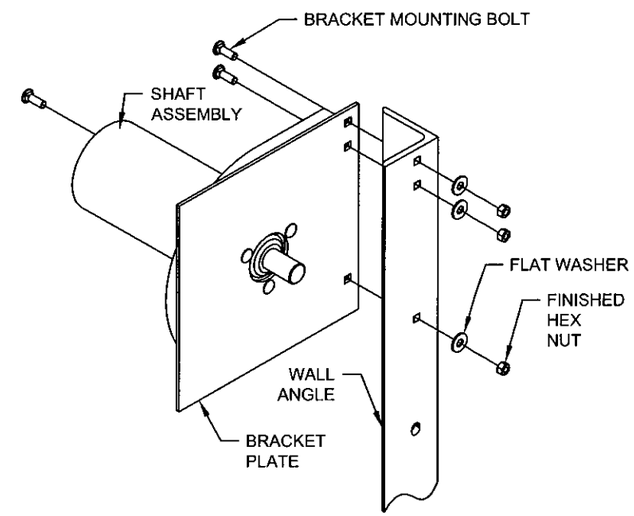

(H) **ISOMETRIC OF DOOR MOUNTING BRACKET DETAIL**
N.T.S.

NOTE: THIS ISOMETRIC VIEW DEPICTS DETAIL E TYPE BRACKET ONLY. SEE DETAILS D & F FOR OTHER TYPES OF BRACKETS.

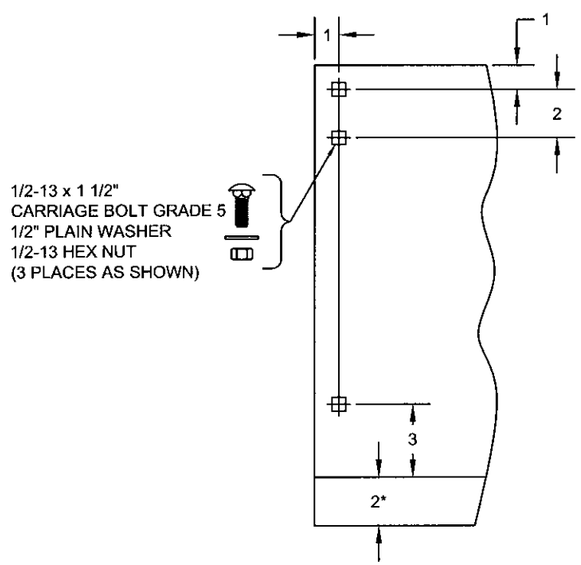

(E) **THRU 10" Ø SHAFT ASSEMBLY**
17" AND LARGER COIL DIMENSION
(*2" EXTENSION WHEN 8" AND 10" SHAFT ASSEMBLY IS SUPPLIED)

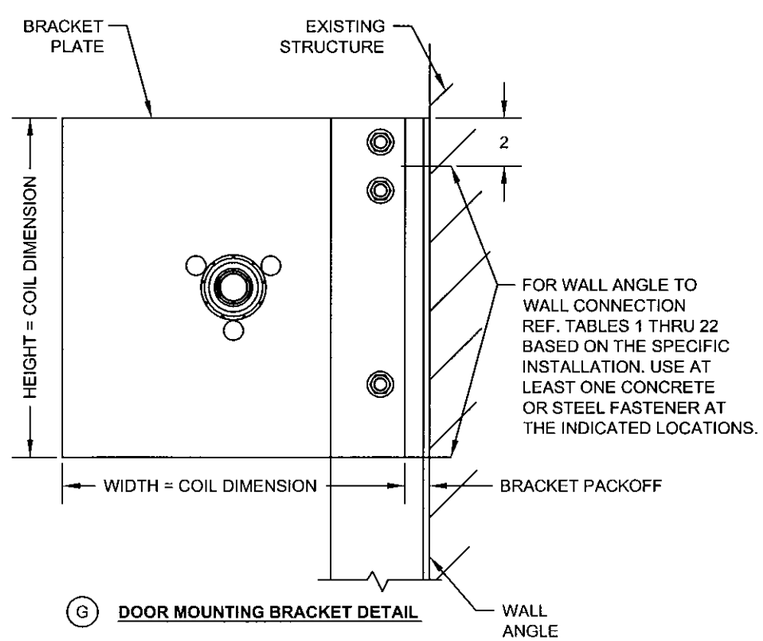

(G) **DOOR MOUNTING BRACKET DETAIL**

NOTE: WHEN MOTOR IS PROVIDED, HEIGHT OR WIDTH DIMENSION MAY INCREASE UP TO 2-1/2" BASED ON MOTOR LOCATION.

Clopay

CLOPAY CORPORATION
8585 DUKE BOULEVARD
MASON, OH 45040

TITLE

TDI WINDLOAD CONFIGURATIONS INSULATED ROLLING DOOR

SIZE	DRAWN	DWG NO	REV
C	R. MAGGIO	16-43 TDI TD	*

SCALE 1:4 SHEET 2 OF 16

L'TR	REVISION	DATE	BY	E.C.O.
*	ORIGINAL ISSUE	10/06/2010	R.M.	----

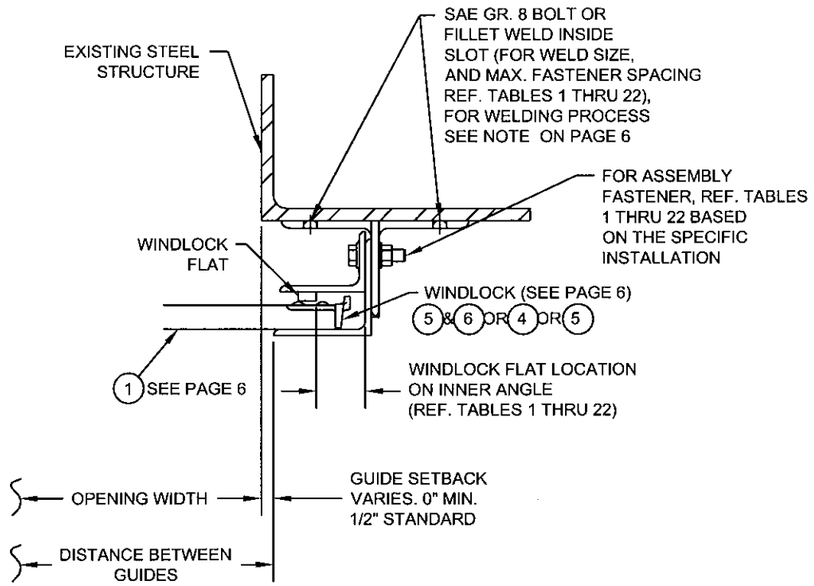

(I) **STEEL STRUCTURE ASSEMBLY (BOX OR ZEE GUIDE)**

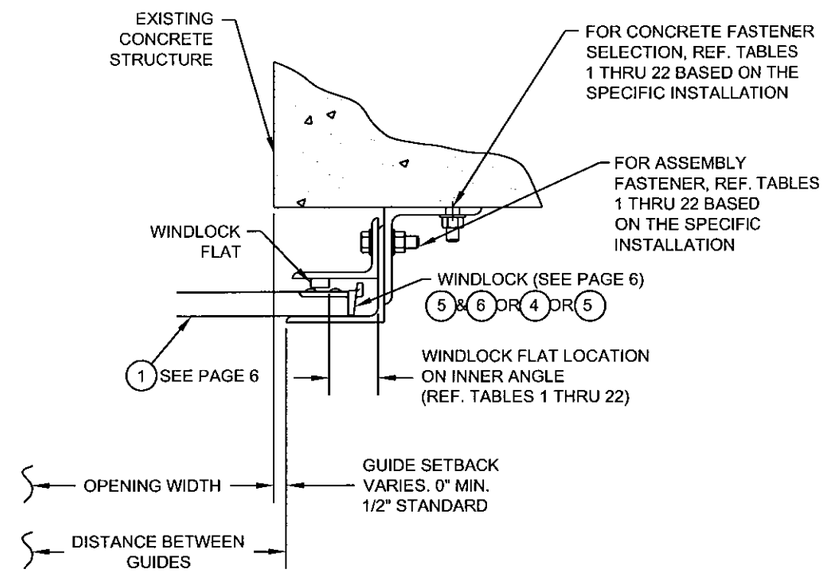

(J) **CONCRETE STRUCTURE ASSEMBLY (ZEE GUIDE)**

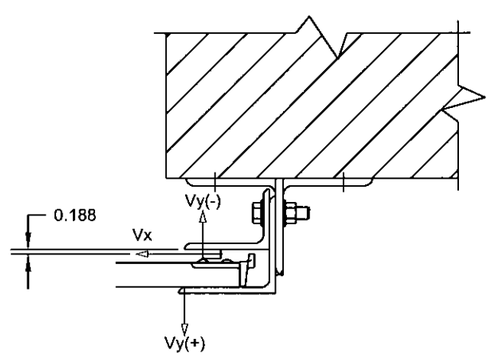

(K) **SUPERIMPOSED LOAD DIAGRAM**
LB/ft OF HEIGHT

NOTES:
1. Vx AND Vy ARE HORIZONTAL AND VERTICAL COMPONENTS OF THE REACTION, RESPECTIVELY, RESULTING FROM WIND LOADS ON THE DOOR. THE EXISTING STRUCTURE MUST BE CAPABLE OF RESISTING THE RESULTING REACTIONS AT THE WALL DUE TO THE ECCENTRICITIES OF THE FORCES.

Clopay
CLOPAY CORPORATION
8585 DUKE BOULEVARD
MASON, OH 45040

TITLE
TDI WINDLOAD CONFIGURATIONS
INSULATED ROLLING DOOR

SIZE	DRAWN	DWG NO	REV
C	R.MAGGIO	16-43 TDI TD	*

SCALE 1:4 SHEET 3 OF 16

L'TR	REVISION	DATE	BY	E.C.O.
*	ORIGINAL ISSUE	10/06/2010	R.M.	----

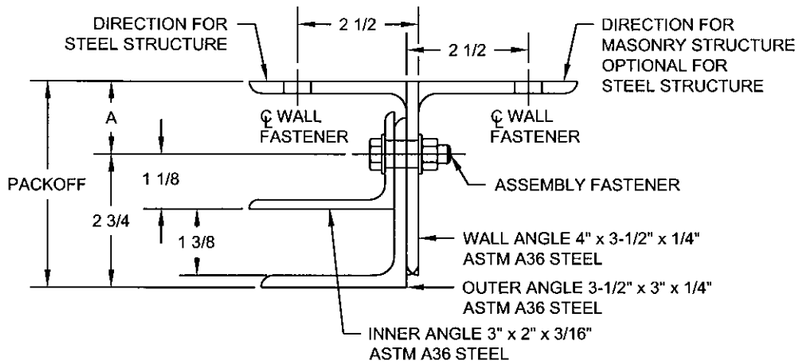

5-3/4	3
5-1/4	2-1/2
4-3/4	2
4-1/4	1-1/2
PACKOFF	A

(L) **GUIDE ASSEMBLY TYPE 344* (NON-WINDLOCK)**

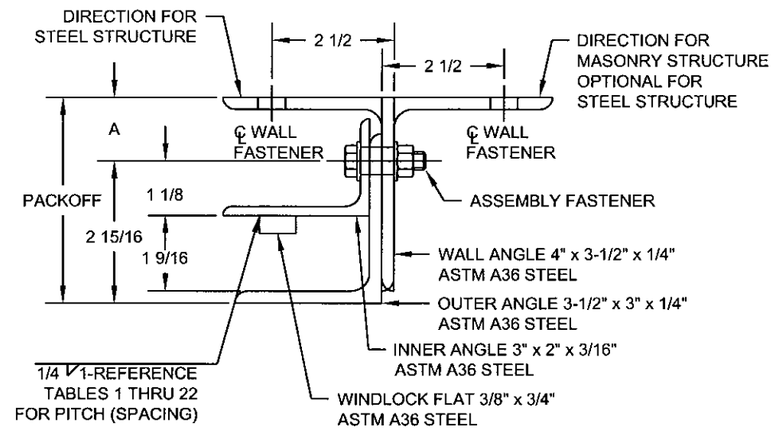

5-3/4	2-13/16
5-1/4	2-5/16
4-3/4	1-13/16
4-1/4	1-5/16
PACKOFF	A

(M) **GUIDE ASSEMBLY TYPE 344**

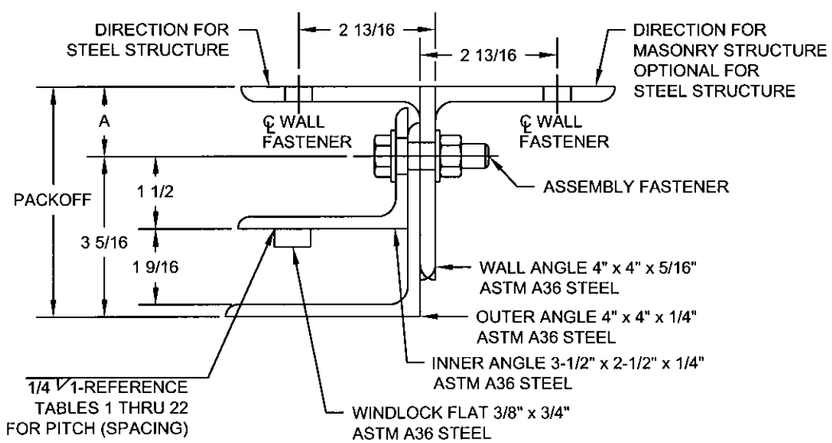

5-3/4	2-7/16
5-1/4	1-15/16
4-3/4	1-7/16
PACKOFF	A

(N) **GUIDE ASSEMBLY TYPE 445**

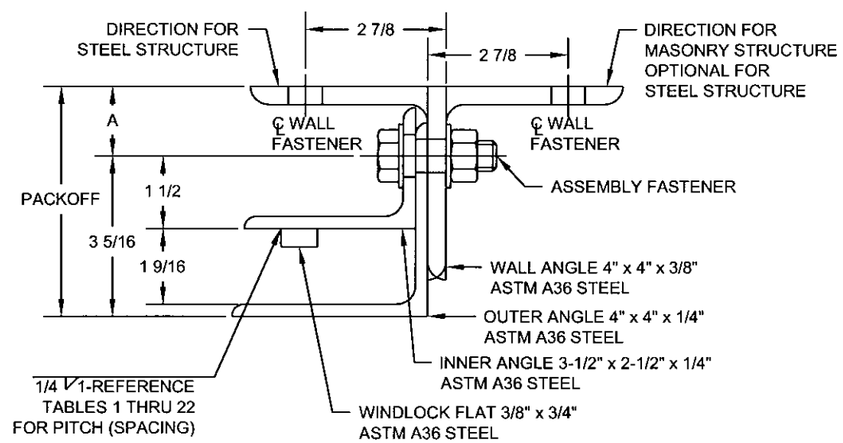

5-3/4	2-7/16
5-1/4	1-15/16
4-3/4	1-7/16
PACKOFF	A

(O) **GUIDE ASSEMBLY TYPE 446**

Clopay
CLOPAY CORPORATION
8585 DUKE BOULEVARD
MASON, OH 45040

TITLE

TDI WINDLOAD CONFIGURATIONS INSULATED ROLLING DOOR

SIZE	DRAWN	DWG NO	REV
C	R. MAGGIO	16-43 TDI TD	*

SCALE 1:2 SHEET 4 OF 16

L'TR	REVISION	DATE	BY	E.C.O.
*	ORIGINAL ISSUE	10/06/2010	R.M.	----

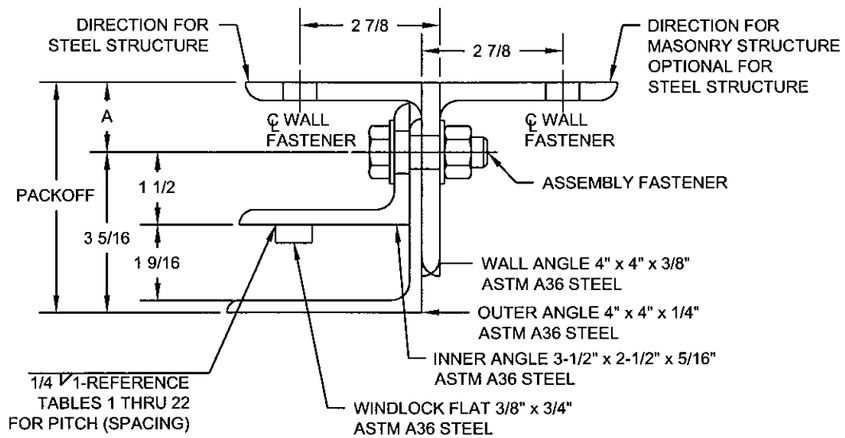

5-3/4	2-7/16
5-1/4	1-15/16
4-3/4	1-7/16
PACKOFF	A

(P) **GUIDE ASSEMBLY TYPE 546**

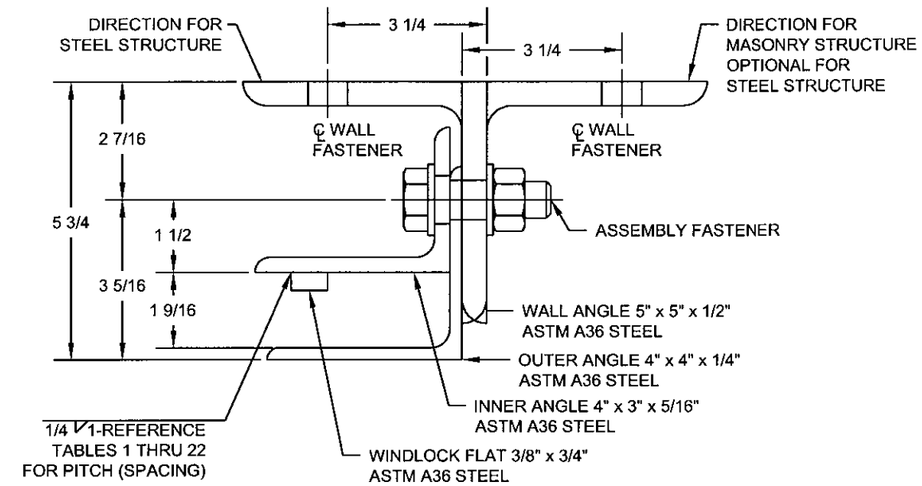

(Q) **GUIDE ASSEMBLY TYPE 548**

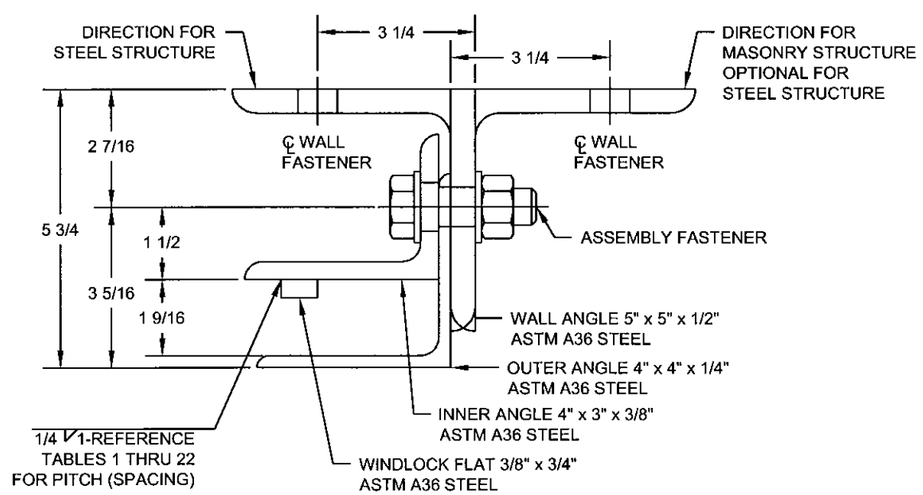

(R) **GUIDE ASSEMBLY TYPE 648**

CLOPAY CORPORATION
8585 DUKE BOULEVARD
MASON, OH 45040

TITLE
TDI WINDLOAD CONFIGURATIONS
INSULATED ROLLING DOOR

SIZE	DRAWN	DWG NO	REV
C	R. MAGGIO	16-43 TDI TD	*

SCALE 1:2 SHEET 5 OF 16

L'TR	REVISION	DATE	BY	E.C.O.
*	ORIGINAL ISSUE	10/06/2010	R.M.	----

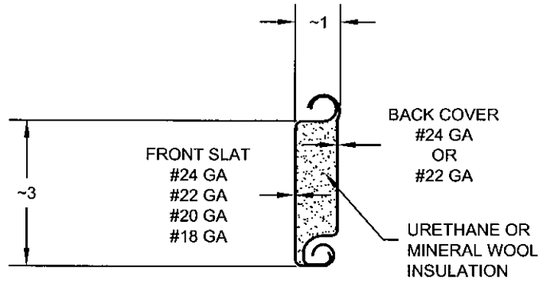

(1) **CP0001 / CP0651 SLAT**
TYPICAL SECTION
ASTM A653 HSLAS TYPE B GRADE 40 GALVANIZED
OR ASTM A653 HSLAS TYPE A GRADE 40 GALVANIZED
OR ASTM A653 STRUCTURAL STEEL GRADE 40 GALVANIZED
OR TYPE 304 STAINLESS STEEL (MIN. 40 ksi YIELD)
OR TYPE 430 STAINLESS STEEL (MIN. 40 ksi YIELD)
OR TYPE 201 STAINLESS STEEL (MIN. 40 ksi YIELD)

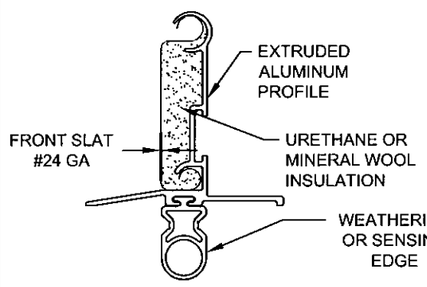

(2) **STANDARD BOTTOM BAR**
TYPICAL SECTION

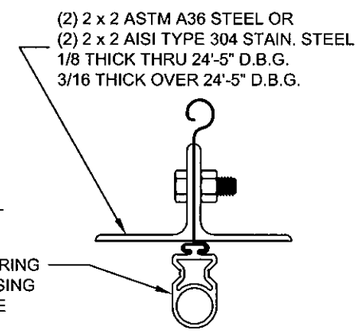

(3) **OPTIONAL BOTTOM BAR**
TYPICAL SECTION

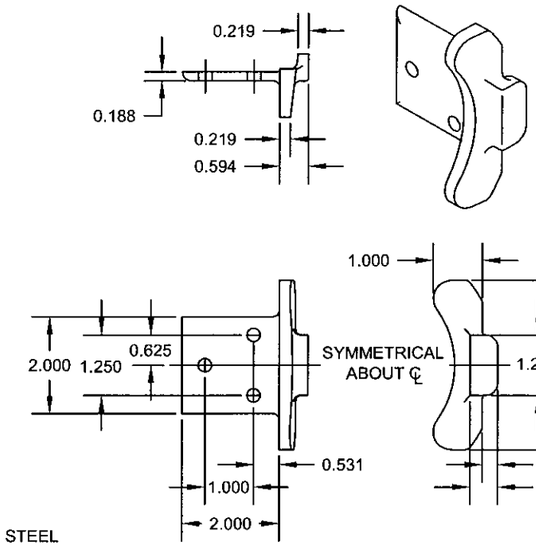

(5) **CP0630 HEAVY ALT. CAST IRON**
ENDLOCK / WINDLOCK

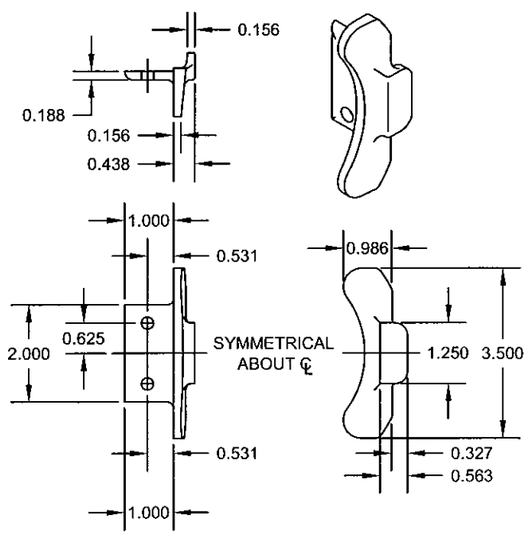

(4) **CP0629 LIGHT ALT. CAST IRON**
ENDLOCK / WINDLOCK

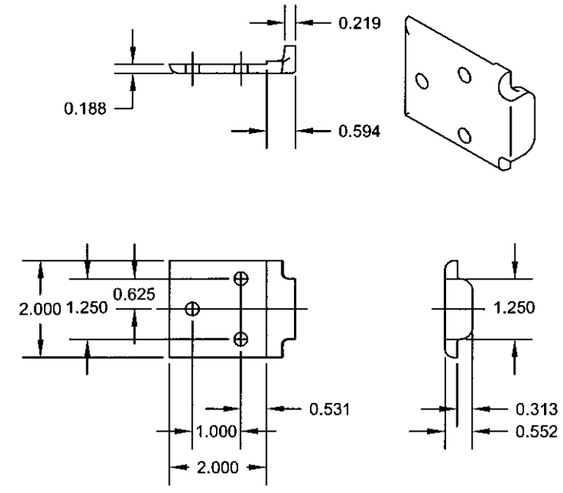

(6) **CP0647 CAST IRON**
WINDLOCK

GENERAL NOTES:

1. THESE PRODUCT EVALUATION DOCUMENTS REPRESENT ROLL-UP DOOR ASSEMBLIES DESIGNED AND TESTED IN ACCORDANCE WITH THE THE INTERNATIONAL BUILDING CODE AND THE FLORIDA BUILDING CODE.

2. DOORS MANUFACTURED WITH SLATS 20/24 GA. OR THICKER SATISFY THE TEXAS DEPARTMENT OF INSURANCE'S CRITERIA FOR PROTECTION FROM WINDBORNE DEBRIS IN THE INLAND 1 AND SEAWARD ZONE. THE ASSEMBLIES HAVE PASSED THE EQUIVALENT OF MISSILE LEVEL D AS SPECIFIED IN ASTM E1996-99

3. A 33% INCREASE IN ALLOWABLE STRESS HAS NOT BEEN USED IN THE DESIGN OF THIS PRODUCT.

4. DETERMINE THE POSITIVE AND NEGATIVE DESIGN LOADS TO USE WHEN REFERENCING THESE DOCUMENTS IN ACCORDANCE WITH THE GOVERNING CODE AND WIND VELOCITY.

5. THESE PRODUCT EVALUATION DOCUMENTS ARE SUITABLE TO BE APPLIED BY THE CONTRACTOR PROVIDED THE CONTRACTOR DOES NOT DEVIATE FROM THE CONDITIONS DETAILED HEREIN AND THE CONTRACTOR VERIFIES THE EXISTING STRUCTURE IS CAPABLE OF SUPPORTING THE SUPERIMPOSED LOADS Vx & Vy ON THE JAMBS OF THE DOOR.

6. WHEN THE SITE CONDITIONS DEVIATE FROM THESE PRODUCT EVALUATION DOCUMENTS, SITE SPECIFIC DOCUMENTS SHALL BE PREPARED BY A DULY LICENSED AND REGISTERED ENGINEER OR ARCHITECT.

7. ALL WELDING SHALL BE PERFORMED BY QUALIFIED WELDERS IN ACCORDANCE WITH A.W.S. SPECIFICATIONS, LATEST EDITION. ALL WELDING ELECTRODES SHALL CONFORM TO A.W.S. A5.1 GRADE E-70. MINIMUM WELDING PROCESSES SHALL BE ARC WELDING A.W.S. E7014 OR MIG WELDING A.W.S. ER70S-6.

8. DOOR MAY BE INSTALLED ON THE INSIDE OR OUTSIDE OF AN EXTERIOR WALL.

9. DOORS WILL BE MANUFACTURED BY CORNELL IRON WORKS FOR THE CLOPAY CORPORATION

Clopay
CLOPAY CORPORATION
8585 DUKE BOULEVARD
MASON, OH 45040

TITLE
TDI WINDLOAD CONFIGURATIONS
INSULATED ROLLING DOOR

SIZE	DRAWN	DWG NO	REV
C	R. MAGGIO	16-43 TDI TD	*

SCALE 1:2 SHEET 6 OF 16

LTR	REVISION	DATE	BY	E.C.O.
*	ORIGINAL ISSUE	10/06/2010	R.M.	*

TABLE 1

24/24 GA. GALVANIZED OR STAINLESS STEEL - 30 P.S.F. NON-IMPACT RATED

Distance Between Guides (D.B.G.) thru: (FT.- IN.)	Windlock Flat Location on Inner Angle (IN.)	Windlock	Guide Assembly Type	Windlock Flat Weld Pitch Spacing (IN.)	Fastener Diameter (IN.)	Assembly Fastener SAE Gr. 8 Maximum O.C. Spacing (IN.)	Wall Fasteners - Concrete Structure Min 3,000 PSI									Wall fasteners - Steel Structure Min 1/4" fillet weld entire slot perimeter or Gr. 8 bolt		Superimposed Loads POSITIVE (+)		Superimposed Loads NEGATIVE (-)	
							Hilti Kwik Bolt 3			Simpson Wedge-All			Powers Wedge-Bolt								
							Maximum O.C. Spacing (IN.)	Minimum Embedment (IN.)	Minimum Edge Distance (IN.)	Maximum O.C. Spacing (IN.)	Minimum Embedment (IN.)	Minimum Edge Distance (IN.)	Maximum O.C. Spacing (IN.)	Minimum Embedment (IN.)	Minimum Edge Distance (IN.)	Slot	Maximum O.C. Spacing (IN.)	Vx (LBS.)	Vy (LBS.)	Vx (LBS.)	Vy (LBS.)
2'-5"	N/R	N/R	344*	N/R	3/8	24	24	2 1/2	5 3/4	24	2 9/16	5 3/4	24	2 1/2	5 3/4	9/16" x 3/4"	24	0	37	0	35
3'-5"	N/R	N/R	344*	N/R	3/8	24	24	2 1/2	5 3/4	24	2 9/16	5 3/4	24	2 1/2	5 3/4	9/16" x 3/4"	24	0	52	0	50
4'-5"	N/R	N/R	344*	N/R	3/8	24	24	2 1/2	5 3/4	24	2 9/16	5 3/4	24	2 1/2	5 3/4	9/16" x 3/4"	24	0	67	0	65
5'-5"	N/R	N/R	344*	N/R	3/8	24	24	2 1/2	5 3/4	24	2 9/16	5 3/4	24	2 1/2	5 3/4	9/16" x 3/4"	24	0	82	0	80
6'-5"	N/R	N/R	344*	N/R	3/8	24	24	2 1/2	5 3/4	21	2 9/16	5 3/4	24	2 1/2	5 3/4	9/16" x 3/4"	24	0	97	0	95
7'-5"	N/R	N/R	344*	N/R	3/8	24	24	2 1/2	5 3/4	18	2 9/16	5 3/4	21	2 1/2	5 3/4	9/16" x 3/4"	24	0	112	0	110
8'-5"	N/R	N/R	344*	N/R	3/8	24	21	2 1/2	5 3/4	16	2 9/16	5 3/4	19	2 1/2	5 3/4	9/16" x 3/4"	24	0	127	0	125
9'-5"	N/R	N/R	344*	N/R	3/8	24	19	2 1/2	5 3/4	14	2 9/16	5 3/4	17	2 1/2	5 3/4	9/16" x 3/4"	24	0	142	0	140
10'-5"	N/R	N/R	344*	N/R	3/8	24	17	2 1/2	5 3/4	13	2 9/16	5 3/4	15	2 1/2	5 3/4	9/16" x 3/4"	24	0	157	0	155
11'-5"	N/R	N/R	344*	N/R	3/8	24	16	2 1/2	5 3/4	12	2 9/16	5 3/4	14	2 1/2	5 3/4	9/16" x 3/4"	24	0	172	0	170
12'-5"	1.5	CP0629	344	12	3/8	18	19	2 1/2	5 3/4	14	2 9/16	5 3/4	15	2 1/2	5 3/4	9/16" x 3/4"	18	74	187	120	189
13'-5"	1.5	CP0629	344	12	3/8	18	19	2 1/2	5 3/4	16	2 9/16	5 3/4	14	2 1/2	5 3/4	9/16" x 3/4"	18	299	202	335	205
14'-5"	1.5	CP0629	344	12	3/8	18	13	2 1/2	5 3/4	11	2 9/16	5 3/4	9	2 1/2	5 3/4	9/16" x 3/4"	18	480	217	507	220
15'-5"	1.5	CP0629	344	12	3/8	15	11	2 1/2	5 3/4	8	2 9/16	5 3/4	7	2 1/2	5 3/4	9/16" x 3/4"	18	631	232	652	235
16'-5"	1.5	CP0629	445	12	1/2	18	14	3 1/2	6 13/16	15	4 1/2	6 13/16	11	3 1/2	6 13/16	9/16" x 3/4"	18	745	247	786	252
17'-5"	1.5	CP0629	445	12	1/2	18	13	3 1/2	6 13/16	14	4 1/2	6 13/16	10	3 1/2	6 13/16	9/16" x 3/4"	18	852	262	886	266
18'-5"	1.5	CP0629	445	12	1/2	18	12	3 1/2	6 13/16	12	4 1/2	6 13/16	9	3 1/2	6 13/16	9/16" x 3/4"	18	944	277	972	281
19'-5"	1.5	CP0630	445	11	1/2	17	10	3 1/2	6 13/16	10	4 1/2	6 13/16	8	3 1/2	6 13/16	9/16" x 3/4"	18	1116	292	1140	296
20'-5"	1.625	CP0630	445	11	1/2	17	10	3 1/2	6 13/16	10	4 1/2	6 13/16	7	3 1/2	6 13/16	9/16" x 3/4"	17	1141	307	1160	311
21'-5"	1.75	CP0630	445	11	1/2	16	9	3 1/2	6 13/16	10	4 1/2	6 13/16	7	3 1/2	6 13/16	9/16" x 3/4"	17	1175	322	1190	325
22'-5"	1.875	CP0630	446	11	5/8	18	13	4	6 7/8	13	4 1/2	6 7/8	10	4	6 7/8	11/16" x 7/8"	18	1213	336	1225	340
23'-5"	2	CP0630	446	10	5/8	18	12	4	6 7/8	13	4 1/2	6 7/8	10	4	6 7/8	11/16" x 7/8"	18	1254	351	1264	354
24'-5"	2	CP0630	446	10	5/8	18	11	4	6 7/8	11	4 1/2	6 7/8	9	4	6 7/8	11/16" x 7/8"	16	1384	366	1393	370
25'-5"	2	CP0630 & CP0647	546	9	5/8	18	10	4	6 7/8	10	4 1/2	6 7/8	8	4	6 7/8	11/16" x 7/8"	15	1513	381	1521	385

TABLE 2

24/24 GA. GALVANIZED OR STAINLESS STEEL - 40 P.S.F. NON-IMPACT RATED

Distance Between Guides (D.B.G.) thru: (FT.- IN.)	Windlock Flat Location on Inner Angle (IN.)	Windlock	Guide Assembly Type	Windlock Flat Weld Pitch Spacing (IN.)	Fastener Diameter (IN.)	Assembly Fastener SAE Gr. 8 Maximum O.C. Spacing	Wall Fasteners - Concrete Structure Min 3,000 PSI									Wall fasteners - Steel Structure Min 1/4" fillet		Superimposed Loads POSITIVE (+)		Superimposed Loads NEGATIVE (-)	
							Hilti Kwik Bolt 3			Simpson Wedge-All			Powers Wedge-Bolt								
							Maximum O.C. Spacing (IN.)	Minimum Embedment (IN.)	Minimum Edge Distance (IN.)	Maximum O.C. Spacing (IN.)	Minimum Embedment (IN.)	Minimum Edge Distance (IN.)	Maximum O.C. Spacing (IN.)	Minimum Embedment (IN.)	Minimum Edge Distance (IN.)	Slot	Maximum O.C. Spacing (IN.)	Vx (LBS.)	Vy (LBS.)	Vx (LBS.)	Vy (LBS.)
2'-5"	N/R	N/R	344*	N/R	3/8	24	24	2 1/2	5 3/4	24	2 9/16	5 3/4	24	2 1/2	5 3/4	9/16" x 3/4"	24	0	50	0	47
3'-5"	N/R	N/R	344*	N/R	3/8	24	24	2 1/2	5 3/4	24	2 9/16	5 3/4	24	2 1/2	5 3/4	9/16" x 3/4"	24	0	70	0	67
4'-5"	N/R	N/R	344*	N/R	3/8	24	24	2 1/2	5 3/4	23	2 9/16	5 3/4	24	2 1/2	5 3/4	9/16" x 3/4"	24	0	90	0	87
5'-5"	N/R	N/R	344*	N/R	3/8	24	24	2 1/2	5 3/4	19	2 9/16	5 3/4	22	2 1/2	5 3/4	9/16" x 3/4"	24	0	110	0	107
6'-5"	N/R	N/R	344*	N/R	3/8	24	21	2 1/2	5 3/4	16	2 9/16	5 3/4	19	2 1/2	5 3/4	9/16" x 3/4"	24	0	130	0	127
7'-5"	N/R	N/R	344*	N/R	3/8	24	18	2 1/2	5 3/4	14	2 9/16	5 3/4	16	2 1/2	5 3/4	9/16" x 3/4"	24	0	150	0	147
8'-5"	N/R	N/R	344*	N/R	3/8	24	16	2 1/2	5 3/4	12	2 9/16	5 3/4	14	2 1/2	5 3/4	9/16" x 3/4"	24	0	170	0	167
9'-5"	N/R	N/R	344*	N/R	3/8	24	14	2 1/2	5 3/4	11	2 9/16	5 3/4	13	2 1/2	5 3/4	9/16" x 3/4"	24	0	190	0	187
10'-5"	N/R	N/R	344*	N/R	3/8	24	13	2 1/2	5 3/4	10	2 9/16	5 3/4	11	2 1/2	5 3/4	9/16" x 3/4"	24	0	210	0	207
11'-5"	1.5	CP0629	344	12	3/8	18	15	2 1/2	5 3/4	12	2 9/16	5 3/4	11	2 1/2	5 3/4	9/16" x 3/4"	18	377	230	444	233
12'-5"	1.5	CP0629	344	12	3/8	14	9	2 1/2	5 3/4	7	2 9/16	5 3/4	6	2 1/2	5 3/4	9/16" x 3/4"	18	713	250	766	254
13'-5"	1.5	CP0630	445	11	1/2	18	11	3 1/2	6 13/16	12	4 1/2	6 13/16	8	3 1/2	6 13/16	9/16" x 3/4"	18	977	270	1060	277
14'-5"	1.5	CP0630	445	10	1/2	16	9	3 1/2	6 13/16	10	4 1/2	6 13/16	7	3 1/2	6 13/16	9/16" x 3/4"	16	1217	290	1286	297
15'-5"	1.5	CP0630	446	10	5/8	18	11	4	6 7/8	11	4 1/2	6 7/8	9	4	6 7/8	11/16" x 7/8"	16	1426	311	1484	318
16'-5"	1.5	CP0630 & CP0647	546	9	5/8	18	10	4	6 7/8	10	4 1/2	6 7/8	8	4	6 7/8	11/16" x 7/8"	14	1606	331	1656	338
17'-5"	1.5	CP0630 & CP0647	546	9	5/8	18	9	4	6 7/8	9	4 1/2	6 7/8	7	4	6 7/8	11/16" x 7/8"	13	1771	351	1814	358
18'-5"	1.5	CP0630 & CP0647	548	8	3/4	18	12	4 3/4	7 1/2	9	5	7 1/2	10	5	7 1/2	13/16" x 1"	18	1927	372	1968	379
19'-5"	1.5	CP0630 & CP0647	548	8	3/4	18	12	4 3/4	7 1/2	11	5	7 1/2	9	5	7 1/2	13/16" x 1"	18	2068	392	2105	399
20'-5"	1.5	CP0630 & CP0647	548	8	3/4	18	11	4 3/4	7 1/2	10	5	7 1/2	9	5	7 1/2	13/16" x 1"	17	2209	412	2241	420
21'-5"	1.5	CP0630 & CP0647	548	8	3/4	18	9	4 3/4	7 1/2	10	5	7 1/2	N/A	N/A	N/A	13/16" x 1"	16	2349	433	2379	440
22'-5"	1.5	CP0630 & CP0647	548	7	3/4	18	8	4 3/4	7 1/2	9	5	7 1/2	N/A	N/A	N/A	13/16" x 1"	15	2505	453	2532	460
23'-5"	1.5	CP0630 & CP0647	648	7	3/4	18	7	4 3/4	7 1/2	9	5	7 1/2	N/A	N/A	N/A	13/16" x 1"	14	2734	474	2760	481
24'-5"	1.5	CP0630 & CP0647	648	7	3/4	18	7	4 3/4	7 1/2	8	5	7 1/2	N/A	N/A	N/A	13/16" x 1"	13	2714	493	2737	500
25'-5"	1.5	CP0630 & CP0647	648	7	3/4	17	6	4 3/4	7 1/2	8	5	7 1/2	N/A	N/A	N/A	13/16" x 1"	13	2924	514	2946	521

NOTES:
1. N/R - not required
2. * - non - windlock guide assembly
3. N/A - not available

CLOPAY CORPORATION
8585 DUKE BOULEVARD
MASON, OH 45040

TITLE
TDI WINDLOAD CONFIGURATIONS,
INSULATED ROLLING DOOR

SIZE	DRAWN	DWG NO	REV
D	R. MAGGIO	16-43 TDI TD	*

SCALE 1:1 SHEET 7 OF 16

LTR	REVISION	DATE	BY	E.C.O.
*	ORIGINAL ISSUE	10/06/2010	R.M.	*

TABLE 3 — 24/24 GA. GALVANIZED OR STAINLESS STEEL - 50 P.S.F. NON-IMPACT RATED

Distance Between Guides (D.B.G.) thru: (FT.- IN.)	Windlock Flat Location on Inner Angle (IN.)	Windlock	Guide Assembly Type	Windlock Flat Weld Pitch Spacing (IN.)	Fastener Diameter (IN.)	Assembly Fastener SAE Gr. 8 Maximum O.C. Spacing (IN.)	Wall Fasteners - Concrete Structure Min 3,000 PSI									Wall fasteners - Steel Structure Min 1/4" fillet weld entire slot perimeter or Gr. 8 bolt		Superimposed Loads POSITIVE (+)		Superimposed Loads NEGATIVE (-)	
							Hilti Kwik Bolt 3			Simpson Wedge-All			Powers Wedge-Bolt								
							Maximum O.C. Spacing (IN.)	Minimum Embedment (IN.)	Minimum Edge Distance (IN.)	Maximum O.C. Spacing (IN.)	Minimum Embedment (IN.)	Minimum Edge Distance (IN.)	Maximum O.C. Spacing (IN.)	Minimum Embedment (IN.)	Minimum Edge Distance (IN.)	Slot	Maximum O.C. Spacing (IN.)	Vx (LBS.)	Vy (LBS.)	Vx (LBS.)	Vy (LBS.)
2'-5"	N/R	N/R	344*	N/R	3/8	24	24	2 1/2	5 3/4	24	2 9/16	5 3/4	24	2 1/2	5 3/4	9/16" x 3/4"	24	0	62	0	58
3'-5"	N/R	N/R	344*	N/R	3/8	24	24	2 1/2	5 3/4	24	2 9/16	5 3/4	24	2 1/2	5 3/4	9/16" x 3/4"	24	0	87	0	83
4'-5"	N/R	N/R	344*	N/R	3/8	24	24	2 1/2	5 3/4	18	2 9/16	5 3/4	22	2 1/2	5 3/4	9/16" x 3/4"	24	0	112	0	108
5'-5"	N/R	N/R	344*	N/R	3/8	24	20	2 1/2	5 3/4	15	2 9/16	5 3/4	18	2 1/2	5 3/4	9/16" x 3/4"	24	0	137	0	133
6'-5"	N/R	N/R	344*	N/R	3/8	24	17	2 1/2	5 3/4	13	2 9/16	5 3/4	15	2 1/2	5 3/4	9/16" x 3/4"	24	0	162	0	158
7'-5"	N/R	N/R	344*	N/R	3/8	24	15	2 1/2	5 3/4	11	2 9/16	5 3/4	13	2 1/2	5 3/4	9/16" x 3/4"	24	0	187	0	183
8'-5"	N/R	N/R	344*	N/R	3/8	24	13	2 1/2	5 3/4	9	2 9/16	5 3/4	11	2 1/2	5 3/4	9/16" x 3/4"	24	0	212	0	208
9'-5"	N/R	N/R	344*	N/R	3/8	24	12	2 1/2	5 3/4	8	2 9/16	5 3/4	10	2 1/2	5 3/4	9/16" x 3/4"	24	0	237	0	233
10'-5"	1.5	CP0629	445	12	1/2	18	14	3 1/2	6 13/16	7	4 1/2	6 13/16	10	3 1/2	6 13/16	9/16" x 3/4"	18	669	262	851	271
11'-5"	1.5	CP0630	446	10	5/8	18	12	4	6 7/8	12	4 1/2	6 7/8	9	4	6 7/8	11/16" x 7/8"	17	1256	288	1398	298
12'-5"	1.5	CP0630 & CP0647	548	8	3/4	18	12	4 3/4	7 1/2	12	5	7 1/2	10	5	7 1/2	13/16" x 1"	18	1925	316	2055	327

TABLE 4 — 24/24 GA. GALVANIZED OR STAINLESS STEEL - 60 P.S.F. NON-IMPACT RATED

Distance Between Guides (D.B.G.) thru: (FT.- IN.)	Windlock Flat Location on Inner Angle (IN.)	Windlock	Guide Assembly Type	Windlock Flat Weld Pitch Spacing (IN.)	Fastener Diameter (IN.)	Assembly Fastener SAE Gr. 8 Maximum O.C. Spacing	Wall Fasteners - Concrete Structure Min 3,000 PSI									Wall fasteners - Steel Structure Min 1/4" fillet		Superimposed Loads POSITIVE (+)		Superimposed Loads NEGATIVE (-)	
							Hilti Kwik Bolt 3			Simpson Wedge-All			Powers Wedge-Bolt								
							Maximum O.C. Spacing (IN.)	Minimum Embedment (IN.)	Minimum Edge Distance (IN.)	Maximum O.C. Spacing (IN.)	Minimum Embedment (IN.)	Minimum Edge Distance (IN.)	Maximum O.C. Spacing (IN.)	Minimum Embedment (IN.)	Minimum Edge Distance (IN.)	Slot	Maximum O.C. Spacing (IN.)	Vx (LBS.)	Vy (LBS.)	Vx (LBS.)	Vy (LBS.)
2'-5"	N/R	N/R	344*	N/R	3/8	24	24	2 1/2	5 3/4	24	2 9/16	5 3/4	24	2 1/2	5 3/4	9/16" x 3/4"	24	0	74	0	70
3'-5"	N/R	N/R	344*	N/R	3/8	24	24	2 1/2	5 3/4	20	2 9/16	5 3/4	23	2 1/2	5 3/4	9/16" x 3/4"	24	0	104	0	100
4'-5"	N/R	N/R	344*	N/R	3/8	24	20	2 1/2	5 3/4	15	2 9/16	5 3/4	18	2 1/2	5 3/4	9/16" x 3/4"	24	0	134	0	130
5'-5"	N/R	N/R	344*	N/R	3/8	24	17	2 1/2	5 3/4	12	2 9/16	5 3/4	15	2 1/2	5 3/4	9/16" x 3/4"	24	0	164	0	160
6'-5"	N/R	N/R	344*	N/R	3/8	24	14	2 1/2	5 3/4	10	2 9/16	5 3/4	12	2 1/2	5 3/4	9/16" x 3/4"	24	0	194	0	190
7'-5"	N/R	N/R	344*	N/R	3/8	24	12	2 1/2	5 3/4	9	2 9/16	5 3/4	11	2 1/2	5 3/4	9/16" x 3/4"	24	0	224	0	220
8'-5"	N/R	N/R	344*	N/R	3/8	24	11	2 1/2	5 3/4	8	2 9/16	5 3/4	9	2 1/2	5 3/4	9/16" x 3/4"	24	0	254	0	250
9'-5"	1.5	CP0630	445	11	1/2	17	10	3 1/2	6 13/16	10	4 1/2	6 13/16	7	3 1/2	6 13/16	9/16" x 3/4"	18	985	285	1232	297

NOTES:
1. N/R - not required
2. * - non - windlock guide assembly
3. N/A - not available

Clopay
CLOPAY CORPORATION
8585 DUKE BOULEVARD
MASON, OH 45040

TITLE
TDI WINDLOAD CONFIGURATIONS, INSULATED ROLLING DOOR

SIZE	DRAWN	DWG NO	REV
D	R. MAGGIO	16-43 TDI TD	*

SCALE 1:1 SHEET 8 OF 16

L'TR	REVISION	DATE	BY	E.C.O.
*	ORIGINAL ISSUE	10/06/2010	R.M.	*

TABLE 5

22/24 GA. GALVANIZED OR STAINLESS STEEL - 30 P.S.F. NON-IMPACT RATED

Distance Between Guides (D.B.G.) thru: (FT.- IN.)	Windlock Flat Location on Inner Angle (IN.)	Windlock	Guide Assembly Type	Windlock Flat Weld Pitch Spacing (IN.)	Fastener Diameter (IN.)	Assembly Fastener SAE Gr. 8 Maximum O.C. Spacing (IN.)	Wall Fasteners - Concrete Structure Min 3,000 PSI									Wall fasteners - Steel Structure Min 1/4" fillet weld entire slot perimeter or Gr. 8 bolt		Superimposed Loads POSITIVE (+)		Superimposed Loads NEGATIVE (-)	
							Hilti Kwik Bolt 3			Simpson Wedge-All			Powers Wedge-Bolt								
							Maximum O.C. Spacing (IN.)	Minimum Embedment (IN.)	Minimum Edge Distance (IN.)	Maximum O.C. Spacing (IN.)	Minimum Embedment (IN.)	Minimum Edge Distance (IN.)	Maximum O.C. Spacing (IN.)	Minimum Embedment (IN.)	Minimum Edge Distance (IN.)	Slot	Maximum O.C. Spacing (IN.)	Vx (LBS.)	Vy (LBS.)	Vx (LBS.)	Vy (LBS.)
2'-5"	N/R	N/R	344*	N/R	3/8	24	24	2 1/2	5 3/4	24	2 9/16	5 3/4	24	2 1/2	5 3/4	9/16" x 3/4"	24	0	37	0	35
3'-5"	N/R	N/R	344*	N/R	3/8	24	24	2 1/2	5 3/4	24	2 9/16	5 3/4	24	2 1/2	5 3/4	9/16" x 3/4"	24	0	52	0	50
4'-5"	N/R	N/R	344*	N/R	3/8	24	24	2 1/2	5 3/4	24	2 9/16	5 3/4	24	2 1/2	5 3/4	9/16" x 3/4"	24	0	67	0	65
5'-5"	N/R	N/R	344*	N/R	3/8	24	24	2 1/2	5 3/4	24	2 9/16	5 3/4	24	2 1/2	5 3/4	9/16" x 3/4"	24	0	82	0	80
6'-5"	N/R	N/R	344*	N/R	3/8	24	24	2 1/2	5 3/4	21	2 9/16	5 3/4	24	2 1/2	5 3/4	9/16" x 3/4"	24	0	97	0	95
7'-5"	N/R	N/R	344*	N/R	3/8	24	24	2 1/2	5 3/4	18	2 9/16	5 3/4	21	2 1/2	5 3/4	9/16" x 3/4"	24	0	112	0	110
8'-5"	N/R	N/R	344*	N/R	3/8	24	21	2 1/2	5 3/4	16	2 9/16	5 3/4	19	2 1/2	5 3/4	9/16" x 3/4"	24	0	127	0	125
9'-5"	N/R	N/R	344*	N/R	3/8	24	19	2 1/2	5 3/4	14	2 9/16	5 3/4	17	2 1/2	5 3/4	9/16" x 3/4"	24	0	142	0	140
10'-5"	N/R	N/R	344*	N/R	3/8	24	17	2 1/2	5 3/4	13	2 9/16	5 3/4	15	2 1/2	5 3/4	9/16" x 3/4"	24	0	157	0	155
11'-5"	N/R	N/R	344*	N/R	3/8	24	16	2 1/2	5 3/4	12	2 9/16	5 3/4	14	2 1/2	5 3/4	9/16" x 3/4"	24	0	172	0	170
12'-5"	N/R	N/R	344*	N/R	3/8	24	15	2 1/2	5 3/4	11	2 9/16	5 3/4	13	2 1/2	5 3/4	9/16" x 3/4"	24	0	187	0	185
13'-5"	1.5	CP0629	344	12	3/8	18	18	2 1/2	5 3/4	15	2 9/16	5 3/4	16	2 1/2	5 3/4	9/16" x 3/4"	18	117	202	155	204
14'-5"	1.5	CP0629	344	12	3/8	18	18	2 1/2	5 3/4	17	2 9/16	5 3/4	15	2 1/2	5 3/4	9/16" x 3/4"	18	268	217	296	219
15'-5"	1.5	CP0629	344	12	3/8	18	15	2 1/2	5 3/4	12	2 9/16	5 3/4	10	2 1/2	5 3/4	9/16" x 3/4"	18	426	232	446	234
16'-5"	1.5	CP0629	344	12	3/8	16	12	2 1/2	5 3/4	9	2 9/16	5 3/4	8	2 1/2	5 3/4	9/16" x 3/4"	18	555	247	571	249
17'-5"	1.5	CP0629	344	12	3/8	14	10	2 1/2	5 3/4	8	2 9/16	5 3/4	7	2 1/2	5 3/4	9/16" x 3/4"	18	665	262	676	264
18'-5"	1.5	CP0629	445	12	1/2	18	13	3 1/2	6 13/16	14	4 1/2	6 13/16	10	3 1/2	6 13/16	9/16" x 3/4"	18	800	277	829	281
19'-5"	1.625	CP0629	445	12	1/2	18	13	3 1/2	6 13/16	13	4 1/2	6 13/16	10	3 1/2	6 13/16	9/16" x 3/4"	18	859	291	881	295
20'-5"	1.75	CP0629	445	12	1/2	18	12	3 1/2	6 13/16	12	4 1/2	6 13/16	9	3 1/2	6 13/16	9/16" x 3/4"	18	918	306	936	310
21'-5"	1.875	CP0629	445	12	1/2	18	11	3 1/2	6 13/16	12	4 1/2	6 13/16	8	3 1/2	6 13/16	9/16" x 3/4"	18	977	321	991	324
22'-5"	2	CP0629	445	11	1/2	17	10	3 1/2	6 13/16	11	4 1/2	6 13/16	8	3 1/2	6 13/16	9/16" x 3/4"	18	1036	336	1046	339
23'-5"	2	CP0630	446	11	5/8	18	13	4	6 7/8	13	4 1/2	6 7/8	10	4	6 7/8	11/16" x 7/8"	18	1211	351	1221	354
24'-5"	2	CP0630	446	10	5/8	18	12	4	6 7/8	12	4 1/2	6 7/8	9	4	6 7/8	11/16" x 7/8"	17	1344	366	1354	369
25'-5"	2	CP0630	546	10	5/8	18	11	4	6 7/8	11	4 1/2	6 7/8	9	4	6 7/8	11/16" x 7/8"	15	1476	381	1485	385

TABLE 6

22/24 GA. GALVANIZED OR STAINLESS STEEL - 40 P.S.F. NON-IMPACT RATED

Distance Between Guides (D.B.G.) thru: (FT.- IN.)	Windlock Flat Location on Inner Angle (IN.)	Windlock	Guide Assembly Type	Windlock Flat Weld Pitch Spacing (IN.)	Fastener Diameter (IN.)	Assembly Fastener SAE Gr. 8 Maximum O.C. Spacing (IN.)	Wall Fasteners - Concrete Structure Min 3,000 PSI									Wall fasteners - Steel Structure Min 1/4" fillet weld entire slot perimeter or Gr. 8 bolt		Superimposed Loads POSITIVE (+)		Superimposed Loads NEGATIVE (-)	
							Hilti Kwik Bolt 3			Simpson Wedge-All			Powers Wedge-Bolt								
							Maximum O.C. Spacing (IN.)	Minimum Embedment (IN.)	Minimum Edge Distance (IN.)	Maximum O.C. Spacing (IN.)	Minimum Embedment (IN.)	Minimum Edge Distance (IN.)	Maximum O.C. Spacing (IN.)	Minimum Embedment (IN.)	Minimum Edge Distance (IN.)	Slot	Maximum O.C. Spacing (IN.)	Vx (LBS.)	Vy (LBS.)	Vx (LBS.)	Vy (LBS.)
2'-5"	N/R	N/R	344*	N/R	3/8	24	24	2 1/2	5 3/4	24	2 9/16	5 3/4	24	2 1/2	5 3/4	9/16" x 3/4"	24	0	50	0	47
3'-5"	N/R	N/R	344*	N/R	3/8	24	24	2 1/2	5 3/4	24	2 9/16	5 3/4	24	2 1/2	5 3/4	9/16" x 3/4"	24	0	70	0	67
4'-5"	N/R	N/R	344*	N/R	3/8	24	24	2 1/2	5 3/4	23	2 9/16	5 3/4	24	2 1/2	5 3/4	9/16" x 3/4"	24	0	90	0	87
5'-5"	N/R	N/R	344*	N/R	3/8	24	24	2 1/2	5 3/4	19	2 9/16	5 3/4	22	2 1/2	5 3/4	9/16" x 3/4"	24	0	110	0	107
6'-5"	N/R	N/R	344*	N/R	3/8	24	21	2 1/2	5 3/4	16	2 9/16	5 3/4	19	2 1/2	5 3/4	9/16" x 3/4"	24	0	130	0	127
7'-5"	N/R	N/R	344*	N/R	3/8	24	18	2 1/2	5 3/4	14	2 9/16	5 3/4	16	2 1/2	5 3/4	9/16" x 3/4"	24	0	150	0	147
8'-5"	N/R	N/R	344*	N/R	3/8	24	16	2 1/2	5 3/4	12	2 9/16	5 3/4	14	2 1/2	5 3/4	9/16" x 3/4"	24	0	170	0	167
9'-5"	N/R	N/R	344*	N/R	3/8	24	14	2 1/2	5 3/4	11	2 9/16	5 3/4	13	2 1/2	5 3/4	9/16" x 3/4"	24	0	190	0	187
10'-5"	N/R	N/R	344*	N/R	3/8	24	13	2 1/2	5 3/4	10	2 9/16	5 3/4	11	2 1/2	5 3/4	9/16" x 3/4"	24	0	210	0	207
11'-5"	1.5	CP0629	344	12	3/8	18	16	2 1/2	5 3/4	12	2 9/16	5 3/4	13	2 1/2	5 3/4	9/16" x 3/4"	18	105	230	177	233
12'-5"	1.5	CP0629	344	12	3/8	18	16	2 1/2	5 3/4	12	2 9/16	5 3/4	11	2 1/2	5 3/4	9/16" x 3/4"	18	371	250	425	253
13'-5"	1.5	CP0629	344	12	3/8	14	10	2 1/2	5 3/4	8	2 9/16	5 3/4	7	2 1/2	5 3/4	9/16" x 3/4"	18	638	270	680	273
14'-5"	1.5	CP0629	445	12	1/2	18	12	3 1/2	6 13/16	13	4 1/2	6 13/16	9	3 1/2	6 13/16	9/16" x 3/4"	18	859	289	932	296
15'-5"	1.5	CP0629	445	11	1/2	18	11	3 1/2	6 13/16	11	4 1/2	6 13/16	8	3 1/2	6 13/16	9/16" x 3/4"	18	1026	310	1085	316
16'-5"	1.5	CP0630	445	11	1/2	16	9	3 1/2	6 13/16	10	4 1/2	6 13/16	7	3 1/2	6 13/16	9/16" x 3/4"	17	1184	330	1231	336
17'-5"	1.5	CP0630	446	10	5/8	18	12	4	6 7/8	12	4 1/2	6 7/8	10	4	6 7/8	11/16" x 7/8"	17	1316	350	1355	356
18'-5"	1.5	CP0630	446	10	5/8	18	11	4	6 7/8	11	4 1/2	6 7/8	9	4	6 7/8	11/16" x 7/8"	16	1428	370	1461	376
19'-5"	1.5	CP0630	546	9	5/8	18	10	4	6 7/8	10	4 1/2	6 7/8	8	4	6 7/8	11/16" x 7/8"	14	1590	390	1619	396
20'-5"	1.625	CP0630	546	9	5/8	18	10	4	6 7/8	10	4 1/2	6 7/8	8	4	6 7/8	11/16" x 7/8"	14	1613	409	1636	415
21'-5"	1.625	CP0630 & CP0647	548	9	3/4	18	13	4 3/4	7 1/2	9	5	7 1/2	10	5	7 1/2	13/16" x 1"	18	1822	430	1845	436
22'-5"	1.75	CP0630 & CP0647	548	9	3/4	18	13	4 3/4	7 1/2	12	5	7 1/2	10	5	7 1/2	13/16" x 1"	18	1844	450	1863	455
23'-5"	1.875	CP0630 & CP0647	548	9	3/4	18	12	4 3/4	7 1/2	11	5	7 1/2	10	5	7 1/2	13/16" x 1"	18	1876	469	1891	475
24'-5"	2	CP0630 & CP0647	548	8	3/4	18	12	4 3/4	7 1/2	11	5	7 1/2	10	5	7 1/2	13/16" x 1"	18	1915	489	1927	494
25'-5"	2.125	CP0630 & CP0647	548	8	3/4	18	12	4 3/4	7 1/2	11	5	7 1/2	9	5	7 1/2	13/16" x 1"	18	1958	509	1968	513

NOTES:
1. N/R - not required
2. * - non - windlock guide assembly
3. N/A - not available

Clopay
CLOPAY CORPORATION
8585 DUKE BOULEVARD
MASON, OH 45040

TITLE
TDI WINDLOAD CONFIGURATIONS, INSULATED ROLLING DOOR

SIZE	DRAWN	DWG NO	REV
D	R. MAGGIO	16-43 TDI TD	*

SCALE 1:1 SHEET 9 OF 16

L'TR	REVISION	DATE	BY	E.C.O.
*	ORIGINAL ISSUE	10/06/2010	R.M.	*

TABLE 7

22/24 GA. GALVANIZED OR STAINLESS STEEL - 50 P.S.F. NON-IMPACT RATED

Distance Between Guides (D.B.G.) thru: (FT.- IN.)	Windlock Flat Location on Inner Angle (IN.)	Windlock	Guide Assembly Type	Windlock Flat Weld Pitch Spacing (IN.)	Fastener Diameter (IN.)	Assembly Fastener SAE Gr. 8 Maximum O.C. Spacing (IN.)	Wall Fasteners - Concrete Structure Min 3,000 PSI									Wall fasteners - Steel Structure Min 1/4" fillet weld entire slot perimeter or Gr. 8 bolt		Superimposed Loads POSITIVE (+)		Superimposed Loads NEGATIVE (-)	
							Hilti Kwik Bolt 3			Simpson Wedge-All			Powers Wedge-Bolt								
							Maximum O.C. Spacing (IN.)	Minimum Embedment (IN.)	Minimum Edge Distance (IN.)	Maximum O.C. Spacing (IN.)	Minimum Embedment (IN.)	Minimum Edge Distance (IN.)	Maximum O.C. Spacing (IN.)	Minimum Embedment (IN.)	Minimum Edge Distance (IN.)	Slot	Maximum O.C. Spacing (IN.)	Vx (LBS.)	Vy (LBS.)	Vx (LBS.)	Vy (LBS.)
2'-5"	N/R	N/R	344*	N/R	3/8	24	24	2 1/2	5 3/4	24	2 9/16	5 3/4	24	2 1/2	5 3/4	9/16" x 3/4"	24	0	62	0	58
3'-5"	N/R	N/R	344*	N/R	3/8	24	24	2 1/2	5 3/4	24	2 9/16	5 3/4	24	2 1/2	5 3/4	9/16" x 3/4"	24	0	87	0	83
4'-5"	N/R	N/R	344*	N/R	3/8	24	24	2 1/2	5 3/4	18	2 9/16	5 3/4	22	2 1/2	5 3/4	9/16" x 3/4"	24	0	112	0	108
5'-5"	N/R	N/R	344*	N/R	3/8	24	20	2 1/2	5 3/4	15	2 9/16	5 3/4	18	2 1/2	5 3/4	9/16" x 3/4"	24	0	137	0	133
6'-5"	N/R	N/R	344*	N/R	3/8	24	17	2 1/2	5 3/4	13	2 9/16	5 3/4	15	2 1/2	5 3/4	9/16" x 3/4"	24	0	162	0	158
7'-5"	N/R	N/R	344*	N/R	3/8	24	15	2 1/2	5 3/4	11	2 9/16	5 3/4	13	2 1/2	5 3/4	9/16" x 3/4"	24	0	187	0	183
8'-5"	N/R	N/R	344*	N/R	3/8	24	13	2 1/2	5 3/4	9	2 9/16	5 3/4	11	2 1/2	5 3/4	9/16" x 3/4"	24	0	212	0	208
9'-5"	N/R	N/R	344*	N/R	3/8	24	12	2 1/2	5 3/4	8	2 9/16	5 3/4	10	2 1/2	5 3/4	9/16" x 3/4"	24	0	237	0	233
10'-5"	1.5	CP0629	344	12	3/8	18	19	2 1/2	5 3/4	13	2 9/16	5 3/4	13	2 1/2	5 3/4	9/16" x 3/4"	18	202	262	302	266
11'-5"	1.5	CP0629	344	12	3/8	13	10	2 1/2	5 3/4	7	2 9/16	5 3/4	7	2 1/2	5 3/4	9/16" x 3/4"	18	660	287	737	292
12'-5"	1.5	CP0629	445	11	1/2	17	10	3 1/2	6 13/16	11	4 1/2	6 13/16	8	3 1/2	6 13/16	9/16" x 3/4"	18	1042	312	1163	321
13'-5"	1.5	CP0630	446	10	5/8	18	11	4	6 7/8	11	4 1/2	6 7/8	9	4	6 7/8	11/16" x 7/8"	16	1381	338	1478	347
14'-5"	1.5	CP0630	546	9	5/8	18	9	4	6 7/8	10	4 1/2	6 7/8	8	4	6 7/8	11/16" x 7/8"	13	1677	364	1758	373
15'-5"	1.5	CP0630 & CP0647	548	8	3/4	18	12	4 3/4	7 1/2	11	5	7 1/2	10	5	7 1/2	13/16" x 1"	18	1945	390	2019	399
16'-5"	1.5	CP0630 & CP0647	548	8	3/4	18	11	4 3/4	7 1/2	10	5	7 1/2	9	5	7 1/2	13/16" x 1"	17	2190	415	2255	425
17'-5"	1.5	CP0630 & CP0647	548	7	3/4	18	8	4 3/4	7 1/2	9	5	7 1/2	N/A	N/A	N/A	13/16" x 1"	15	2424	441	2480	450
18'-5"	1.5	CP0630 & CP0647	648	7	3/4	18	7	4 3/4	7 1/2	8	5	7 1/2	N/A	N/A	N/A	13/16" x 1"	14	2665	466	2716	476
19'-5"	1.5	CP0630 & CP0647	648	7	3/4	17	6	4 3/4	7 1/2	8	5	7 1/2	N/A	N/A	N/A	13/16" x 1"	13	2953	493	3000	502
20'-5"	1.5	CP0630 & CP0647	648	7	3/4	16	5	4 3/4	7 1/2	7	5	7 1/2	N/A	N/A	N/A	13/16" x 1"	11	3112	518	3154	527

TABLE 8

22/24 GA. GALVANIZED OR STAINLESS STEEL - 60 P.S.F. NON-IMPACT RATED

Distance Between Guides (D.B.G.) thru: (FT.- IN.)	Windlock Flat Location on Inner Angle (IN.)	Windlock	Guide Assembly Type	Windlock Flat Weld Pitch Spacing (IN.)	Fastener Diameter (IN.)	Assembly Fastener SAE Gr. 8 Maximum O.C. Spacing	Wall Fasteners - Concrete Structure Min 3,000 PSI									Wall fasteners - Steel Structure Min 1/4" fillet		Superimposed Loads POSITIVE (+)		Superimposed Loads NEGATIVE (-)	
							Hilti Kwik Bolt 3			Simpson Wedge-All			Powers Wedge-Bolt								
							Maximum O.C. Spacing (IN.)	Minimum Embedment (IN.)	Minimum Edge Distance (IN.)	Maximum O.C. Spacing (IN.)	Minimum Embedment (IN.)	Minimum Edge Distance (IN.)	Maximum O.C. Spacing (IN.)	Minimum Embedment (IN.)	Minimum Edge Distance (IN.)	Slot	Maximum O.C. Spacing (IN.)	Vx (LBS.)	Vy (LBS.)	Vx (LBS.)	Vy (LBS.)
2'-5"	N/R	N/R	344*	N/R	3/8	24	24	2 1/2	5 3/4	24	2 9/16	5 3/4	24	2 1/2	5 3/4	9/16" x 3/4"	24	0	74	0	70
3'-5"	N/R	N/R	344*	N/R	3/8	24	24	2 1/2	5 3/4	20	2 9/16	5 3/4	23	2 1/2	5 3/4	9/16" x 3/4"	24	0	104	0	100
4'-5"	N/R	N/R	344*	N/R	3/8	24	20	2 1/2	5 3/4	15	2 9/16	5 3/4	18	2 1/2	5 3/4	9/16" x 3/4"	24	0	134	0	130
5'-5"	N/R	N/R	344*	N/R	3/8	24	17	2 1/2	5 3/4	12	2 9/16	5 3/4	15	2 1/2	5 3/4	9/16" x 3/4"	24	0	164	0	160
6'-5"	N/R	N/R	344*	N/R	3/8	24	14	2 1/2	5 3/4	10	2 9/16	5 3/4	12	2 1/2	5 3/4	9/16" x 3/4"	24	0	194	0	190
7'-5"	N/R	N/R	344*	N/R	3/8	24	12	2 1/2	5 3/4	9	2 9/16	5 3/4	11	2 1/2	5 3/4	9/16" x 3/4"	24	0	224	0	220
8'-5"	N/R	N/R	344*	N/R	3/8	24	11	2 1/2	5 3/4	8	2 9/16	5 3/4	9	2 1/2	5 3/4	9/16" x 3/4"	24	0	254	0	250
9'-5"	1.5	CP0629	344	12	3/8	18	16	2 1/2	5 3/4	11	2 9/16	5 3/4	11	2 1/2	5 3/4	9/16" x 3/4"	18	196	284	338	290
10'-5"	1.5	CP0629	445	11	1/2	18	10	3 1/2	6 13/16	11	4 1/2	6 13/16	8	3 1/2	6 13/16	9/16" x 3/4"	18	897	315	1104	326
11'-5"	1.5	CP0630	546	9	5/8	18	10	4	6 7/8	10	4 1/2	6 7/8	8	4	6 7/8	11/16" x 7/8"	14	1589	346	1752	358
12'-5"	1.5	CP0630 & CP0647	548	7	3/4	18	8	4 3/4	7 1/2	9	5	7 1/2	N/A	N/A	N/A	13/16" x 1"	16	2415	380	2563	393

NOTES:
1. N/R - not required
2. * - non - windlock guide assembly
3. N/A - not available

Clopay
CLOPAY CORPORATION
8585 DUKE BOULEVARD
MASON, OH 45040

TITLE
TDI WINDLOAD CONFIGURATIONS, INSULATED ROLLING DOOR

SIZE	DRAWN	DWG NO	REV
D	R. MAGGIO	16-43 TDI TD	*

SCALE 1:1 SHEET 10 OF 16

L'TR	REVISION	DATE	BY	E.C.O.
*	ORIGINAL ISSUE	10/06/2010	R.M.	*

TABLE 9

20/24 GA. GALVANIZED OR STAINLESS STEEL - 30 P.S.F. IMPACT RATED

Distance Between Guides (D.B.G.) thru: (FT.- IN.)	Windlock Flat Location on Inner Angle (IN.)	Windlock	Guide Assembly Type	Windlock Flat Weld Pitch Spacing (IN.)	Fastener Diameter (IN.)	Assembly Fastener SAE Gr. 8 Maximum O.C. Spacing (IN.)	Wall Fasteners - Concrete Structure Min 3,000 PSI									Wall fasteners - Steel Structure Min 1/4" fillet weld entire slot perimeter or Gr. 8 bolt		Superimposed Loads POSITIVE (+)		Superimposed Loads NEGATIVE (-)	
							Hilti Kwik Bolt 3			Simpson Wedge-All			Powers Wedge-Bolt								
							Maximum O.C. Spacing (IN.)	Minimum Embedment (IN.)	Minimum Edge Distance (IN.)	Maximum O.C. Spacing (IN.)	Minimum Embedment (IN.)	Minimum Edge Distance (IN.)	Maximum O.C. Spacing (IN.)	Minimum Embedment (IN.)	Minimum Edge Distance (IN.)	Slot	Maximum O.C. Spacing (IN.)	Vx (LBS.)	Vy (LBS.)	Vx (LBS.)	Vy (LBS.)
2'-5"	N/R	N/R	344*	N/R	3/8	24	24	2 1/2	5 3/4	24	2 9/16	5 3/4	24	2 1/2	5 3/4	9/16" x 3/4"	24	0	37	0	35
3'-5"	N/R	N/R	344*	N/R	3/8	24	24	2 1/2	5 3/4	24	2 9/16	5 3/4	24	2 1/2	5 3/4	9/16" x 3/4"	24	0	52	0	50
4'-5"	N/R	N/R	344*	N/R	3/8	24	24	2 1/2	5 3/4	24	2 9/16	5 3/4	24	2 1/2	5 3/4	9/16" x 3/4"	24	0	67	0	65
5'-5"	N/R	N/R	344*	N/R	3/8	24	24	2 1/2	5 3/4	24	2 9/16	5 3/4	24	2 1/2	5 3/4	9/16" x 3/4"	24	0	82	0	80
6'-5"	N/R	N/R	344*	N/R	3/8	24	24	2 1/2	5 3/4	21	2 9/16	5 3/4	24	2 1/2	5 3/4	9/16" x 3/4"	24	0	97	0	95
7'-5"	N/R	N/R	344*	N/R	3/8	24	24	2 1/2	5 3/4	18	2 9/16	5 3/4	21	2 1/2	5 3/4	9/16" x 3/4"	24	0	112	0	110
8'-5"	N/R	N/R	344*	N/R	3/8	24	21	2 1/2	5 3/4	16	2 9/16	5 3/4	19	2 1/2	5 3/4	9/16" x 3/4"	24	0	127	0	125
9'-5"	N/R	N/R	344*	N/R	3/8	24	19	2 1/2	5 3/4	14	2 9/16	5 3/4	17	2 1/2	5 3/4	9/16" x 3/4"	24	0	142	0	140
10'-5"	N/R	N/R	344*	N/R	3/8	24	17	2 1/2	5 3/4	13	2 9/16	5 3/4	15	2 1/2	5 3/4	9/16" x 3/4"	24	0	157	0	155
11'-5"	N/R	N/R	344*	N/R	3/8	24	16	2 1/2	5 3/4	12	2 9/16	5 3/4	14	2 1/2	5 3/4	9/16" x 3/4"	24	0	172	0	170
12'-5"	N/R	N/R	344*	N/R	3/8	24	15	2 1/2	5 3/4	11	2 9/16	5 3/4	13	2 1/2	5 3/4	9/16" x 3/4"	24	0	187	0	185
13'-5"	1.5	CP0629	344	12	3/8	18	14	2 1/2	5 3/4	10	2 9/16	5 3/4	12	2 1/2	5 3/4	9/16" x 3/4"	18	16	202	45	204
14'-5"	1.5	CP0629	344	12	3/8	18	18	2 1/2	5 3/4	16	2 9/16	5 3/4	16	2 1/2	5 3/4	9/16" x 3/4"	18	150	217	169	219
15'-5"	1.5	CP0629	344	12	3/8	18	18	2 1/2	5 3/4	16	2 9/16	5 3/4	15	2 1/2	5 3/4	9/16" x 3/4"	18	270	232	282	233
16'-5"	1.5	CP0629	344	12	3/8	17	14	2 1/2	5 3/4	10	2 9/16	5 3/4	10	2 1/2	5 3/4	9/16" x 3/4"	18	473	247	483	249
17'-5"	1.5	CP0629	344	12	3/8	14	10	2 1/2	5 3/4	8	2 9/16	5 3/4	7	2 1/2	5 3/4	9/16" x 3/4"	18	663	262	672	264
18'-5"	2	CP0629	445	12	1/2	18	18	3 1/2	6 13/16	18	4 1/2	6 13/16	15	3 1/2	6 13/16	9/16" x 3/4"	18	511	276	526	279
19'-5"	2	CP0629	445	12	1/2	18	16	3 1/2	6 13/16	17	4 1/2	6 13/16	12	3 1/2	6 13/16	9/16" x 3/4"	18	657	291	671	294
20'-5"	2	CP0629	445	12	1/2	18	13	3 1/2	6 13/16	14	4 1/2	6 13/16	10	3 1/2	6 13/16	9/16" x 3/4"	18	798	306	810	309
21'-5"	2	CP0629	445	12	1/2	18	11	3 1/2	6 13/16	12	4 1/2	6 13/16	9	3 1/2	6 13/16	9/16" x 3/4"	18	934	321	944	324
22'-5"	2	CP0629	445	11	1/2	17	10	3 1/2	6 13/16	11	4 1/2	6 13/16	7	3 1/2	6 13/16	9/16" x 3/4"	18	1066	336	1076	339
23'-5"	2	CP0630	446	10	5/8	18	13	4	6 7/8	13	4 1/2	6 7/8	10	4	6 7/8	11/16" x 7/8"	18	1239	351	1249	354
24'-5"	2	CP0630	446	10	5/8	18	11	4	6 7/8	12	4 1/2	6 7/8	9	4	6 7/8	11/16" x 7/8"	16	1370	366	1379	369
25'-5"	2	CP0630	546	10	5/8	18	11	4	6 7/8	11	4 1/2	6 7/8	8	4	6 7/8	11/16" x 7/8"	15	1500	381	1508	384

TABLE 10

20/24 GA. GALVANIZED OR STAINLESS STEEL - 40 P.S.F. IMPACT RATED

Distance Between Guides (D.B.G.) thru: (FT.- IN.)	Windlock Flat Location on Inner Angle (IN.)	Windlock	Guide Assembly Type	Windlock Flat Weld Pitch Spacing (IN.)	Fastener Diameter (IN.)	Assembly Fastener SAE Gr. 8 Maximum O.C. Spacing	Wall Fasteners - Concrete Structure Min 3,000 PSI									Wall fasteners - Steel Structure Min 1/4" fillet		Superimposed Loads POSITIVE (+)		Superimposed Loads NEGATIVE (-)	
							Hilti Kwik Bolt 3			Simpson Wedge-All			Powers Wedge-Bolt								
							Maximum O.C. Spacing (IN.)	Minimum Embedment (IN.)	Minimum Edge Distance (IN.)	Maximum O.C. Spacing (IN.)	Minimum Embedment (IN.)	Minimum Edge Distance (IN.)	Maximum O.C. Spacing (IN.)	Minimum Embedment (IN.)	Minimum Edge Distance (IN.)	Slot	Maximum O.C. Spacing (IN.)	Vx (LBS.)	Vy (LBS.)	Vx (LBS.)	Vy (LBS.)
2'-5"	N/R	N/R	344*	N/R	3/8	24	24	2 1/2	5 3/4	24	2 9/16	5 3/4	24	2 1/2	5 3/4	9/16" x 3/4"	24	0	50	0	47
3'-5"	N/R	N/R	344*	N/R	3/8	24	24	2 1/2	5 3/4	24	2 9/16	5 3/4	24	2 1/2	5 3/4	9/16" x 3/4"	24	0	70	0	67
4'-5"	N/R	N/R	344*	N/R	3/8	24	24	2 1/2	5 3/4	23	2 9/16	5 3/4	24	2 1/2	5 3/4	9/16" x 3/4"	24	0	90	0	87
5'-5"	N/R	N/R	344*	N/R	3/8	24	24	2 1/2	5 3/4	19	2 9/16	5 3/4	22	2 1/2	5 3/4	9/16" x 3/4"	24	0	110	0	107
6'-5"	N/R	N/R	344*	N/R	3/8	24	21	2 1/2	5 3/4	16	2 9/16	5 3/4	19	2 1/2	5 3/4	9/16" x 3/4"	24	0	130	0	127
7'-5"	N/R	N/R	344*	N/R	3/8	24	18	2 1/2	5 3/4	14	2 9/16	5 3/4	16	2 1/2	5 3/4	9/16" x 3/4"	24	0	150	0	147
8'-5"	N/R	N/R	344*	N/R	3/8	24	16	2 1/2	5 3/4	12	2 9/16	5 3/4	14	2 1/2	5 3/4	9/16" x 3/4"	24	0	170	0	167
9'-5"	N/R	N/R	344*	N/R	3/8	24	14	2 1/2	5 3/4	11	2 9/16	5 3/4	13	2 1/2	5 3/4	9/16" x 3/4"	24	0	190	0	187
10'-5"	N/R	N/R	344*	N/R	3/8	24	13	2 1/2	5 3/4	10	2 9/16	5 3/4	11	2 1/2	5 3/4	9/16" x 3/4"	24	0	210	0	207
11'-5"	N/R	N/R	344*	N/R	3/8	24	12	2 1/2	5 3/4	9	2 9/16	5 3/4	10	2 1/2	5 3/4	9/16" x 3/4"	24	0	230	0	227
12'-5"	1.5	CP0629	344	12	3/8	18	18	2 1/2	5 3/4	15	2 9/16	5 3/4	14	2 1/2	5 3/4	9/16" x 3/4"	18	187	250	229	252
13'-5"	1.5	CP0629	344	12	3/8	18	17	2 1/2	5 3/4	13	2 9/16	5 3/4	12	2 1/2	5 3/4	9/16" x 3/4"	18	350	269	380	272
14'-5"	1.5	CP0629	344	12	3/8	16	13	2 1/2	5 3/4	10	2 9/16	5 3/4	9	2 1/2	5 3/4	9/16" x 3/4"	18	480	289	498	292
15'-5"	1.5	CP0629	344	12	3/8	13	10	2 1/2	5 3/4	8	2 9/16	5 3/4	7	2 1/2	5 3/4	9/16" x 3/4"	18	632	309	645	311
16'-5"	1.625	CP0629	445	12	1/2	18	14	3 1/2	6 13/16	15	4 1/2	6 13/16	10	3 1/2	6 13/16	9/16" x 3/4"	18	748	328	780	333
17'-5"	1.875	CP0629	445	12	1/2	18	13	3 1/2	6 13/16	14	4 1/2	6 13/16	10	3 1/2	6 13/16	9/16" x 3/4"	18	765	348	786	352
18'-5"	2	CP0629	445	12	1/2	18	12	3 1/2	6 13/16	12	4 1/2	6 13/16	9	3 1/2	6 13/16	9/16" x 3/4"	18	872	368	888	371
19'-5"	2	CP0629	445	11	1/2	16	10	3 1/2	6 13/16	11	4 1/2	6 13/16	8	3 1/2	6 13/16	9/16" x 3/4"	18	1048	387	1062	392
20'-5"	2	CP0630	446	10	5/8	18	12	4	6 7/8	12	4 1/2	6 7/8	10	4	6 7/8	11/16" x 7/8"	18	1265	408	1279	412
21'-5"	2	CP0630	546	10	5/8	18	11	4	6 7/8	11	4 1/2	6 7/8	9	4	6 7/8	11/16" x 7/8"	16	1436	428	1448	432
22'-5"	2	CP0630	546	9	5/8	18	10	4	6 7/8	10	4 1/2	6 7/8	8	4	6 7/8	11/16" x 7/8"	14	1604	448	1615	452
23'-5"	2.5	CP0630	548	10	3/4	18	16	4 3/4	7 1/2	14	5	7 1/2	13	5	7 1/2	13/16" x 1"	18	1415	467	1420	470
24'-5"	2.5	CP0630	548	9	3/4	18	14	4 3/4	7 1/2	13	5	7 1/2	11	5	7 1/2	13/16" x 1"	18	1557	487	1561	490
25'-5"	2.5	CP0630	548	9	3/4	18	13	4 3/4	7 1/2	12	5	7 1/2	11	5	7 1/2	13/16" x 1"	18	1698	507	1703	510

NOTES:
1. N/R - not required
2. * - non - windlock guide assembly
3. N/A - not available

CLOPAY CORPORATION
8585 DUKE BOULEVARD
MASON, OH 45040

TITLE
TDI WINDLOAD CONFIGURATIONS, INSULATED ROLLING DOOR

SIZE	DRAWN	DWG NO	REV
D	R. MAGGIO	16-43 TDI TD	*

SCALE 1:1 SHEET 11 OF 16

L'TR	REVISION	DATE	BY	E.C.O.
*	ORIGINAL ISSUE	10/06/2010	R.M.	*

TABLE 11 — 20/24 GA. GALVANIZED OR STAINLESS STEEL - 50 P.S.F. IMPACT RATED

Distance Between Guides (D.B.G.) thru: (FT.- IN.)	Windlock Flat Location on Inner Angle (IN.)	Windlock	Guide Assembly Type	Windlock Flat Weld Pitch Spacing (IN.)	Fastener Diameter (IN.)	Assembly Fastener SAE Gr. 8 Maximum O.C. Spacing (IN.)	Wall Fasteners - Concrete Structure Min 3,000 PSI									Wall fasteners - Steel Structure Min 1/4" fillet weld entire slot perimeter or Gr. 8 bolt		Superimposed Loads POSITIVE (+)		Superimposed Loads NEGATIVE (-)	
							Hilti Kwik Bolt 3			Simpson Wedge-All			Powers Wedge-Bolt								
							Maximum O.C. Spacing (IN.)	Minimum Embedment (IN.)	Minimum Edge Distance (IN.)	Maximum O.C. Spacing (IN.)	Minimum Embedment (IN.)	Minimum Edge Distance (IN.)	Maximum O.C. Spacing (IN.)	Minimum Embedment (IN.)	Minimum Edge Distance (IN.)	Slot	Maximum O.C. Spacing (IN.)	Vx (LBS.)	Vy (LBS.)	Vx (LBS.)	Vy (LBS.)
2'-5"	N/R	N/R	344*	N/R	3/8	24	24	2 1/2	5 3/4	24	2 9/16	5 3/4	24	2 1/2	5 3/4	9/16" x 3/4"	24	0	62	0	58
3'-5"	N/R	N/R	344*	N/R	3/8	24	24	2 1/2	5 3/4	24	2 9/16	5 3/4	24	2 1/2	5 3/4	9/16" x 3/4"	24	0	87	0	83
4'-5"	N/R	N/R	344*	N/R	3/8	24	24	2 1/2	5 3/4	18	2 9/16	5 3/4	22	2 1/2	5 3/4	9/16" x 3/4"	24	0	112	0	108
5'-5"	N/R	N/R	344*	N/R	3/8	24	20	2 1/2	5 3/4	15	2 9/16	5 3/4	18	2 1/2	5 3/4	9/16" x 3/4"	24	0	137	0	133
6'-5"	N/R	N/R	344*	N/R	3/8	24	17	2 1/2	5 3/4	13	2 9/16	5 3/4	15	2 1/2	5 3/4	9/16" x 3/4"	24	0	162	0	158
7'-5"	N/R	N/R	344*	N/R	3/8	24	15	2 1/2	5 3/4	11	2 9/16	5 3/4	13	2 1/2	5 3/4	9/16" x 3/4"	24	0	187	0	183
8'-5"	N/R	N/R	344*	N/R	3/8	24	13	2 1/2	5 3/4	9	2 9/16	5 3/4	11	2 1/2	5 3/4	9/16" x 3/4"	24	0	212	0	208
9'-5"	N/R	N/R	344*	N/R	3/8	24	12	2 1/2	5 3/4	8	2 9/16	5 3/4	10	2 1/2	5 3/4	9/16" x 3/4"	24	0	237	0	233
10'-5"	1.5	CP0629	344	12	3/8	18	11	2 1/2	5 3/4	8	2 9/16	5 3/4	9	2 1/2	5 3/4	9/16" x 3/4"	18	40	262	126	266
11'-5"	1.5	CP0629	344	12	3/8	18	17	2 1/2	5 3/4	13	2 9/16	5 3/4	12	2 1/2	5 3/4	9/16" x 3/4"	18	308	287	369	291
12'-5"	1.5	CP0629	344	12	3/8	15	12	2 1/2	5 3/4	9	2 9/16	5 3/4	8	2 1/2	5 3/4	9/16" x 3/4"	18	511	312	554	316
13'-5"	1.5	CP0629	344	12	3/8	13	10	2 1/2	5 3/4	7	2 9/16	5 3/4	7	2 1/2	5 3/4	9/16" x 3/4"	18	669	337	698	340
14'-5"	1.5	CP0629	445	12	1/2	18	12	3 1/2	6 13/16	13	4 1/2	6 13/16	9	3 1/2	6 13/16	9/16" x 3/4"	18	830	361	887	368
15'-5"	1.5	CP0629	445	11	1/2	17	11	3 1/2	6 13/16	11	4 1/2	6 13/16	8	3 1/2	6 13/16	9/16" x 3/4"	18	997	386	1042	393
16'-5"	1.625	CP0629	445	11	1/2	15	10	3 1/2	6 13/16	10	4 1/2	6 13/16	7	3 1/2	6 13/16	9/16" x 3/4"	18	1116	411	1150	417
17'-5"	1.75	CP0630	446	10	5/8	18	12	4	6 7/8	12	4 1/2	6 7/8	9	4	6 7/8	11/16" x 7/8"	17	1295	436	1322	442
18'-5"	1.875	CP0630	546	10	5/8	18	11	4	6 7/8	11	4 1/2	6 7/8	9	4	6 7/8	11/16" x 7/8"	16	1396	460	1416	466
19'-5"	2	CP0630	546	10	5/8	18	10	4	6 7/8	10	4 1/2	6 7/8	8	4	6 7/8	11/16" x 7/8"	15	1493	485	1509	490
20'-5"	2	CP0630	546	9	5/8	17	9	4	6 7/8	9	4 1/2	6 7/8	7	4	6 7/8	11/16" x 7/8"	13	1698	510	1713	515
21'-5"	2.375	CP0630	548	9	3/4	18	14	4 3/4	7 1/2	13	5	7 1/2	11	5	7 1/2	13/16" x 1"	18	1592	534	1600	538
22'-5"	2.5	CP0630	548	9	3/4	18	13	4 3/4	7 1/2	12	5	7 1/2	11	5	7 1/2	13/16" x 1"	18	1685	559	1690	562
23'-5"	2.5	CP0630	548	9	3/4	18	12	4 3/4	7 1/2	11	5	7 1/2	10	5	7 1/2	13/16" x 1"	18	1856	584	1861	588
24'-5"	2.5	CP0630	648	8	3/4	18	11	4 3/4	7 1/2	10	5	7 1/2	9	5	7 1/2	13/16" x 1"	18	2027	609	2032	613
25'-5"	2.5	CP0630 & CP0647	648	8	3/4	18	9	4 3/4	7 1/2	9	5	7 1/2	N/A	N/A	N/A	13/16" x 1"	17	2197	634	2202	638

TABLE 12 — 20/24 GA. GALVANIZED OR STAINLESS STEEL - 60 P.S.F. IMPACT RATED

Distance Between Guides (D.B.G.) thru: (FT.- IN.)	Windlock Flat Location on Inner Angle (IN.)	Windlock	Guide Assembly Type	Windlock Flat Weld Pitch Spacing (IN.)	Fastener Diameter (IN.)	Assembly Fastener SAE Gr. 8 Maximum O.C. Spacing (IN.)	Wall Fasteners - Concrete Structure Min 3,000 PSI									Wall fasteners - Steel Structure Min 1/4" fillet weld entire slot perimeter or Gr. 8 bolt		Superimposed Loads POSITIVE (+)		Superimposed Loads NEGATIVE (-)	
							Hilti Kwik Bolt 3			Simpson Wedge-All			Powers Wedge-Bolt								
							Maximum O.C. Spacing (IN.)	Minimum Embedment (IN.)	Minimum Edge Distance (IN.)	Maximum O.C. Spacing (IN.)	Minimum Embedment (IN.)	Minimum Edge Distance (IN.)	Maximum O.C. Spacing (IN.)	Minimum Embedment (IN.)	Minimum Edge Distance (IN.)	Slot	Maximum O.C. Spacing (IN.)	Vx (LBS.)	Vy (LBS.)	Vx (LBS.)	Vy (LBS.)
2'-5"	N/R	N/R	344*	N/R	3/8	24	24	2 1/2	5 3/4	24	2 9/16	5 3/4	24	2 1/2	5 3/4	9/16" x 3/4"	24	0	74	0	70
3'-5"	N/R	N/R	344*	N/R	3/8	24	24	2 1/2	5 3/4	20	2 9/16	5 3/4	23	2 1/2	5 3/4	9/16" x 3/4"	24	0	104	0	100
4'-5"	N/R	N/R	344*	N/R	3/8	24	20	2 1/2	5 3/4	15	2 9/16	5 3/4	18	2 1/2	5 3/4	9/16" x 3/4"	24	0	134	0	130
5'-5"	N/R	N/R	344*	N/R	3/8	24	17	2 1/2	5 3/4	12	2 9/16	5 3/4	15	2 1/2	5 3/4	9/16" x 3/4"	24	0	164	0	160
6'-5"	N/R	N/R	344*	N/R	3/8	24	14	2 1/2	5 3/4	10	2 9/16	5 3/4	12	2 1/2	5 3/4	9/16" x 3/4"	24	0	194	0	190
7'-5"	N/R	N/R	344*	N/R	3/8	24	12	2 1/2	5 3/4	9	2 9/16	5 3/4	11	2 1/2	5 3/4	9/16" x 3/4"	24	0	224	0	220
8'-5"	N/R	N/R	344*	N/R	3/8	24	11	2 1/2	5 3/4	8	2 9/16	5 3/4	9	2 1/2	5 3/4	9/16" x 3/4"	24	0	254	0	250
9'-5"	N/R	N/R	344*	N/R	3/8	24	10	2 1/2	5 3/4	7	2 9/16	5 3/4	8	2 1/2	5 3/4	9/16" x 3/4"	18	0	284	0	289
10'-5"	1.5	CP0629	344	12	3/8	18	14	2 1/2	5 3/4	11	2 9/16	5 3/4	10	2 1/2	5 3/4	9/16" x 3/4"	18	362	314	449	320
11'-5"	1.5	CP0629	344	12	3/8	13	10	2 1/2	5 3/4	7	2 9/16	5 3/4	7	2 1/2	5 3/4	9/16" x 3/4"	18	621	345	683	350
12'-5"	1.312	CP0629	344	12	1/2	18	14 1/2	3 1/2	5 3/4	13	3 3/8	5 3/4	N/A	N/A	N/A	9/16" x 3/4"	18	685	374	685	378
13'-5"	1.5	CP0630	445	11	1/2	15	9	3 1/2	6 13/16	10	4 1/2	6 13/16	7	3 1/2	6 13/16	9/16" x 3/4"	18	1130	404	1207	413
14'-5"	1.5	CP0630	446	10	5/8	18	11	4	6 7/8	12	4 1/2	6 7/8	9	4	6 7/8	11/16" x 7/8"	17	1342	434	1403	443
15'-5"	1.5	CP0630	546	9	5/8	18	10	4	6 7/8	10	4 1/2	6 7/8	8	4	6 7/8	11/16" x 7/8"	15	1516	464	1565	473
16'-5"	1.5	CP0630	546	9	5/8	17	8	4	6 7/8	9	4 1/2	6 7/8	7	4	6 7/8	11/16" x 7/8"	13	1788	494	1830	503
17'-5"	1.625	CP0630	548	8	3/4	18	12	4 3/4	7 1/2	11	5	7 1/2	10	5	7 1/2	13/16" x 1"	18	1874	524	1911	533
18'-5"	1.75	CP0630	548	8	3/4	18	12	4 3/4	7 1/2	11	5	7 1/2	9	5	7 1/2	13/16" x 1"	18	1959	554	1989	562
19'-5"	1.875	CP0630	548	8	3/4	18	11	4 3/4	7 1/2	10	5	7 1/2	9	5	7 1/2	13/16" x 1"	18	2048	583	2071	591
20'-5"	2	CP0630	548	8	3/4	18	10	4 3/4	7 1/2	10	5	7 1/2	9	5	7 1/2	13/16" x 1"	17	2138	613	2156	620
21'-5"	2.25	CP0630	648	8	3/4	18	10	4 3/4	7 1/2	9	5	7 1/2	9	5	7 1/2	13/16" x 1"	17	2104	642	2115	648
22'-5"	2.375	CP0630 & CP0647	648	8	3/4	18	9	4 3/4	7 1/2	9	5	7 1/2	N/A	N/A	N/A	13/16" x 1"	17	2202	671	2210	676
23'-5"	2.5	CP0630 & CP0647	648	8	3/4	18	8	4 3/4	7 1/2	9	5	7 1/2	N/A	N/A	N/A	13/16" x 1"	16	2298	700	2303	705
24'-5"	2.5	CP0630 & CP0647	648	7	3/4	16	7	4 3/4	7 1/2	8	5	7 1/2	N/A	N/A	N/A	13/16" x 1"	15	2497	731	2502	736
25'-5"	2.5	CP0630 & CP0647	648	7	3/4	15	6	4 3/4	7 1/2	7	5	7 1/2	N/A	N/A	N/A	13/16" x 1"	14	2697	761	2702	766

TABLE 13 — 20/24 GA. GALVANIZED OR STAINLESS STEEL - 120 P.S.F. IMPACT RATED

Distance Between Guides (D.B.G.) thru: (FT.- IN.)	Windlock Flat Location on Inner Angle (IN.)	Windlock	Guide Assembly Type	Windlock Flat Weld Pitch Spacing (IN.)	Fastener Diameter (IN.)	Assembly Fastener SAE Gr. 8 Maximum O.C. Spacing (IN.)	Wall Fasteners - Concrete Structure Min 3,000 PSI									Wall fasteners - Steel Structure (See note 4)		Superimposed Loads POSITIVE (+)		Superimposed Loads NEGATIVE (-)	
							Hilti Kwik Bolt 3			Simpson Wedge-All			Powers Wedge-Bolt								
							Maximum O.C. Spacing (IN.)	Minimum Embedment (IN.)	Minimum Edge Distance (IN.)	Maximum O.C. Spacing (IN.)	Minimum Embedment (IN.)	Minimum Edge Distance (IN.)	Maximum O.C. Spacing (IN.)	Minimum Embedment (IN.)	Minimum Edge Distance (IN.)	Slot	Maximum O.C. Spacing (IN.)	Vx (LBS.)	Vy (LBS.)	Vx (LBS.)	Vy (LBS.)
14'-5"	1.5	CP0630 & CP0647	548	7	3/4	17	11	4 3/4	7 1/2	9 1/2	5	7 1/2	N/A	N/A	N/A	13/16" x 1"	10	3223	871	3298	890

NOTES:
1. N/R - not required
2. * - non - windlock guide assembly
3. N/A - not available
4. 1/4" Fillet weld entire perimeter of slot and 4" long at toe of wall angle or SAE Grade 8 bolt.

Clopay
CLOPAY CORPORATION
8585 DUKE BOULEVARD
MASON, OH 45040

TITLE
TDI WINDLOAD CONFIGURATIONS, INSULATED ROLLING DOOR

SIZE	DRAWN	DWG NO	REV
D	R. MAGGIO	16-43 TDI TD	*

SCALE 1:1 SHEET 12 OF 16

L'TR	REVISION	DATE	BY	E.C.O.
*	ORIGINAL ISSUE	10/06/2010	R.M.	*

TABLE 14

18/24 GA. GALVANIZED OR STAINLESS STEEL - 30 P.S.F. IMPACT RATED

Distance Between Guides (D.B.G.) thru: (FT.- IN.)	Windlock Flat Location on Inner Angle (IN.)	Windlock	Guide Assembly Type	Windlock Flat Weld Pitch Spacing (IN.)	Fastener Diameter (IN.)	Assembly Fastener SAE Gr. 8 Maximum O.C. Spacing (IN.)	Wall Fasteners - Concrete Structure Min 3,000 PSI									Wall fasteners - Steel Structure Min 1/4" fillet weld entire slot perimeter or Gr. 8 bolt		Superimposed Loads POSITIVE (+)		Superimposed Loads NEGATIVE (-)	
							Hilti Kwik Bolt 3			Simpson Wedge-All			Powers Wedge-Bolt								
							Maximum O.C. Spacing (IN.)	Minimum Embedment (IN.)	Minimum Edge Distance (IN.)	Maximum O.C. Spacing (IN.)	Minimum Embedment (IN.)	Minimum Edge Distance (IN.)	Maximum O.C. Spacing (IN.)	Minimum Embedment (IN.)	Minimum Edge Distance (IN.)	Slot	Maximum O.C. Spacing (IN.)	Vx (LBS.)	Vy (LBS.)	Vx (LBS.)	Vy (LBS.)
2'-5"	N/R	N/R	344*	N/R	3/8	24	24	2 1/2	5 3/4	24	2 9/16	5 3/4	24	2 1/2	5 3/4	9/16" x 3/4"	24	0	37	0	35
3'-5"	N/R	N/R	344*	N/R	3/8	24	24	2 1/2	5 3/4	24	2 9/16	5 3/4	24	2 1/2	5 3/4	9/16" x 3/4"	24	0	52	0	50
4'-5"	N/R	N/R	344*	N/R	3/8	24	24	2 1/2	5 3/4	24	2 9/16	5 3/4	24	2 1/2	5 3/4	9/16" x 3/4"	24	0	67	0	65
5'-5"	N/R	N/R	344*	N/R	3/8	24	24	2 1/2	5 3/4	24	2 9/16	5 3/4	24	2 1/2	5 3/4	9/16" x 3/4"	24	0	82	0	80
6'-5"	N/R	N/R	344*	N/R	3/8	24	24	2 1/2	5 3/4	21	2 9/16	5 3/4	24	2 1/2	5 3/4	9/16" x 3/4"	24	0	97	0	95
7'-5"	N/R	N/R	344*	N/R	3/8	24	24	2 1/2	5 3/4	18	2 9/16	5 3/4	21	2 1/2	5 3/4	9/16" x 3/4"	24	0	112	0	110
8'-5"	N/R	N/R	344*	N/R	3/8	24	21	2 1/2	5 3/4	16	2 9/16	5 3/4	19	2 1/2	5 3/4	9/16" x 3/4"	24	0	127	0	125
9'-5"	N/R	N/R	344*	N/R	3/8	24	19	2 1/2	5 3/4	14	2 9/16	5 3/4	17	2 1/2	5 3/4	9/16" x 3/4"	24	0	142	0	140
10'-5"	N/R	N/R	344*	N/R	3/8	24	17	2 1/2	5 3/4	13	2 9/16	5 3/4	15	2 1/2	5 3/4	9/16" x 3/4"	24	0	157	0	155
11'-5"	N/R	N/R	344*	N/R	3/8	24	16	2 1/2	5 3/4	12	2 9/16	5 3/4	14	2 1/2	5 3/4	9/16" x 3/4"	24	0	172	0	170
12'-5"	N/R	N/R	344*	N/R	3/8	24	15	2 1/2	5 3/4	11	2 9/16	5 3/4	13	2 1/2	5 3/4	9/16" x 3/4"	24	0	187	0	185
13'-5"	N/R	N/R	344*	N/R	3/8	24	14	2 1/2	5 3/4	10	2 9/16	5 3/4	12	2 1/2	5 3/4	9/16" x 3/4"	24	0	202	0	200
14'-5"	1.5	CP0629	344	12	3/8	18	14	2 1/2	5 3/4	10	2 9/16	5 3/4	12	2 1/2	5 3/4	9/16" x 3/4"	18	44	217	91	219
15'-5"	1.5	CP0629	344	12	3/8	18	18	2 1/2	5 3/4	19	2 9/16	5 3/4	17	2 1/2	5 3/4	9/16" x 3/4"	18	216	232	252	234
16'-5"	1.5	CP0629	344	12	3/8	18	17	2 1/2	5 3/4	13	2 9/16	5 3/4	12	2 1/2	5 3/4	9/16" x 3/4"	18	357	247	383	249
17'-5"	1.5	CP0629	344	12	3/8	17	14	2 1/2	5 3/4	10	2 9/16	5 3/4	9	2 1/2	5 3/4	9/16" x 3/4"	18	472	262	492	264
18'-5"	1.5	CP0629	344	12	3/8	15	12	2 1/2	5 3/4	9	2 9/16	5 3/4	8	2 1/2	5 3/4	9/16" x 3/4"	18	571	277	585	279
19'-5"	1.5	CP0629	445	12	1/2	18	15	3 1/2	6 13/16	15	4 1/2	6 13/16	11	3 1/2	6 13/16	9/16" x 3/4"	18	713	292	747	296
20'-5"	1.625	CP0629	445	12	1/2	18	13	3 1/2	6 13/16	14	4 1/2	6 13/16	10	3 1/2	6 13/16	9/16" x 3/4"	18	782	306	809	310
21'-5"	1.75	CP0629	445	12	1/2	18	12	3 1/2	6 13/16	13	4 1/2	6 13/16	9	3 1/2	6 13/16	9/16" x 3/4"	18	852	321	873	325
22'-5"	2	CP0629	445	12	1/2	18	12	3 1/2	6 13/16	13	4 1/2	6 13/16	9	3 1/2	6 13/16	9/16" x 3/4"	18	838	336	852	339
23'-5"	2	CP0629	445	12	1/2	17	11	3 1/2	6 13/16	11	4 1/2	6 13/16	8	3 1/2	6 13/16	9/16" x 3/4"	18	987	351	1000	354
24'-5"	2	CP0629	445	11	1/2	15	10	3 1/2	6 13/16	10	4 1/2	6 13/16	7	3 1/2	6 13/16	9/16" x 3/4"	18	1132	366	1144	369
25'-5"	2	CP0630	446	10	5/8	18	12	4	6 7/8	12	4 1/2	6 7/8	9	4	6 7/8	11/16" x 7/8"	17	1322	381	1334	384

TABLE 15

18/24 GA. GALVANIZED OR STAINLESS STEEL - 40 P.S.F. IMPACT RATED

Distance Between Guides (D.B.G.) thru: (FT.- IN.)	Windlock Flat Location on Inner Angle (IN.)	Windlock	Guide Assembly Type	Windlock Flat Weld Pitch Spacing (IN.)	Fastener Diameter (IN.)	Assembly Fastener SAE Gr. 8 Maximum O.C. Spacing (IN.)	Wall Fasteners - Concrete Structure Min 3,000 PSI									Wall fasteners - Steel Structure Min 1/4" fillet weld entire slot perimeter or Gr. 8 bolt		Superimposed Loads POSITIVE (+)		Superimposed Loads NEGATIVE (-)	
							Hilti Kwik Bolt 3			Simpson Wedge-All			Powers Wedge-Bolt								
							Maximum O.C. Spacing (IN.)	Minimum Embedment (IN.)	Minimum Edge Distance (IN.)	Maximum O.C. Spacing (IN.)	Minimum Embedment (IN.)	Minimum Edge Distance (IN.)	Maximum O.C. Spacing (IN.)	Minimum Embedment (IN.)	Minimum Edge Distance (IN.)	Slot	Maximum O.C. Spacing (IN.)	Vx (LBS.)	Vy (LBS.)	Vx (LBS.)	Vy (LBS.)
2'-5"	N/R	N/R	344*	N/R	3/8	24	24	2 1/2	5 3/4	24	2 9/16	5 3/4	24	2 1/2	5 3/4	9/16" x 3/4"	24	0	50	0	47
3'-5"	N/R	N/R	344*	N/R	3/8	24	24	2 1/2	5 3/4	24	2 9/16	5 3/4	24	2 1/2	5 3/4	9/16" x 3/4"	24	0	70	0	67
4'-5"	N/R	N/R	344*	N/R	3/8	24	24	2 1/2	5 3/4	23	2 9/16	5 3/4	24	2 1/2	5 3/4	9/16" x 3/4"	24	0	90	0	87
5'-5"	N/R	N/R	344*	N/R	3/8	24	24	2 1/2	5 3/4	19	2 9/16	5 3/4	22	2 1/2	5 3/4	9/16" x 3/4"	24	0	110	0	107
6'-5"	N/R	N/R	344*	N/R	3/8	24	21	2 1/2	5 3/4	16	2 9/16	5 3/4	19	2 1/2	5 3/4	9/16" x 3/4"	24	0	130	0	127
7'-5"	N/R	N/R	344*	N/R	3/8	24	18	2 1/2	5 3/4	14	2 9/16	5 3/4	16	2 1/2	5 3/4	9/16" x 3/4"	24	0	150	0	147
8'-5"	N/R	N/R	344*	N/R	3/8	24	16	2 1/2	5 3/4	12	2 9/16	5 3/4	14	2 1/2	5 3/4	9/16" x 3/4"	24	0	170	0	167
9'-5"	N/R	N/R	344*	N/R	3/8	24	14	2 1/2	5 3/4	11	2 9/16	5 3/4	13	2 1/2	5 3/4	9/16" x 3/4"	24	0	190	0	187
10'-5"	N/R	N/R	344*	N/R	3/8	24	13	2 1/2	5 3/4	10	2 9/16	5 3/4	11	2 1/2	5 3/4	9/16" x 3/4"	24	0	210	0	207
11'-5"	N/R	N/R	344*	N/R	3/8	24	12	2 1/2	5 3/4	9	2 9/16	5 3/4	10	2 1/2	5 3/4	9/16" x 3/4"	24	0	230	0	227
12'-5"	1.5	CP0629	344	12	3/8	18	12	2 1/2	5 3/4	9	2 9/16	5 3/4	10	2 1/2	5 3/4	9/16" x 3/4"	18	44	250	128	253
13'-5"	1.5	CP0629	344	12	3/8	18	18	2 1/2	5 3/4	14	2 9/16	5 3/4	12	2 1/2	5 3/4	9/16" x 3/4"	18	300	270	364	273
14'-5"	1.5	CP0629	344	12	3/8	16	12	2 1/2	5 3/4	9	2 9/16	5 3/4	8	2 1/2	5 3/4	9/16" x 3/4"	18	508	290	556	293
15'-5"	1.5	CP0629	344	12	3/8	13	10	2 1/2	5 3/4	7	2 9/16	5 3/4	7	2 1/2	5 3/4	9/16" x 3/4"	18	673	310	710	313
16'-5"	1.5	CP0629	445	12	1/2	18	13	3 1/2	6 13/16	13	4 1/2	6 13/16	10	3 1/2	6 13/16	9/16" x 3/4"	18	812	329	878	335
17'-5"	1.5	CP0629	445	12	1/2	18	11	3 1/2	6 13/16	12	4 1/2	6 13/16	9	3 1/2	6 13/16	9/16" x 3/4"	18	927	349	980	355
18'-5"	1.5	CP0629	445	11	1/2	17	10	3 1/2	6 13/16	11	4 1/2	6 13/16	8	3 1/2	6 13/16	9/16" x 3/4"	18	1021	369	1063	374
19'-5"	1.625	CP0630	445	11	1/2	15	9	3 1/2	6 13/16	10	4 1/2	6 13/16	7	3 1/2	6 13/16	9/16" x 3/4"	17	1142	389	1175	394
20'-5"	1.75	CP0630	446	10	5/8	18	13	4	6 7/8	13	4 1/2	6 7/8	10	4	6 7/8	11/16" x 7/8"	18	1220	409	1245	413
21'-5"	1.875	CP0630	446	10	5/8	18	12	4	6 7/8	12	4 1/2	6 7/8	9	4	6 7/8	11/16" x 7/8"	17	1298	428	1318	433
22'-5"	2	CP0630	546	10	5/8	18	11	4	6 7/8	11	4 1/2	6 7/8	9	4	6 7/8	11/16" x 7/8"	16	1376	448	1391	452
23'-5"	2	CP0630	546	9	5/8	18	10	4	6 7/8	10	4 1/2	6 7/8	8	4	6 7/8	11/16" x 7/8"	14	1561	468	1575	472
24'-5"	2	CP0630	546	9	5/8	17	8	4	6 7/8	9	4 1/2	6 7/8	7	4	6 7/8	11/16" x 7/8"	13	1743	488	1756	492
25'-5"	2.5	CP0630	548	9	3/4	18	14	4 3/4	7 1/2	13	5	7 1/2	12	5	7 1/2	13/16" x 1"	18	1522	507	1528	510

NOTES:
1. N/R - not required
2. * - non - windlock guide assembly
3. N/A - not available

Clopay
CLOPAY CORPORATION
8585 DUKE BOULEVARD
MASON, OH 45040

TITLE
TDI WINDLOAD CONFIGURATIONS,
INSULATED ROLLING DOOR

SIZE	DRAWN	DWG NO	REV
D	R. MAGGIO	16-43 TDI TD	*

SCALE 1:1 SHEET 13 OF 16

L'TR	REVISION	DATE	BY	E.C.O.
*	ORIGINAL ISSUE	10/06/2010	R.M.	*

TABLE 16 — 18/24 GA. GALVANIZED OR STAINLESS STEEL - 50 P.S.F. IMPACT RATED

Distance Between Guides (D.B.G.) thru: (FT.- IN.)	Windlock Flat Location on Inner Angle (IN.)	Windlock	Guide Assembly Type	Windlock Flat Weld Pitch Spacing (IN.)	Fastener Diameter (IN.)	Assembly Fastener SAE Gr. 8 Maximum O.C. Spacing (IN.)	Wall Fasteners - Concrete Structure Min 3,000 PSI									Wall fasteners - Steel Structure Min 1/4" fillet weld entire slot perimeter or Gr. 8 bolt		Superimposed Loads POSITIVE (+)		Superimposed Loads NEGATIVE (-)	
							Hilti Kwik Bolt 3			Simpson Wedge-All			Powers Wedge-Bolt								
							Maximum O.C. Spacing (IN.)	Minimum Embedment (IN.)	Minimum Edge Distance (IN.)	Maximum O.C. Spacing (IN.)	Minimum Embedment (IN.)	Minimum Edge Distance (IN.)	Maximum O.C. Spacing (IN.)	Minimum Embedment (IN.)	Minimum Edge Distance (IN.)	Slot	Maximum O.C. Spacing (IN.)	Vx (LBS.)	Vy (LBS.)	Vx (LBS.)	Vy (LBS.)
2'-5"	N/R	N/R	344*	N/R	3/8	24	24	2 1/2	5 3/4	24	2 9/16	5 3/4	24	2 1/2	5 3/4	9/16" x 3/4"	24	0	62	0	58
3'-5"	N/R	N/R	344*	N/R	3/8	24	24	2 1/2	5 3/4	24	2 9/16	5 3/4	24	2 1/2	5 3/4	9/16" x 3/4"	24	0	87	0	83
4'-5"	N/R	N/R	344*	N/R	3/8	24	24	2 1/2	5 3/4	18	2 9/16	5 3/4	22	2 1/2	5 3/4	9/16" x 3/4"	24	0	112	0	108
5'-5"	N/R	N/R	344*	N/R	3/8	24	20	2 1/2	5 3/4	15	2 9/16	5 3/4	18	2 1/2	5 3/4	9/16" x 3/4"	24	0	137	0	133
6'-5"	N/R	N/R	344*	N/R	3/8	24	17	2 1/2	5 3/4	13	2 9/16	5 3/4	15	2 1/2	5 3/4	9/16" x 3/4"	24	0	162	0	158
7'-5"	N/R	N/R	344*	N/R	3/8	24	15	2 1/2	5 3/4	11	2 9/16	5 3/4	13	2 1/2	5 3/4	9/16" x 3/4"	24	0	187	0	183
8'-5"	N/R	N/R	344*	N/R	3/8	24	13	2 1/2	5 3/4	9	2 9/16	5 3/4	11	2 1/2	5 3/4	9/16" x 3/4"	24	0	212	0	208
9'-5"	N/R	N/R	344*	N/R	3/8	24	12	2 1/2	5 3/4	8	2 9/16	5 3/4	10	2 1/2	5 3/4	9/16" x 3/4"	24	0	237	0	233
10'-5"	N/R	N/R	344*	N/R	3/8	24	10	2 1/2	5 3/4	8	2 9/16	5 3/4	9	2 1/2	5 3/4	9/16" x 3/4"	24	0	262	0	258
11'-5"	1.5	CP0629	344	12	3/8	18	15	2 1/2	5 3/4	11	2 9/16	5 3/4	11	2 1/2	5 3/4	9/16" x 3/4"	18	175	287	289	291
12'-5"	1.5	CP0629	344	12	3/8	15	12	2 1/2	5 3/4	9	2 9/16	5 3/4	8	2 1/2	5 3/4	9/16" x 3/4"	18	496	312	581	317
13'-5"	1.5	CP0629	445	12	1/2	18	13	3 1/2	6 13/16	14	4 1/2	6 13/16	10	3 1/2	6 13/16	9/16" x 3/4"	18	750	337	883	345
14'-5"	1.5	CP0629	445	11	1/2	18	11	3 1/2	6 13/16	11	4 1/2	6 13/16	8	3 1/2	6 13/16	9/16" x 3/4"	18	950	362	1056	370
15'-5"	1.5	CP0630	445	11	1/2	16	9	3 1/2	6 13/16	10	4 1/2	6 13/16	7	3 1/2	6 13/16	9/16" x 3/4"	18	1114	387	1196	395
16'-5"	1.5	CP0630	446	10	5/8	18	12	4	6 7/8	12	4 1/2	6 7/8	10	4	6 7/8	11/16" x 7/8"	18	1247	412	1313	419
17'-5"	1.5	CP0630	446	10	5/8	18	11	4	6 7/8	11	4 1/2	6 7/8	9	4	6 7/8	11/16" x 7/8"	17	1358	437	1410	444
18'-5"	1.5	CP0630	546	9	5/8	18	10	4	6 7/8	10	4 1/2	6 7/8	8	4	6 7/8	11/16" x 7/8"	14	1567	462	1611	469
19'-5"	1.625	CP0630	546	9	5/8	18	10	4	6 7/8	9	4 1/2	6 7/8	8	4	6 7/8	11/16" x 7/8"	14	1634	486	1669	493
20'-5"	1.75	CP0630	546	9	5/8	17	9	4	6 7/8	9	4 1/2	6 7/8	7	4	6 7/8	11/16" x 7/8"	13	1710	511	1738	517
21'-5"	1.875	CP0630	548	9	3/4	18	13	4 3/4	7 1/2	12	5	7 1/2	10	5	7 1/2	13/16" x 1"	18	1798	536	1822	542
22'-5"	2	CP0630	548	8	3/4	18	12	4 3/4	7 1/2	11	5	7 1/2	10	5	7 1/2	13/16" x 1"	18	1880	561	1899	566
23'-5"	2.125	CP0630	548	8	3/4	18	11	4 3/4	7 1/2	10	5	7 1/2	9	5	7 1/2	13/16" x 1"	18	1962	586	1977	591
24'-5"	2.25	CP0630 & CP0647	548	8	3/4	18	11	4 3/4	7 1/2	10	5	7 1/2	9	5	7 1/2	13/16" x 1"	18	2044	610	2055	615
25'-5"	2.5	CP0630 & CP0647	648	8	3/4	18	11	4 3/4	7 1/2	10	5	7 1/2	9	5	7 1/2	13/16" x 1"	18	2021	634	2027	638

TABLE 17 — 18/24 GA. GALVANIZED OR STAINLESS STEEL - 60 P.S.F. IMPACT RATED

Distance Between Guides (D.B.G.) thru: (FT.- IN.)	Windlock Flat Location on Inner Angle (IN.)	Windlock	Guide Assembly Type	Windlock Flat Weld Pitch Spacing (IN.)	Fastener Diameter (IN.)	Assembly Fastener SAE Gr. 8 Maximum O.C. Spacing (IN.)	Wall Fasteners - Concrete Structure Min 3,000 PSI									Wall fasteners - Steel Structure Min 1/4" fillet weld entire slot perimeter or Gr. 8 bolt		Superimposed Loads POSITIVE (+)		Superimposed Loads NEGATIVE (-)	
							Hilti Kwik Bolt 3			Simpson Wedge-All			Powers Wedge-Bolt								
							Maximum O.C. Spacing (IN.)	Minimum Embedment (IN.)	Minimum Edge Distance (IN.)	Maximum O.C. Spacing (IN.)	Minimum Embedment (IN.)	Minimum Edge Distance (IN.)	Maximum O.C. Spacing (IN.)	Minimum Embedment (IN.)	Minimum Edge Distance (IN.)	Slot	Maximum O.C. Spacing (IN.)	Vx (LBS.)	Vy (LBS.)	Vx (LBS.)	Vy (LBS.)
2'-5"	N/R	N/R	344*	N/R	3/8	24	24	2 1/2	5 3/4	24	2 9/16	5 3/4	24	2 1/2	5 3/4	9/16" x 3/4"	24	0	74	0	70
3'-5"	N/R	N/R	344*	N/R	3/8	24	24	2 1/2	5 3/4	20	2 9/16	5 3/4	23	2 1/2	5 3/4	9/16" x 3/4"	24	0	104	0	100
4'-5"	N/R	N/R	344*	N/R	3/8	24	20	2 1/2	5 3/4	15	2 9/16	5 3/4	18	2 1/2	5 3/4	9/16" x 3/4"	24	0	134	0	130
5'-5"	N/R	N/R	344*	N/R	3/8	24	17	2 1/2	5 3/4	12	2 9/16	5 3/4	15	2 1/2	5 3/4	9/16" x 3/4"	24	0	164	0	160
6'-5"	N/R	N/R	344*	N/R	3/8	24	14	2 1/2	5 3/4	10	2 9/16	5 3/4	12	2 1/2	5 3/4	9/16" x 3/4"	24	0	194	0	190
7'-5"	N/R	N/R	344*	N/R	3/8	24	12	2 1/2	5 3/4	9	2 9/16	5 3/4	11	2 1/2	5 3/4	9/16" x 3/4"	24	0	224	0	220
8'-5"	N/R	N/R	344*	N/R	3/8	24	11	2 1/2	5 3/4	8	2 9/16	5 3/4	9	2 1/2	5 3/4	9/16" x 3/4"	24	0	254	0	250
9'-5"	N/R	N/R	344*	N/R	3/8	24	10	2 1/2	5 3/4	7	2 9/16	5 3/4	8	2 1/2	5 3/4	9/16" x 3/4"	24	0	284	0	280
10'-5"	1.5	CP0629	344	12	3/8	18	14	2 1/2	5 3/4	10	2 9/16	5 3/4	10	2 1/2	5 3/4	9/16" x 3/4"	18	199	314	354	320
11'-5"	1.5	CP0629	344	12	3/8	13	10	2 1/2	5 3/4	7	2 9/16	5 3/4	7	2 1/2	5 3/4	9/16" x 3/4"	18	565	345	679	350
12'-5"	1.313	CP0629	344	12	1/2	18	14 1/2	3 1/2	5 3/4	13	3 3/8	5 3/4	N/A	N/A	N/A	9/16" x 3/4"	18	612	377	647	381
13'-5"	1.5	CP0630	446	10	5/8	18	12	4	6 7/8	13	4 1/2	6 7/8	10	4	6 7/8	11/16" x 7/8"	18	1178	405	1310	415
14'-5"	1.5	CP0630	446	10	5/8	18	11	4	6 7/8	11	4 1/2	6 7/8	9	4	6 7/8	11/16" x 7/8"	16	1373	435	1478	444
15'-5"	1.5	CP0630	546	9	5/8	18	10	4	6 7/8	10	4 1/2	6 7/8	8	4	6 7/8	11/16" x 7/8"	15	1539	465	1622	474
16'-5"	1.5	CP0630	546	9	5/8	17	8	4	6 7/8	9	4 1/2	6 7/8	7	4	6 7/8	11/16" x 7/8"	13	1765	495	1834	504
17'-5"	1.5	CP0630	548	8	3/4	18	12	4 3/4	7 1/2	11	5	7 1/2	9	5	7 1/2	13/16" x 1"	18	1966	525	2028	535
18'-5"	1.5	CP0630	548	8	3/4	18	11	4 3/4	7 1/2	10	5	7 1/2	9	5	7 1/2	13/16" x 1"	17	2121	555	2173	565
19'-5"	1.5	CP0630 & CP0647	648	7	3/4	18	8	4 3/4	7 1/2	9	5	7 1/2	10	5	7 1/2	13/16" x 1"	15	2409	585	2456	595
20'-5"	1.625	CP0630 & CP0647	648	7	3/4	18	8	4 3/4	7 1/2	9	5	7 1/2	N/A	N/A	N/A	13/16" x 1"	15	2442	615	2480	624
21'-5"	1.75	CP0630 & CP0647	648	7	3/4	18	7	4 3/4	7 1/2	8	5	7 1/2	N/A	N/A	N/A	13/16" x 1"	15	2495	644	2525	653
22'-5"	1.875	CP0630 & CP0647	648	7	3/4	17	7	4 3/4	7 1/2	8	5	7 1/2	N/A	N/A	N/A	13/16" x 1"	14	2559	674	2584	682
23'-5"	2	CP0630 & CP0647	648	7	3/4	17	6	4 3/4	7 1/2	7	5	7 1/2	N/A	N/A	N/A	13/16" x 1"	14	2630	703	2650	711
24'-5"	2.125	CP0630 & CP0647	648	7	3/4	16	6	4 3/4	7 1/2	8	5	7 1/2	N/A	N/A	N/A	13/16" x 1"	14	2706	733	2722	739
25'-5"	2.125	CP0630 & CP0647	648	7	3/4	15	6	4 3/4	7 1/2	7	5	7 1/2	N/A	N/A	N/A	13/16" x 1"	12	2945	763	2960	770

TABLE 18 — 18/24 GA. GALVANIZED OR STAINLESS STEEL - 120 P.S.F. IMPACT RATED

Distance Between Guides (D.B.G.) thru: (FT.- IN.)	Windlock Flat Location on Inner Angle (IN.)	Windlock	Guide Assembly Type	Windlock Flat Weld Pitch Spacing (IN.)	Fastener Diameter (IN.)	Assembly Fastener SAE Gr. 8 Maximum O.C. Spacing (IN.)	Wall Fasteners - Concrete Structure Min 3,000 PSI									Wall fasteners - Steel Structure (See note 4)		Superimposed Loads POSITIVE (+)		Superimposed Loads NEGATIVE (-)	
							Hilti Kwik Bolt 3			Simpson Wedge-All			Powers Wedge-Bolt								
							Maximum O.C. Spacing (IN.)	Minimum Embedment (IN.)	Minimum Edge Distance (IN.)	Maximum O.C. Spacing (IN.)	Minimum Embedment (IN.)	Minimum Edge Distance (IN.)	Maximum O.C. Spacing (IN.)	Minimum Embedment (IN.)	Minimum Edge Distance (IN.)	Slot	Maximum O.C. Spacing (IN.)	Vx (LBS.)	Vy (LBS.)	Vx (LBS.)	Vy (LBS.)
14'-5"	1.5	CP0630 & CP0647	548	7	3/4	17	11	4 3/4	7 1/2	9 1/2	5	7 1/2	N/A	N/A	N/A	13/16" x 1"	10	3223	871	3298	890

NOTES:
1. N/R - not required
2. * - non - windlock guide assembly
3. N/A - not available
4. 1/4" Fillet weld entire perimeter of slot and 4" long at toe of wall angle or SAE Grade 8 bolt.

Clopay
CLOPAY CORPORATION
8585 DUKE BOULEVARD
MASON, OH 45040

TITLE
TDI WINDLOAD CONFIGURATIONS, INSULATED ROLLING DOOR

SIZE	DRAWN	DWG NO	REV
D	R. MAGGIO	16-43 TDI TD	*

SCALE 1:1 SHEET 14 OF 16

L'TR	REVISION	DATE	BY	E.C.O.
*	ORIGINAL ISSUE	10/06/2010	R.M.	*

TABLE 19

22/22 GA. GALVANIZED OR STAINLESS STEEL - 30 P.S.F. NON-IMPACT RATED

Distance Between Guides (D.B.G.) thru: (FT.- IN.)	Windlock Flat Location on Inner Angle (IN.)	Windlock	Guide Assembly Type	Windlock Flat Weld Pitch Spacing (IN.)	Fastener Diameter (IN.)	Assembly Fastener SAE Gr. 8 Maximum O.C. Spacing (IN.)	Wall Fasteners - Concrete Structure Min 3,000 PSI									Wall fasteners - Steel Structure Min 1/4" fillet weld entire slot perimeter or Gr. 8 bolt		Superimposed Loads POSITIVE (+)		Superimposed Loads NEGATIVE (-)	
							Hilti Kwik Bolt 3			Simpson Wedge-All			Powers Wedge-Bolt								
							Maximum O.C. Spacing (IN.)	Minimum Embedment (IN.)	Minimum Edge Distance (IN.)	Maximum O.C. Spacing (IN.)	Minimum Embedment (IN.)	Minimum Edge Distance (IN.)	Maximum O.C. Spacing (IN.)	Minimum Embedment (IN.)	Minimum Edge Distance (IN.)	Slot	Maximum O.C. Spacing (IN.)	Vx (LBS.)	Vy (LBS.)	Vx (LBS.)	Vy (LBS.)
2'-5"	N/R	N/R	344*	N/R	3/8	24	24	2 1/2	5 3/4	24	2 9/16	5 3/4	24	2 1/2	5 3/4	9/16" x 3/4"	24	0	37	0	35
3'-5"	N/R	N/R	344*	N/R	3/8	24	24	2 1/2	5 3/4	24	2 9/16	5 3/4	24	2 1/2	5 3/4	9/16" x 3/4"	24	0	52	0	50
4'-5"	N/R	N/R	344*	N/R	3/8	24	24	2 1/2	5 3/4	24	2 9/16	5 3/4	24	2 1/2	5 3/4	9/16" x 3/4"	24	0	67	0	65
5'-5"	N/R	N/R	344*	N/R	3/8	24	24	2 1/2	5 3/4	24	2 9/16	5 3/4	24	2 1/2	5 3/4	9/16" x 3/4"	24	0	82	0	80
6'-5"	N/R	N/R	344*	N/R	3/8	24	24	2 1/2	5 3/4	21	2 9/16	5 3/4	24	2 1/2	5 3/4	9/16" x 3/4"	24	0	97	0	95
7'-5"	N/R	N/R	344*	N/R	3/8	24	24	2 1/2	5 3/4	18	2 9/16	5 3/4	21	2 1/2	5 3/4	9/16" x 3/4"	24	0	112	0	110
8'-5"	N/R	N/R	344*	N/R	3/8	24	21	2 1/2	5 3/4	16	2 9/16	5 3/4	19	2 1/2	5 3/4	9/16" x 3/4"	24	0	127	0	125
9'-5"	N/R	N/R	344*	N/R	3/8	24	19	2 1/2	5 3/4	14	2 9/16	5 3/4	17	2 1/2	5 3/4	9/16" x 3/4"	24	0	142	0	140
10'-5"	N/R	N/R	344*	N/R	3/8	24	17	2 1/2	5 3/4	13	2 9/16	5 3/4	15	2 1/2	5 3/4	9/16" x 3/4"	24	0	157	0	155
11'-5"	N/R	N/R	344*	N/R	3/8	24	16	2 1/2	5 3/4	12	2 9/16	5 3/4	14	2 1/2	5 3/4	9/16" x 3/4"	24	0	172	0	170
12'-5"	N/R	N/R	344*	N/R	3/8	24	15	2 1/2	5 3/4	11	2 9/16	5 3/4	13	2 1/2	5 3/4	9/16" x 3/4"	24	0	187	0	185
13'-5"	N/R	N/R	344*	N/R	3/8	24	14	2 1/2	5 3/4	10	2 9/16	5 3/4	12	2 1/2	5 3/4	9/16" x 3/4"	24	0	202	0	200
14'-5"	1.5	CP0629	344	12	3/8	18	18	2 1/2	5 3/4	18	2 9/16	5 3/4	18	2 1/2	5 3/4	9/16" x 3/4"	18	213	217	241	219
15'-5"	1.5	CP0629	344	12	3/8	18	17	2 1/2	5 3/4	13	2 9/16	5 3/4	12	2 1/2	5 3/4	9/16" x 3/4"	18	373	232	394	234
16'-5"	1.5	CP0629	344	12	3/8	17	13	2 1/2	5 3/4	10	2 9/16	5 3/4	9	2 1/2	5 3/4	9/16" x 3/4"	18	506	247	521	249
17'-5"	1.5	CP0629	344	12	3/8	14	11	2 1/2	5 3/4	8	2 9/16	5 3/4	8	2 1/2	5 3/4	9/16" x 3/4"	18	617	262	628	264
18'-5"	1.5	CP0629	445	12	1/2	18	14	3 1/2	6 13/16	14	4 1/2	6 13/16	10	3 1/2	6 13/16	9/16" x 3/4"	18	780	277	809	281
19'-5"	1.625	CP0629	445	12	1/2	18	13	3 1/2	6 13/16	13	4 1/2	6 13/16	10	3 1/2	6 13/16	9/16" x 3/4"	18	840	291	863	295
20'-5"	1.75	CP0629	445	12	1/2	18	12	3 1/2	6 13/16	13	4 1/2	6 13/16	9	3 1/2	6 13/16	9/16" x 3/4"	18	902	306	920	310
21'-5"	1.875	CP0629	445	12	1/2	18	11	3 1/2	6 13/16	12	4 1/2	6 13/16	9	3 1/2	6 13/16	9/16" x 3/4"	18	962	321	977	324
22'-5"	2	CP0629	445	12	1/2	17	11	3 1/2	6 13/16	11	4 1/2	6 13/16	8	3 1/2	6 13/16	9/16" x 3/4"	18	1022	336	1033	339
23'-5"	2	CP0629	445	11	1/2	15	9	3 1/2	6 13/16	10	4 1/2	6 13/16	7	3 1/2	6 13/16	9/16" x 3/4"	17	1156	351	1166	354
24'-5"	2	CP0630	446	10	5/8	18	12	4	6 7/8	12	4 1/2	6 7/8	9	4	6 7/8	11/16" x 7/8"	17	1333	366	1342	369
25'-5"	2	CP0630	546	10	5/8	18	11	4	6 7/8	11	4 1/2	6 7/8	9	4	6 7/8	11/16" x 7/8"	15	1466	381	1475	384

TABLE 20

22/22 GA. GALVANIZED OR STAINLESS STEEL - 40 P.S.F. NON-IMPACT RATED

Distance Between Guides (D.B.G.) thru: (FT.- IN.)	Windlock Flat Location on Inner Angle (IN.)	Windlock	Guide Assembly Type	Windlock Flat Weld Pitch Spacing (IN.)	Fastener Diameter (IN.)	Assembly Fastener SAE Gr. 8 Maximum O.C. Spacing (IN.)	Wall Fasteners - Concrete Structure Min 3,000 PSI									Wall fasteners - Steel Structure Min 1/4" fillet weld entire slot perimeter or Gr. 8 bolt		Superimposed Loads POSITIVE (+)		Superimposed Loads NEGATIVE (-)	
							Hilti Kwik Bolt 3			Simpson Wedge-All			Powers Wedge-Bolt								
							Maximum O.C. Spacing (IN.)	Minimum Embedment (IN.)	Minimum Edge Distance (IN.)	Maximum O.C. Spacing (IN.)	Minimum Embedment (IN.)	Minimum Edge Distance (IN.)	Maximum O.C. Spacing (IN.)	Minimum Embedment (IN.)	Minimum Edge Distance (IN.)	Slot	Maximum O.C. Spacing (IN.)	Vx (LBS.)	Vy (LBS.)	Vx (LBS.)	Vy (LBS.)
2'-5"	N/R	N/R	344*	N/R	3/8	24	24	2 1/2	5 3/4	24	2 9/16	5 3/4	24	2 1/2	5 3/4	9/16" x 3/4"	24	0	50	0	48
3'-5"	N/R	N/R	344*	N/R	3/8	24	24	2 1/2	5 3/4	24	2 9/16	5 3/4	24	2 1/2	5 3/4	9/16" x 3/4"	24	0	70	0	67
4'-5"	N/R	N/R	344*	N/R	3/8	24	24	2 1/2	5 3/4	23	2 9/16	5 3/4	24	2 1/2	5 3/4	9/16" x 3/4"	24	0	90	0	87
5'-5"	N/R	N/R	344*	N/R	3/8	24	24	2 1/2	5 3/4	19	2 9/16	5 3/4	22	2 1/2	5 3/4	9/16" x 3/4"	24	0	110	0	107
6'-5"	N/R	N/R	344*	N/R	3/8	24	21	2 1/2	5 3/4	16	2 9/16	5 3/4	19	2 1/2	5 3/4	9/16" x 3/4"	24	0	130	0	127
7'-5"	N/R	N/R	344*	N/R	3/8	24	18	2 1/2	5 3/4	14	2 9/16	5 3/4	16	2 1/2	5 3/4	9/16" x 3/4"	24	0	150	0	147
8'-5"	N/R	N/R	344*	N/R	3/8	24	16	2 1/2	5 3/4	12	2 9/16	5 3/4	14	2 1/2	5 3/4	9/16" x 3/4"	24	0	170	0	167
9'-5"	N/R	N/R	344*	N/R	3/8	24	14	2 1/2	5 3/4	11	2 9/16	5 3/4	13	2 1/2	5 3/4	9/16" x 3/4"	24	0	190	0	187
10'-5"	N/R	N/R	344*	N/R	3/8	24	13	2 1/2	5 3/4	10	2 9/16	5 3/4	11	2 1/2	5 3/4	9/16" x 3/4"	24	0	210	0	207
11'-5"	N/R	N/R	344*	N/R	3/8	24	12	2 1/2	5 3/4	9	2 9/16	5 3/4	10	2 1/2	5 3/4	9/16" x 3/4"	24	0	230	0	227
12'-5"	1.5	CP0629	344	12	3/8	18	18	2 1/2	5 3/4	15	2 9/16	5 3/4	13	2 1/2	5 3/4	9/16" x 3/4"	18	288	250	343	253
13'-5"	1.5	CP0629	344	12	3/8	16	12	2 1/2	5 3/4	9	2 9/16	5 3/4	8	2 1/2	5 3/4	9/16" x 3/4"	18	557	270	600	273
14'-5"	1.5	CP0629	445	12	1/2	18	13	3 1/2	6 13/16	14	4 1/2	6 13/16	10	3 1/2	6 13/16	9/16" x 3/4"	18	763	289	835	296
15'-5"	1.5	CP0629	445	12	1/2	18	11	3 1/2	6 13/16	12	4 1/2	6 13/16	9	3 1/2	6 13/16	9/16" x 3/4"	18	946	309	1005	316
16'-5"	1.5	CP0629	445	11	1/2	17	10	3 1/2	6 13/16	10	4 1/2	6 13/16	8	3 1/2	6 13/16	9/16" x 3/4"	18	1102	329	1151	336
17'-5"	1.5	CP0630	446	10	5/8	18	13	4	6 7/8	13	4 1/2	6 7/8	10	4	6 7/8	11/16" x 7/8"	18	1234	349	1272	355
18'-5"	1.5	CP0630	446	10	5/8	18	12	4	6 7/8	12	4 1/2	6 7/8	9	4	6 7/8	11/16" x 7/8"	17	1345	369	1377	375
19'-5"	1.5	CP0630	546	9	5/8	18	10	4	6 7/8	10	4 1/2	6 7/8	8	4	6 7/8	11/16" x 7/8"	14	1572	390	1601	396
20'-5"	1.625	CP0630	546	9	5/8	18	10	4	6 7/8	10	4 1/2	6 7/8	8	4	6 7/8	11/16" x 7/8"	14	1597	409	1620	415
21'-5"	1.75	CP0630	546	9	5/8	18	10	4	6 7/8	10	4 1/2	6 7/8	8	4	6 7/8	11/16" x 7/8"	14	1635	429	1653	434
22'-5"	1.875	CP0630	546	9	5/8	18	9	4	6 7/8	9	4 1/2	6 7/8	7	4	6 7/8	11/16" x 7/8"	13	1680	449	1695	453
23'-5"	2	CP0630	546	9	5/8	17	9	4	6 7/8	9	4 1/2	6 7/8	7	4	6 7/8	11/16" x 7/8"	13	1730	468	1741	473
24'-5"	2.125	CP0630	548	9	3/4	18	13	4 3/4	7 1/2	12	5	7 1/2	10	5	7 1/2	13/16" x 1"	18	1787	488	1797	493
25'-5"	2.25	CP0630 & CP0647	548	9	3/4	18	12	4 3/4	7 1/2	11	5	7 1/2	10	5	7 1/2	13/16" x 1"	18	1841	508	1849	512

NOTES:
1. N/R - not required
2. * - non - windlock guide assembly
3. N/A - not available

Clopay
CLOPAY CORPORATION
8585 DUKE BOULEVARD
MASON, OH 45040

TITLE
TDI WINDLOAD CONFIGURATIONS, INSULATED ROLLING DOOR

SIZE	DRAWN	DWG NO	REV
D	R. MAGGIO	16-43 TDI TD	*

SCALE 1:1 SHEET 15 OF 16

L'TR	REVISION	DATE	BY	E.C.O.
*	ORIGINAL ISSUE	10/06/2010	R.M.	*

TABLE 21

22/22 GA. GALVANIZED OR STAINLESS STEEL - 50 P.S.F. NON-IMPACT RATED

Distance Between Guides (D.B.G.) thru: (FT.- IN.)	Windlock Flat Location on Inner Angle (IN.)	Windlock	Guide Assembly Type	Windlock Flat Weld Pitch Spacing (IN.)	Fastener Diameter (IN.)	Assembly Fastener SAE Gr. 8 Maximum O.C. Spacing (IN.)	Wall Fasteners - Concrete Structure Min 3,000 PSI									Wall fasteners - Steel Structure Min 1/4" fillet weld entire slot perimeter or Gr. 8 bolt		Superimposed Loads POSITIVE (+)		Superimposed Loads NEGATIVE (-)	
							Hilti Kwik Bolt 3			Simpson Wedge-All			Powers Wedge-Bolt								
							Maximum O.C. Spacing (IN.)	Minimum Embedment (IN.)	Minimum Edge Distance (IN.)	Maximum O.C. Spacing (IN.)	Minimum Embedment (IN.)	Minimum Edge Distance (IN.)	Maximum O.C. Spacing (IN.)	Minimum Embedment (IN.)	Minimum Edge Distance (IN.)	Slot	Maximum O.C. Spacing (IN.)	Vx (LBS.)	Vy (LBS.)	Vx (LBS.)	Vy (LBS.)
2'-5"	N/R	N/R	344*	N/R	3/8	24	24	2 1/2	5 3/4	24	2 9/16	5 3/4	24	2 1/2	5 3/4	9/16" x 3/4"	24	0	62	0	58
3'-5"	N/R	N/R	344*	N/R	3/8	24	24	2 1/2	5 3/4	24	2 9/16	5 3/4	24	2 1/2	5 3/4	9/16" x 3/4"	24	0	87	0	83
4'-5"	N/R	N/R	344*	N/R	3/8	24	24	2 1/2	5 3/4	18	2 9/16	5 3/4	22	2 1/2	5 3/4	9/16" x 3/4"	24	0	112	0	108
5'-5"	N/R	N/R	344*	N/R	3/8	24	20	2 1/2	5 3/4	15	2 9/16	5 3/4	18	2 1/2	5 3/4	9/16" x 3/4"	24	0	137	0	133
6'-5"	N/R	N/R	344*	N/R	3/8	24	17	2 1/2	5 3/4	13	2 9/16	5 3/4	15	2 1/2	5 3/4	9/16" x 3/4"	24	0	162	0	158
7'-5"	N/R	N/R	344*	N/R	3/8	24	15	2 1/2	5 3/4	11	2 9/16	5 3/4	13	2 1/2	5 3/4	9/16" x 3/4"	24	0	187	0	183
8'-5"	N/R	N/R	344*	N/R	3/8	24	13	2 1/2	5 3/4	9	2 9/16	5 3/4	11	2 1/2	5 3/4	9/16" x 3/4"	24	0	212	0	208
9'-5"	N/R	N/R	344*	N/R	3/8	24	12	2 1/2	5 3/4	8	2 9/16	5 3/4	10	2 1/2	5 3/4	9/16" x 3/4"	24	0	237	0	233
10'-5"	N/R	N/R	344*	N/R	3/8	24	10	2 1/2	5 3/4	8	2 9/16	5 3/4	9	2 1/2	5 3/4	9/16" x 3/4"	24	0	262	0	258
11'-5"	1.5	CP0629	344	12	3/8	15	11	2 1/2	5 3/4	9	2 9/16	5 3/4	8	2 1/2	5 3/4	9/16" x 3/4"	18	537	287	615	292
12'-5"	1.5	CP0629	445	12	1/2	18	11	3 1/2	6 13/16	12	4 1/2	6 13/16	8	3 1/2	6 13/16	9/16" x 3/4"	18	911	312	1034	321
13'-5"	1.5	CP0630	446	10	5/8	18	12	4	6 7/8	13	4 1/2	6 7/8	10	4	6 7/8	11/16" x 7/8"	18	1243	338	1339	346
14'-5"	1.5	CP0630	546	9	5/8	18	10	4	6 7/8	11	4 1/2	6 7/8	8	4	6 7/8	11/16" x 7/8"	15	1522	363	1602	372
15'-5"	1.5	CP0630 & CP0647	546	9	5/8	18	9	4	6 7/8	9	4 1/2	6 7/8	7	4	6 7/8	11/16" x 7/8"	13	1765	388	1833	397
16'-5"	1.5	CP0630 & CP0647	548	8	3/4	18	12	4 3/4	7 1/2	11	5	7 1/2	10	5	7 1/2	13/16" x 1"	18	1983	414	2045	423
17'-5"	1.5	CP0630 & CP0647	548	8	3/4	18	11	4 3/4	7 1/2	10	5	7 1/2	9	5	7 1/2	13/16" x 1"	17	2176	439	2230	449
18'-5"	1.5	CP0630 & CP0647	548	8	3/4	18	9	4 3/4	7 1/2	9	5	7 1/2	N/A	N/A	N/A	13/16" x 1"	16	2355	465	2402	474
19'-5"	1.5	CP0630 & CP0647	648	7	3/4	18	8	4 3/4	7 1/2	9	5	7 1/2	N/A	N/A	N/A	13/16" x 1"	15	2519	490	2561	499
20'-5"	1.5	CP0630 & CP0647	648	7	3/4	18	7	4 3/4	7 1/2	8	5	7 1/2	N/A	N/A	N/A	13/16" x 1"	14	2682	515	2719	524
21'-5"	1.5	CP0630 & CP0647	648	7	3/4	17	6	4 3/4	7 1/2	8	5	7 1/2	N/A	N/A	N/A	13/16" x 1"	13	2845	540	2879	549
22'-5"	1.5	CP0630 & CP0647	648	7	3/4	16	5	4 3/4	7 1/2	7	5	7 1/2	N/A	N/A	N/A	13/16" x 1"	12	3018	566	3049	574
23'-5"	1.5	CP0630 & CP0647	648	6	3/4	15	5	4 3/4	7 1/2	7	5	7 1/2	N/A	N/A	N/A	13/16" x 1"	12	3245	591	3275	600

TABLE 22

22/22 GA. GALVANIZED OR STAINLESS STEEL - 60 P.S.F. NON-IMPACT RATED

Distance Between Guides (D.B.G.) thru: (FT.- IN.)	Windlock Flat Location on Inner Angle (IN.)	Windlock	Guide Assembly Type	Windlock Flat Weld Pitch Spacing (IN.)	Fastener Diameter (IN.)	Assembly Fastener SAE Gr. 8 Maximum O.C. Spacing (IN.)	Wall Fasteners - Concrete Structure Min 3,000 PSI									Wall fasteners - Steel Structure Min 1/4" fillet weld entire slot perimeter or Gr. 8 bolt		Superimposed Loads POSITIVE (+)		Superimposed Loads NEGATIVE (-)	
							Hilti Kwik Bolt 3			Simpson Wedge-All			Powers Wedge-Bolt								
							Maximum O.C. Spacing (IN.)	Minimum Embedment (IN.)	Minimum Edge Distance (IN.)	Maximum O.C. Spacing (IN.)	Minimum Embedment (IN.)	Minimum Edge Distance (IN.)	Maximum O.C. Spacing (IN.)	Minimum Embedment (IN.)	Minimum Edge Distance (IN.)	Slot	Maximum O.C. Spacing (IN.)	Vx (LBS.)	Vy (LBS.)	Vx (LBS.)	Vy (LBS.)
2'-5"	N/R	N/R	344*	N/R	3/8	24	24	2 1/2	5 3/4	24	2 9/16	5 3/4	24	2 1/2	5 3/4	9/16" x 3/4"	24	0	74	0	70
3'-5"	N/R	N/R	344*	N/R	3/8	24	24	2 1/2	5 3/4	20	2 9/16	5 3/4	23	2 1/2	5 3/4	9/16" x 3/4"	24	0	104	0	100
4'-5"	N/R	N/R	344*	N/R	3/8	24	20	2 1/2	5 3/4	15	2 9/16	5 3/4	18	2 1/2	5 3/4	9/16" x 3/4"	24	0	134	0	130
5'-5"	N/R	N/R	344*	N/R	3/8	24	17	2 1/2	5 3/4	12	2 9/16	5 3/4	15	2 1/2	5 3/4	9/16" x 3/4"	24	0	164	0	160
6'-5"	N/R	N/R	344*	N/R	3/8	24	14	2 1/2	5 3/4	10	2 9/16	5 3/4	12	2 1/2	5 3/4	9/16" x 3/4"	24	0	194	0	190
7'-5"	N/R	N/R	344*	N/R	3/8	24	12	2 1/2	5 3/4	9	2 9/16	5 3/4	11	2 1/2	5 3/4	9/16" x 3/4"	24	0	224	0	220
8'-5"	N/R	N/R	344*	N/R	3/8	24	11	2 1/2	5 3/4	8	2 9/16	5 3/4	9	2 1/2	5 3/4	9/16" x 3/4"	24	0	254	0	250
9'-5"	N/R	N/R	344*	N/R	3/8	24	10	2 1/2	5 3/4	7	2 9/16	5 3/4	8	2 1/2	5 3/4	9/16" x 3/4"	24	0	284	0	280
10'-5"	1.5	CP0629	445	12	1/2	18	12	3 1/2	6 13/16	13	4 1/2	6 13/16	9	3 1/2	6 13/16	9/16" x 3/4"	18	710	314	920	325
11'-5"	1.5	CP0630	446	10	5/8	18	11	4	6 7/8	11	4 1/2	6 7/8	9	4	6 7/8	11/16" x 7/8"	16	1343	346	1505	356
12'-5"	1.5	CP0630 & CP0647	548	8	3/4	18	12	4 3/4	7 1/2	11	5	7 1/2	9	5	7 1/2	13/16" x 1"	18	1939	378	2083	390
13'-5"	1.5	CP0630 & CP0647	648	7	3/4	18	7	4 3/4	7 1/2	9	5	7 1/2	N/A	N/A	N/A	13/16" x 1"	14	2673	411	2799	423

NOTES:
1. N/R - not required
2. * - non - windlock guide assembly
3. N/A - not available

Clopay

CLOPAY CORPORATION
8585 DUKE BOULEVARD
MASON, OH 45040

TITLE
TDI WINDLOAD CONFIGURATIONS,
INSULATED ROLLING DOOR

SIZE	DRAWN	DWG NO	REV
D	R. MAGGIO	16-43 TDI TD	*

SCALE 1:1 SHEET 16 OF 16