L'TR	REVISION	DATE	BY	E.C.O.
*	ORIGINAL ISSUE	10/08/2010	R.M.	*

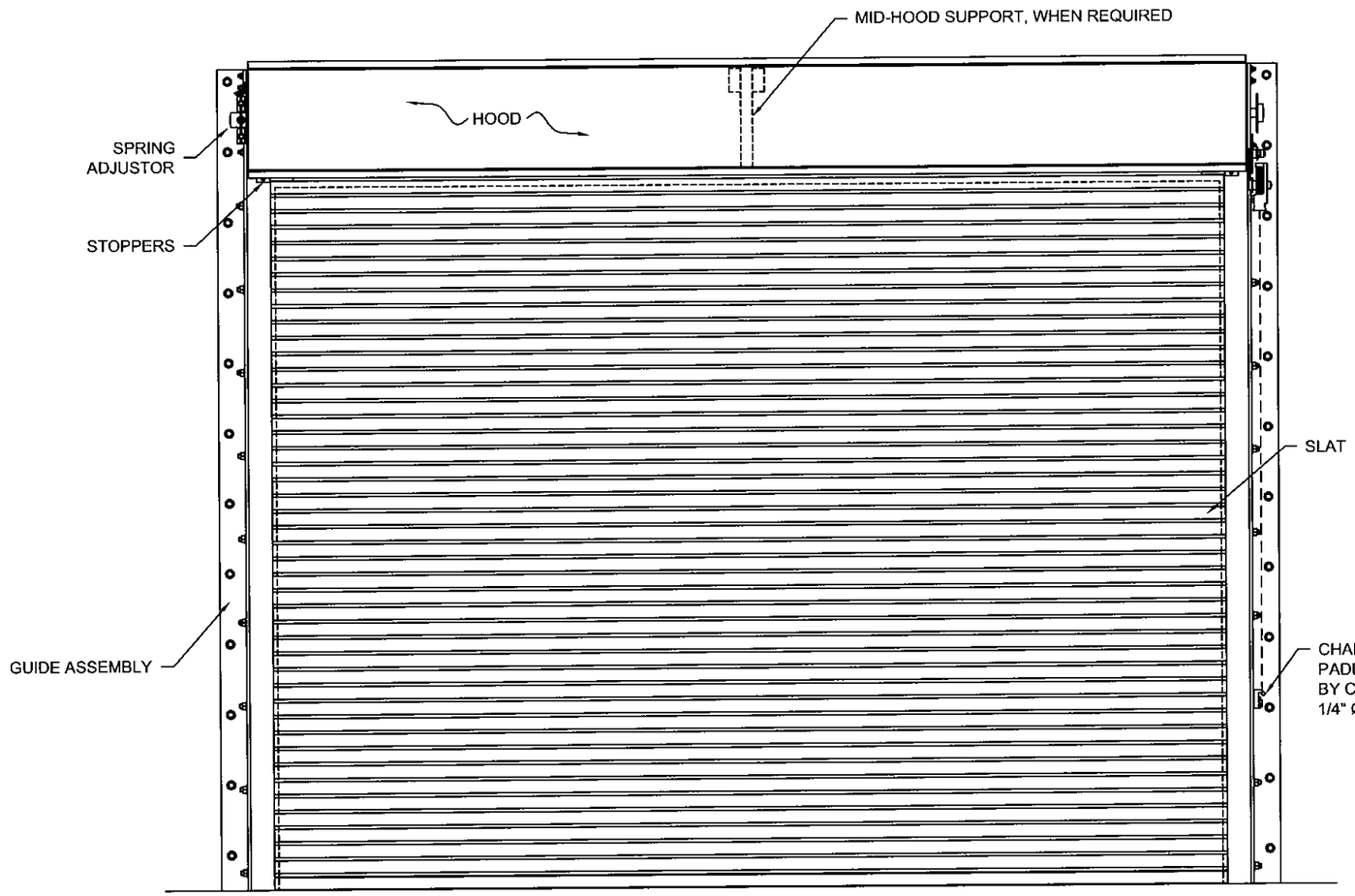

(A) ROLL-UP DOOR FRONT ELEVATION
N.T.S.

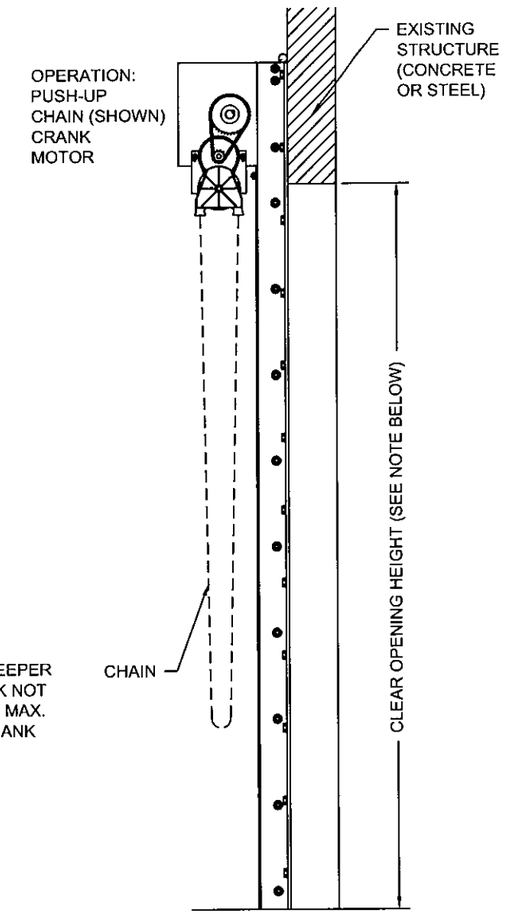

NOTE: WIND LOADS SPECIFIED IN TABLES 1 THRU 12 ARE ACCEPTABLE FOR ANY C.O.H.. FOR GREATER THAN 30 FT, C.O.H., MOUNTING CONDITIONS SHALL BE DETERMINED ON A SITE SPECIFIC BASIS.

(B) ROLL-UP DOOR SIDE ELEVATION
N.T.S.

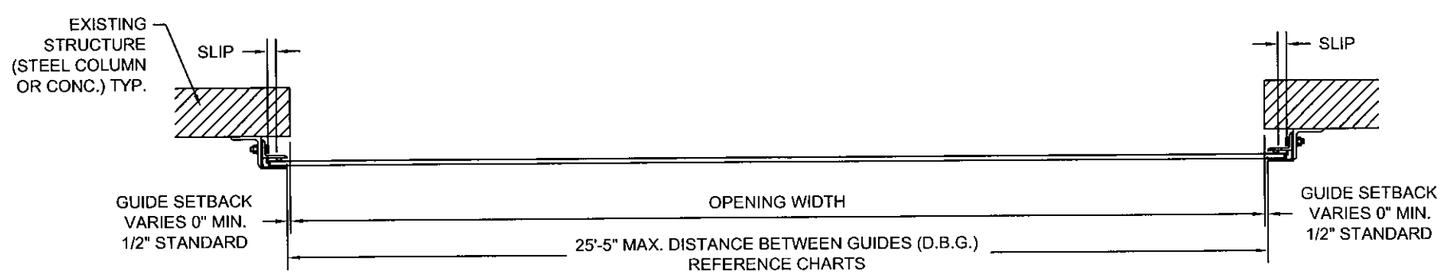

(C) ROLL-UP DOOR PLAN VIEW
N.T.S.

Clopay

CLOPAY CORPORATION
8585 DUKE BOULEVARD
MASON, OH 45040

TITLE
WINDLOAD CONFIGURATIONS
NON-INSULATED ROLLING DOOR
CP0020 SLAT

SIZE	DRAWN	DWG NO	REV
C	R. MAGGIO	16-43 SD	*

SCALE AS NOTED SHEET 1 OF 7

L'TR	REVISION	DATE	BY	E.C.O.
*	ORIGINAL ISSUE	10/08/2010	R.M.	*

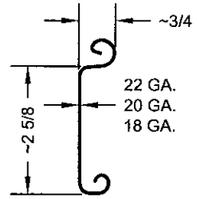

MATERIAL:
ASTM A653 HSLAS TYPE B GRADE 40 GALVANIZED
OR ASTM A653 HSLAS TYPE A GRADE 40 GALVANIZED
OR ASTM A653 STRUCTURAL STEEL GRADE 40 GALVANIZED
OR TYPE 304 STAINLESS STEEL (MIN. YIELD - 40,000 psi)
OR TYPE 430 STAINLESS STEEL (MIN. YIELD - 40,000 psi)
OR TYPE 201 STAINLESS STEEL (MIN. YIELD - 40,000 psi)

1 **CP0020 SLAT TYPICAL SECTION**

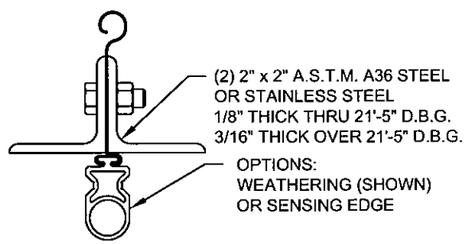

2 **BOTTOM BAR TYPICAL SECTION**

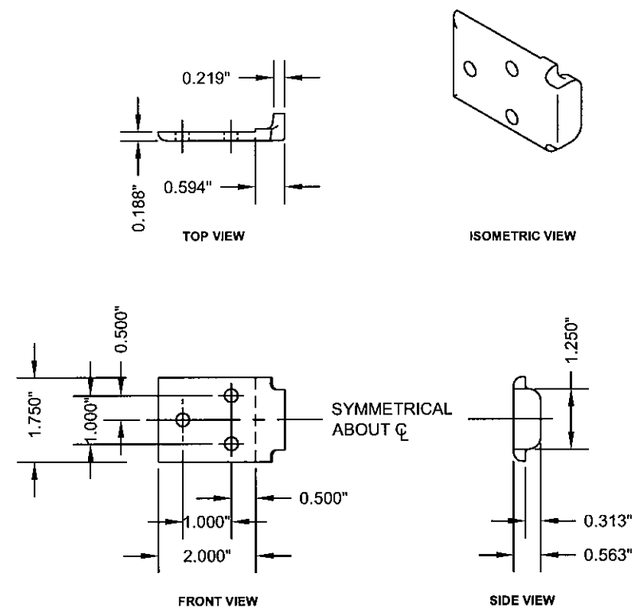

NOTE:

1. TO BE USED IN CONJUNCTION WITH HEAVY ALTERNATE CAST ENDLOCK / WINDLOCK CP0628 WHEN REQUIRED.

3 **HEAVY CAST IRON WINDLOCK CP0646**

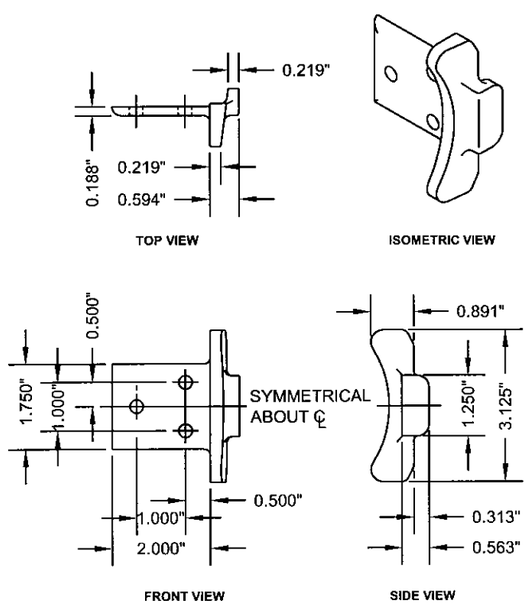

4 **HEAVY ALT. CAST IRON ENDLOCK / WINDLOCK CP0628**

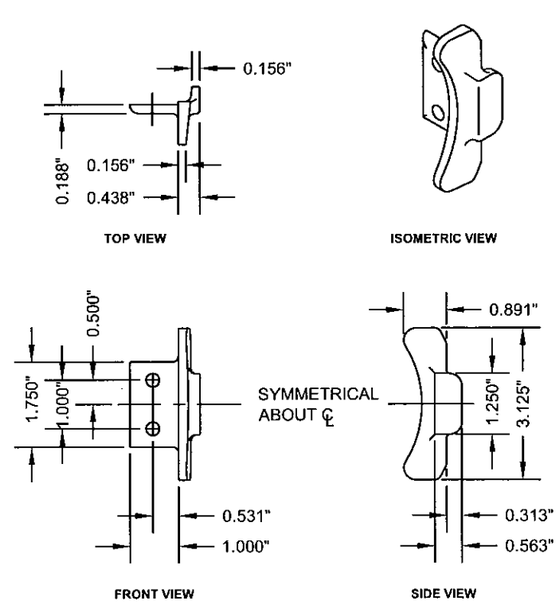

5 **LIGHT ALT. CAST IRON ENDLOCK / WINDLOCK CP0627**

GENERAL NOTES:

1. THESE PRODUCT EVALUATION DOCUMENTS REPRESENT A ROLL-UP DOOR ASSEMBLY DESIGNED AND TESTED IN ACCORDANCE WITH THE STANDARD BUILDING CODE, THE INTERNATIONAL BUILDING CODE, AND THE FLORIDA BUILDING CODE.
2. THIS ROLL-UP DOOR HAS BEEN TESTED FOR UNIFORM STATIC PRESSURE, IMPACT AND FATIGUE RESISTANCE IN ACCORDANCE WITH THE FBC TEST PROTOCOLS FOR HIGH VELOCITY HURRICANE ZONES TAS 201, TAS 202, AND TAS 203.
3. A 33% INCREASE IN ALLOWABLE STRESS HAS NOT BEEN USED IN THE DESIGN OF THIS PRODUCT.
4. DETERMINE THE POSITIVE AND NEGATIVE DESIGN LOADS TO USE WHEN REFERENCING THESE DOCUMENTS IN ACCORDANCE WITH THE GOVERNING CODE AND GOVERNING WIND VELOCITY.
5. THESE PRODUCT EVALUATION DOCUMENTS ARE PREPARED BY THE PRODUCT ENGINEER AND ARE GENERIC. THEY DO NOT INCLUDE INFORMATION PREPARED FOR A SPECIFIC SITE.
6. THESE PRODUCT EVALUATION DOCUMENTS ARE NOT VALID FOR PERMIT WITHOUT ORIGINAL SIGNATURE, DATE AND EMBOSSED SEAL ON EACH PERMIT COPY, WHETHER OR NOT A MASTER APPROVAL DOCUMENT IS ON FILE WITH A MUNICIPALITY OR OTHER GOVERNING AGENCY.
7. THESE PRODUCT EVALUATION DOCUMENTS ARE SUITABLE TO BE APPLIED BY THE CONTRACTOR PROVIDED THE CONTRACTOR DOES NOT DEVIATE FROM THE CONDITIONS DETAILED HEREIN AND THE CONTRACTOR VERIFIES THE EXISTING STRUCTURE IS CAPABLE OF SUPPORTING THE SUPERIMPOSED LOADS Vx & Vy ON THE JAMBS OF THE DOOR.
8. ALTERATIONS OR ADDITIONS TO THIS DOCUMENT ARE NOT PERMITTED.
9. WHEN THE SITE CONDITIONS DEVIATE FROM THESE PRODUCT EVALUATION DOCUMENTS, SITE SPECIFIC DOCUMENTS SHALL BE PREPARED BY A DULY LICENSED AND REGISTERED ENGINEER OR ARCHITECT.
10. IF THE DEVIATING SITE SPECIFIC DOCUMENTS ARE PREPARED BY A DELEGATED REGISTERED ENGINEER OR ARCHITECT, SAID DOCUMENTS SHALL BEAR THE DATE, SIGNATURE, AND EMBOSSED SEAL OF THE DELEGATED ENGINEER OR ARCHITECT AND SHALL BE SUBMITTED TO THE PROJECT ENGINEER FOR REVIEW.
11. ALL BOLTS AND WASHERS SHALL BE GALVANIZED STEEL OR STAINLESS STEEL WITH A MINIMUM TENSILE STRENGTH OF 60 K.S.I.
12. ALL WINDLOCK RIVETS SHALL BE 1/4" STEEL RIVETS IFI GRADE 30 WITH A MINIMUM TENSILE STRENGTH OF 1,850 Lbs., AND SHEAR STRENGTH OF 2,400 Lbs., U.O.N.. RIVETS TO BE INSTALLED IN ALL WINDLOCK HOLES.
13. ENDLOCKS/WINDLOCKS SHALL BE CAST MALLEABLE IRON TYPE 32510 PER ASTM A47 OR CAST DUCTILE IRON PER ASTM A536 GRADE 65-45-12.
14. ALL WELDING SHALL BE PERFORMED BY QUALIFIED WELDERS IN ACCORDANCE WITH A.W.S. SPECIFICATIONS, LATEST EDITION. ALL WELDING ELECTRODES SHALL CONFORM TO A.W.S. A5.1 GRADE E-70. MINIMUM WELDING PROCESSES SHALL BE ARC WELDING A.W.S. E7014 OR MIG WELDING A.W.S. ER70S-6.
15. ANCHOR NOTES:
    A. EMBEDMENT LENGTH DOES NOT INCLUDE STUCCO FINISH.
    B. ANCHORS SHALL BE INSTALLED IN ACCORDANCE WITH MANUFACTURERS SPECIFICATIONS.
    C. ANCHOR CAPACITY FOR THIS ROLL-UP DOOR IS BASED ON MIN. 3,000 P.S.I. CONCRETE EXCEPT WHERE NOTED..
    D. FOR MINIMUM EMBEDMENT AND MINIMUM EDGE DISTANCE, REFER TO TABLES 1 THRU 12.
16. DOOR MAY BE INSTALLED ON THE INSIDE OR OUTSIDE OF AN EXTERIOR WALL
17. DOORS WILL BE MANUFACTURED BY CORNELL IRON WORKS FOR THE CLOPAY CORPORATION.

Clopay
CLOPAY CORPORATION
8585 DUKE BOULEVARD
MASON, OH 45040

TITLE
WINDLOAD CONFIGURATIONS
NON-INSULATED ROLLING DOOR
CP0020 SLAT

SIZE	DRAWN	DWG NO	REV
C	R. MAGGIO	16-43 SD	*

SCALE 1:2 SHEET 2 OF 7

L'TR	REVISION	DATE	BY	E.C.O.
*	ORIGINAL ISSUE	10/08/2010	R.M.	*

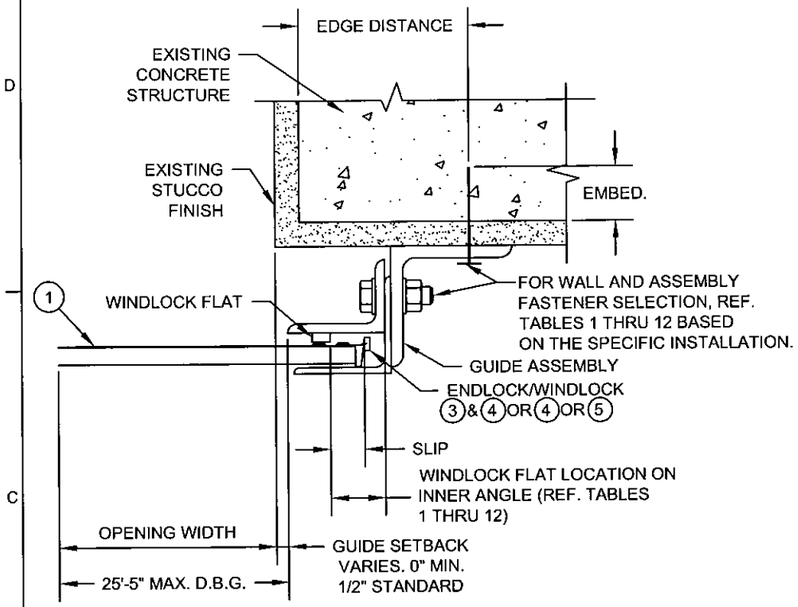

D CONCRETE STRUCTURE ASSEMBLY (ZEE GUIDE)
SCALE: 3" = 1'-0"

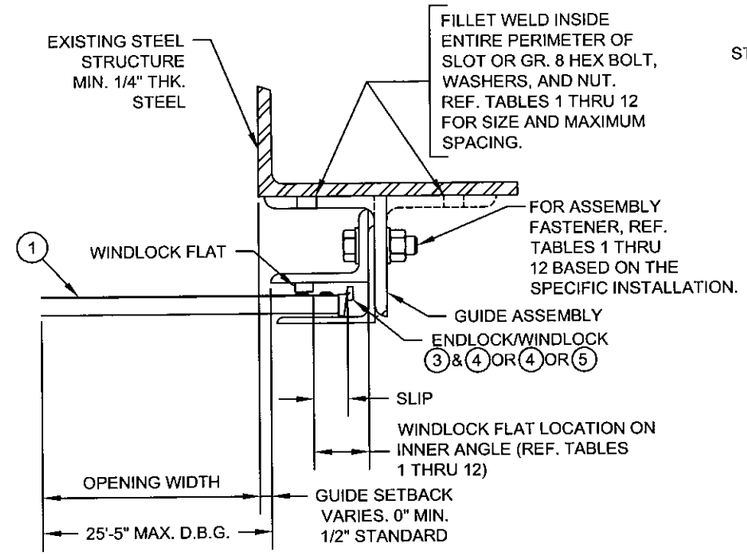

E STEEL STRUCTURE ASSEMBLY (BOX OR ZEE GUIDE)
SCALE: 3" = 1'-0"

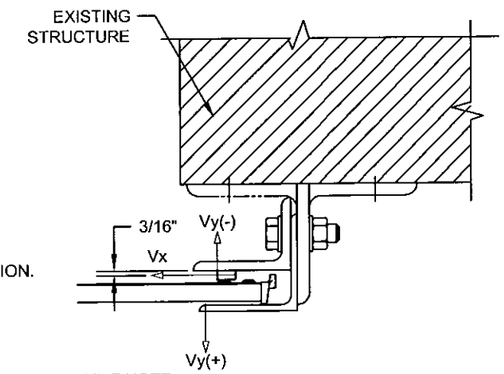

DETAIL F NOTE:

1. Vx & Vy ARE HORIZ. AND VERT. COMPONENTS OF THE REACTION, RESPECTIVELY, RESULTING FROM WIND LOADS ON THE ROLL-UP DOOR. THE EXISTING STRUCTURE SHALL BE CAPABLE OF RESISTING Vx & Vy FORCES SHOWN AND THE CORRESPONDING REACTIONS DUE TO THE ECCENTRICITIES OF THE FORCES.

F SUPERIMPOSED LOAD DIAGRAM
SCALE: 3" = 1'-0"

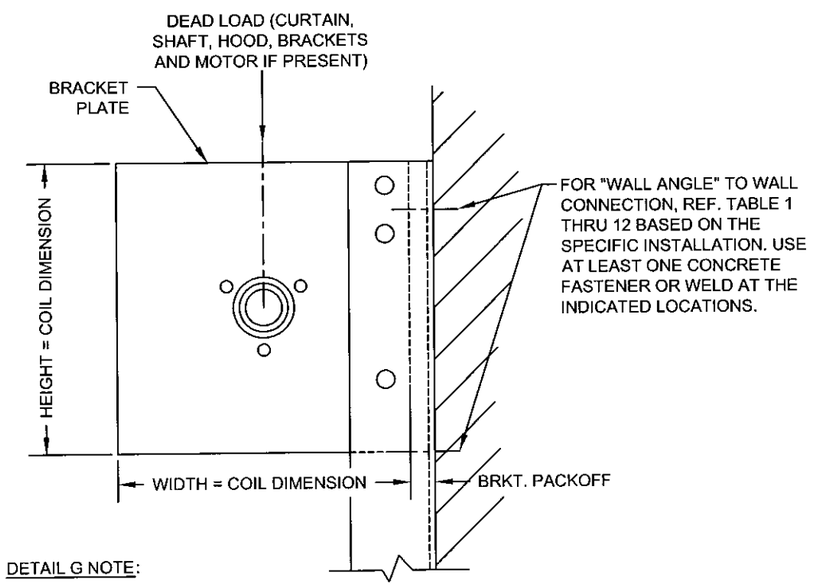

DETAIL G NOTE:

1. WHEN MOTOR IS PROVIDED, HEIGHT OR WIDTH DIMENSION MAY INCREASE UP TO 2-1/2" BASED ON MOTOR LOCATION. WHEN AN 8" DIAMETER OR LARGER SHAFT ASSEMBLY IS PROVIDED, HEIGHT DIMENSION INCREASES BY 2".

G CONCRETE STRUCTURE ASSEMBLY (ZEE GUIDE)
N.T.S.

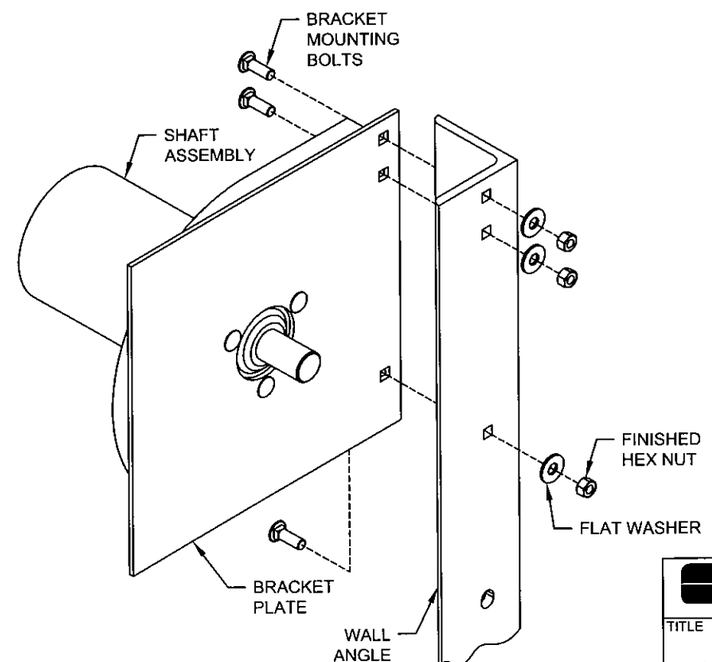

Clopay
CLOPAY CORPORATION
8585 DUKE BOULEVARD
MASON, OH 45040

TITLE
WINDLOAD CONFIGURATIONS
NON-INSULATED ROLLING DOOR
CP0020 SLAT

SIZE	DRAWN	DWG NO	REV
C	R. MAGGIO	16-43 SD	*
SCALE AS NOTED		SHEET 3 OF 7	

L'TR	REVISION	DATE	BY	E.C.O.
*	ORIGINAL ISSUE	10/08/2010	R.M.	*

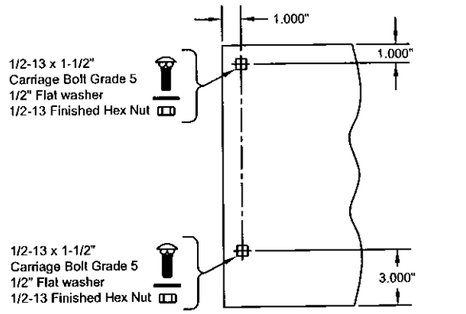

THRU 6"ø SHAFT ASSEMBLY
14" THRU 16" COIL DIMENSION
MIN. THICKNESS 0.172" ASTM A36
(J) SCALE: 1-1/2" = 1'-0"

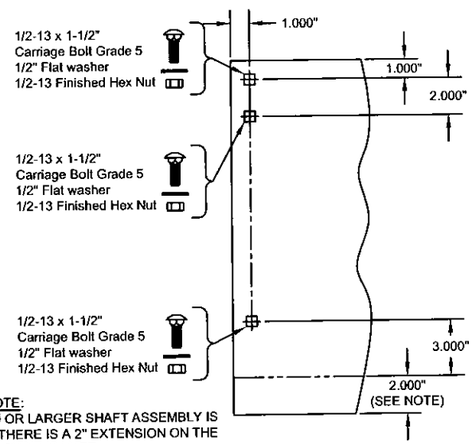

DETAIL K NOTE:
WHEN A 8"Ø OR LARGER SHAFT ASSEMBLY IS PROVIDED, THERE IS A 2" EXTENSION ON THE BOTTOM OF THE BRACKET.

THRU 10"ø SHAFT ASSEMBLY
17" AND LARGER COIL DIMENSION
MIN. THICKNESS 0.240" ASTM A36
(K) SCALE: 1-1/2" = 1'-0"

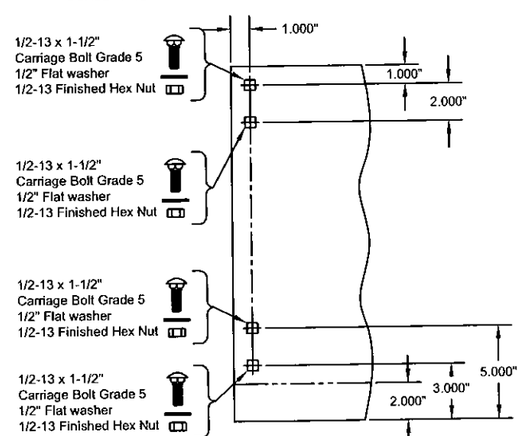

12"ø SHAFT ASSEMBLY
17" AND LARGER COIL DIMENSION
MIN. THICKNESS 0.240" ASTM A36
(L) SCALE: 1-1/2" = 1'-0"

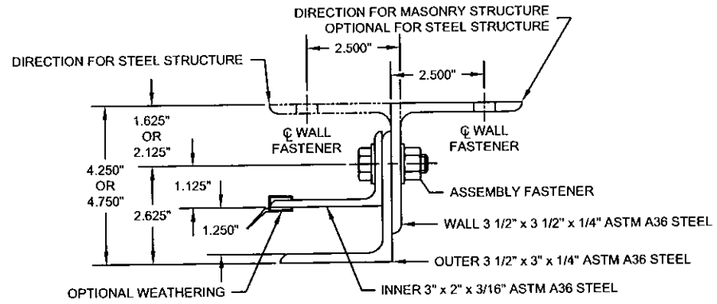

(M) **GUIDE ASSEMBLY TYPE 344* (NON-WINDLOCK)**
SCALE: 3" = 1'-0"

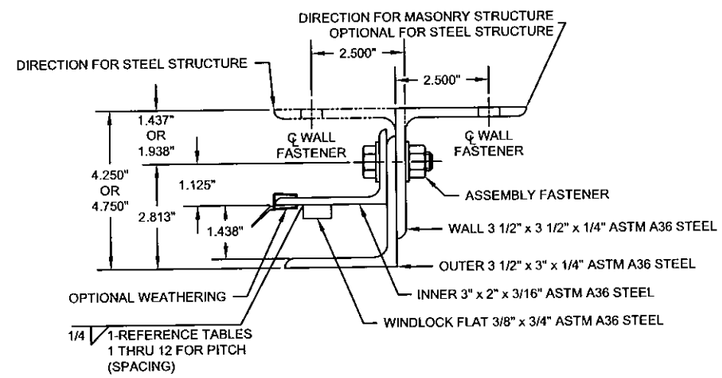

(N) **GUIDE ASSEMBLY TYPE 344**
SCALE: 3" = 1'-0"

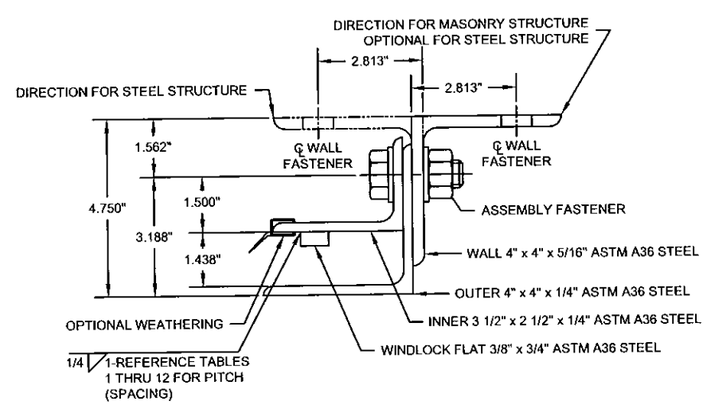

(P) **GUIDE ASSEMBLY TYPE 445**
SCALE: 3" = 1'-0"

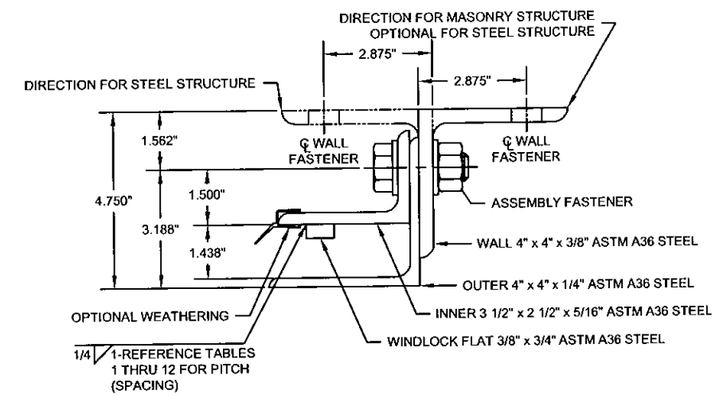

(Q) **GUIDE ASSEMBLY TYPE 546**
SCALE: 3" = 1'-0"

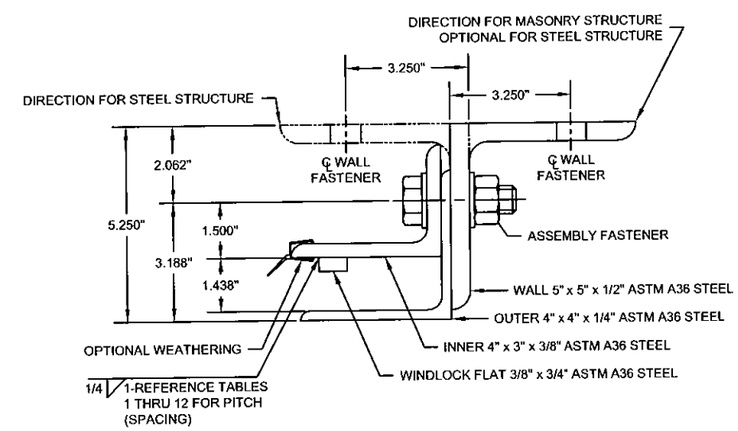

(R) **GUIDE ASSEMBLY TYPE 648**
SCALE: 3" = 1'-0"

Clopay
CLOPAY CORPORATION
8585 DUKE BOULEVARD
MASON, OH 45040

TITLE
WINDLOAD CONFIGURATIONS
NON-INSULATED ROLLING DOOR
CP0020 SLAT

SIZE	DRAWN	DWG NO	REV
D	R. MAGGIO	16-43 SD	*
SCALE AS NOTED		SHEET 4 OF 7	

L'TR	REVISION	DATE	BY	E.C.O.
*	ORIGINAL ISSUE	10/08/2010	R.M.	*

TABLE 1 — CP0020 - 22 GA. GALVANIZED OR STAINLESS STEEL - 30 P.S.F.

DISTANCE BETWEEN GUIDES (D.B.G.) THRU: (FT.-IN.)	WINDLOCK FLAT LOCATION ON INNER ANGLE (IN.)	SLIP (IN.)	WINDLOCK	GUIDE ASSEMBLY TYPE	WINDLOCK FLAT WELD PITCH SPACING (IN.)	FASTENER DIAMETER (IN.)	ASSEMBLY FASTENER SAE GRADE 8 MAXIMUM O.C. SPACING (IN.)	CONCRETE STRUCTURE MINIMUM 3,000 P.S.I. HILTI KWIK BOLT 3			CONCRETE STRUCTURE MINIMUM 3,000 P.S.I. POWERS WEDGE-BOLT			CONCRETE STRUCTURE MINIMUM 3,000 P.S.I. SIMPSON WEDGE ALL			STEEL STRUCTURE MINIMUM 1/4" FILLET WELD ENTIRE PERIMETER OF SLOT OR GR. 8 THRU BOLT		SUPERIMPOSED LOADS POSITIVE (+)		SUPERIMPOSED LOADS NEGATIVE (-)	
								MAX. O.C. SPACING (IN.)	MIN. EMBED. (IN.)	MIN. EDGE DISTANCE (IN.)	MAX. O.C. SPACING (IN.)	MIN. EMBED. (IN.)	MIN. EDGE DISTANCE (IN.)	MAX. O.C. SPACING (IN.)	MIN. EMBED. (IN.)	MIN. EDGE DISTANCE (IN.)	MAX. O.C. SPACING (IN.)	SLOT SIZE (IN.)	Vx (LBS.)	Vy (LBS.)	Vx (LBS.)	Vy (LBS.)
6'-5"	N/R	N/R	N/R	344*	N/R	3/8	24	24	2 1/2	5 3/4	24	2 1/2	5 3/4	22	2 9/16	5 3/4	24	9/16 x 3/4	0	97	0	95
16'-5"	1 1/2	0.656	CP0627	344	12	1/2	18	11	3 1/2	5 3/4	12	3 1/2	5 3/4	11	4 1/2	5 3/4	18	9/16 x 3/4	962	247	966	249
21'-5"	2	1.2	CP0627	445	10	5/8	18	14	4	6 13/16	15	4	6 13/16	15	4 1/2	6 13/16	18	11/16 x 7/8	1221	321	1227	324
22'-5"	2	1.2	CP0628	445	10	5/8	18	13	4	6 13/16	12	4	6 13/16	14	4 1/2	6 13/16	18	11/16 x 7/8	1369	336	1375	340
25'-5"	2	1.2	CP0628	546	8	5/8	18	10	4	6 7/8	10	4	6 7/8	11	4 1/2	6 7/8	15	11/16 x 7/8	1704	382	1709	386

TABLE 2 — CP0020 - 22 GA. GALVANIZED OR STAINLESS STEEL - 40 P.S.F.

DISTANCE BETWEEN GUIDES (D.B.G.) THRU: (FT.-IN.)	WINDLOCK FLAT LOCATION ON INNER ANGLE (IN.)	SLIP (IN.)	WINDLOCK	GUIDE ASSEMBLY TYPE	WINDLOCK FLAT WELD PITCH SPACING (IN.)	FASTENER DIAMETER (IN.)	ASSEMBLY FASTENER SAE GRADE 8 MAXIMUM O.C. SPACING (IN.)	CONCRETE STRUCTURE MINIMUM 3,000 P.S.I. HILTI KWIK BOLT 3			CONCRETE STRUCTURE MINIMUM 3,000 P.S.I. POWERS WEDGE-BOLT			CONCRETE STRUCTURE MINIMUM 3,000 P.S.I. SIMPSON WEDGE ALL			STEEL STRUCTURE MINIMUM 1/4" FILLET WELD ENTIRE PERIMETER OF SLOT OR GR. 8 THRU BOLT		SUPERIMPOSED LOADS POSITIVE (+)		SUPERIMPOSED LOADS NEGATIVE (-)	
								MAX. O.C. SPACING (IN.)	MIN. EMBED. (IN.)	MIN. EDGE DISTANCE (IN.)	MAX. O.C. SPACING (IN.)	MIN. EMBED. (IN.)	MIN. EDGE DISTANCE (IN.)	MAX. O.C. SPACING (IN.)	MIN. EMBED. (IN.)	MIN. EDGE DISTANCE (IN.)	MAX. O.C. SPACING (IN.)	SLOT SIZE (IN.)	Vx (LBS.)	Vy (LBS.)	Vx (LBS.)	Vy (LBS.)
5'-5"	N/R	N/R	N/R	344*	N/R	3/8	24	24	2 1/2	5 3/4	24	2 1/2	5 3/4	19	2 9/16	5 3/4	24	9/16 x 3/4	0	110	0	107
14'-5"	1 1/2	0.656	CP0628	344	8	1/2	12	6	3 1/2	5 3/4	N/A	N/A	N/A	5 1/2	3 3/8	5 3/4	12 (SEE NOTE 4)	9/16 x 3/4	1075	290	1081	293
18'-5"	2	1.2	CP0627	445	10	5/8	18	13	4	6 13/16	12	4	6 13/16	14	4 1/2	6 13/16	18	11/16 x 7/8	1261	367	1269	372
22'-5"	2	1.2	CP0628	546	8	5/8	18	10	4	6 7/8	10	4	6 7/8	10	4 1/2	6 7/8	15	11/16 x 7/8	1866	449	1873	454
25'-5"	2 1/2	1.7	CP0628 & CP0646	648	8	3/4	18	12	4 3/4	7 1/2	12	5	7 1/2	12	5	7 1/2	18	13/16 x 1	1901	508	1904	511

TABLE 3 — CP0020 - 22 GA. GALVANIZED OR STAINLESS STEEL - 50 P.S.F.

DISTANCE BETWEEN GUIDES (D.B.G.) THRU: (FT.-IN.)	WINDLOCK FLAT LOCATION ON INNER ANGLE (IN.)	SLIP (IN.)	WINDLOCK	GUIDE ASSEMBLY TYPE	WINDLOCK FLAT WELD PITCH SPACING (IN.)	FASTENER DIAMETER (IN.)	ASSEMBLY FASTENER SAE GRADE 8 MAXIMUM O.C. SPACING (IN.)	CONCRETE STRUCTURE MINIMUM 3,000 P.S.I. HILTI KWIK BOLT 3			CONCRETE STRUCTURE MINIMUM 3,000 P.S.I. POWERS WEDGE-BOLT			CONCRETE STRUCTURE MINIMUM 3,000 P.S.I. SIMPSON WEDGE ALL			STEEL STRUCTURE MINIMUM 1/4" FILLET WELD ENTIRE PERIMETER OF SLOT OR GR. 8 THRU BOLT		SUPERIMPOSED LOADS POSITIVE (+)		SUPERIMPOSED LOADS NEGATIVE (-)	
								MAX. O.C. SPACING (IN.)	MIN. EMBED. (IN.)	MIN. EDGE DISTANCE (IN.)	MAX. O.C. SPACING (IN.)	MIN. EMBED. (IN.)	MIN. EDGE DISTANCE (IN.)	MAX. O.C. SPACING (IN.)	MIN. EMBED. (IN.)	MIN. EDGE DISTANCE (IN.)	MAX. O.C. SPACING (IN.)	SLOT SIZE (IN.)	Vx (LBS.)	Vy (LBS.)	Vx (LBS.)	Vy (LBS.)
4'-5"	N/R	N/R	N/R	344*	N/R	3/8	24	24	2 1/2	5 3/4	24	2 1/2	5 3/4	19	2 9/16	5 3/4	24	9/16 x 3/4	0	112	0	108
14'-5"	1 1/2	0.656	CP0628	344	8	1/2	12	6	3 1/2	5 3/4	N/A	N/A	N/A	5 1/2	3 3/8	5 3/4	12 (SEE NOTE 4)	9/16 x 3/4	1418	362	1425	367
19'-5"	2	1.2	CP0628	546	8	5/8	18	10	4	6 7/8	10	4	6 7/8	10	4 1/2	6 7/8	15	11/16 x 7/8	1843	486	1852	492
22'-5"	2 1/2	1.7	CP0628	648	8	3/4	18	12	4 3/4	7 1/2	12	5	7 1/2	12	5	7 1/2	18	13/16 x 1	1945	559	1948	563
23'-5"	2 1/2	1.7	CP0628 & CP0646	648	8	3/4	18	11	4 3/4	7 1/2	10	5	7 1/2	11	5	7 1/2	18	13/16 x 1	2095	585	2098	589
25'-5"	2 1/2	1.7	CP0628 & CP0646	648	6	3/4	18	7	4 3/4	7 1/2	10	5	7 1/2	9	5	7 1/2	15	13/16 x 1	2400	635	2403	640

TABLE 4 — CP0020 - 22 GA. GALVANIZED OR STAINLESS STEEL - 60 P.S.F.

DISTANCE BETWEEN GUIDES (D.B.G.) THRU: (FT.-IN.)	WINDLOCK FLAT LOCATION ON INNER ANGLE (IN.)	SLIP (IN.)	WINDLOCK	GUIDE ASSEMBLY TYPE	WINDLOCK FLAT WELD PITCH SPACING (IN.)	FASTENER DIAMETER (IN.)	ASSEMBLY FASTENER SAE GRADE 8 MAXIMUM O.C. SPACING (IN.)	CONCRETE STRUCTURE MINIMUM 3,000 P.S.I. HILTI KWIK BOLT 3			CONCRETE STRUCTURE MINIMUM 3,000 P.S.I. POWERS WEDGE-BOLT			CONCRETE STRUCTURE MINIMUM 3,000 P.S.I. SIMPSON WEDGE ALL			STEEL STRUCTURE MINIMUM 1/4" FILLET WELD ENTIRE PERIMETER OF SLOT OR GR. 8 THRU BOLT		SUPERIMPOSED LOADS POSITIVE (+)		SUPERIMPOSED LOADS NEGATIVE (-)	
								MAX. O.C. SPACING (IN.)	MIN. EMBED. (IN.)	MIN. EDGE DISTANCE (IN.)	MAX. O.C. SPACING (IN.)	MIN. EMBED. (IN.)	MIN. EDGE DISTANCE (IN.)	MAX. O.C. SPACING (IN.)	MIN. EMBED. (IN.)	MIN. EDGE DISTANCE (IN.)	MAX. O.C. SPACING (IN.)	SLOT SIZE (IN.)	Vx (LBS.)	Vy (LBS.)	Vx (LBS.)	Vy (LBS.)
4'-5"	N/R	N/R	N/R	344*	N/R	3/8	24	20	2 1/2	5 3/4	24	2 1/2	5 3/4	16	2 9/16	5 3/4	24	9/16 x 3/4	0	134	0	130
14'-5"	1 1/2	0.656	CP0628	344	8	1/2	12	6	3 1/2	5 3/4	N/A	N/A	N/A	5 1/2	3 3/8	5 3/4	12 (SEE NOTE 4)	9/16 x 3/4	1762	435	1769	440
16'-5"	1 3/4	0.9	CP0628	546	8	5/8	18	9	4	6 7/8	10	4	6 7/8	10	4 1/2	6 7/8	12	11/16 x 7/8	1898	494	1915	502
21'-5"	2 1/2	1.7	CP0628 & CP0646	648	6	3/4	18	11	4 3/4	7 1/2	10	5	7 1/2	10	5	7 1/2	18	13/16 x 1	2183	641	2187	646
23'-5"	2 1/2	1.7	CP0628 & CP0646	648	6	3/4	18	6	4 3/4	7 1/2	9	5	7 1/2	9	5	7 1/2	15	13/16 x 1	2536	702	2540	707

NOTES:
1. N/A - NOT AVAILABLE.
2. * - REPRESENTS NON-WINDLOCK.
3. N/R - NOT REQUIRED.
4. 1 5/8" LONG WELD ALSO REQUIRED AT TOE OF WALL ANGLE AT 12" O.C. (APPLIES TO BOX GUIDE ONLY).

Clopay
CLOPAY CORPORATION
8585 DUKE BOULEVARD
MASON, OH 45040

TITLE
WINDLOAD CONFIGURATIONS
NON-INSULATED ROLLING DOOR
CP0020 SLAT

SIZE	DRAWN	DWG NO	REV
D	R. MAGGIO	16-43 SD	*

SCALE N/A SHEET 5 OF 7

L'TR	REVISION	DATE	BY	E.C.O.
*	ORIGINAL ISSUE	10/08/2010	R.M.	*

TABLE 5 — CP0020 - 20 GA. GALVANIZED OR STAINLESS STEEL - 30 P.S.F.

DISTANCE BETWEEN GUIDES (D.B.G.) THRU: (FT.-IN.)	WINDLOCK FLAT LOCATION ON INNER ANGLE (IN.)	SLIP (IN.)	WINDLOCK	GUIDE ASSEMBLY TYPE	WINDLOCK FLAT WELD PITCH SPACING (IN.)	FASTENER DIAMETER (IN.)	ASSEMBLY FASTENER SAE GRADE 8 MAXIMUM O.C. SPACING (IN.)	CONCRETE STRUCTURE MINIMUM 3,000 P.S.I. HILTI KWIK BOLT 3			CONCRETE STRUCTURE MINIMUM 3,000 P.S.I. POWERS WEDGE-BOLT			CONCRETE STRUCTURE MINIMUM 3,000 P.S.I. SIMPSON WEDGE ALL			STEEL STRUCTURE MINIMUM 1/4" FILLET WELD ENTIRE PERIMETER OF SLOT OR GR. 8 THRU BOLT		SUPERIMPOSED LOADS POSITIVE (+)		SUPERIMPOSED LOADS NEGATIVE (-)	
								MAX. O.C. SPACING (IN.)	MIN. EMBED. (IN.)	MIN. EDGE DISTANCE (IN.)	MAX. O.C. SPACING (IN.)	MIN. EMBED. (IN.)	MIN. EDGE DISTANCE (IN.)	MAX. O.C. SPACING (IN.)	MIN. EMBED. (IN.)	MIN. EDGE DISTANCE (IN.)	MAX. O.C. SPACING (IN.)	SLOT SIZE (IN.)	Vx (LBS.)	Vy (LBS.)	Vx (LBS.)	Vy (LBS.)
7'-5"	N/R	N/R	N/R	344*	N/R	3/8	24	24	2 1/2	5 3/4	24	2 1/2	5 3/4	19	2 9/16	5 3/4	24	9/16 x 3/4	0	112	0	110
14'-5"	1 1/2	0.656	CP0628	344	8	1/2	12	6	3 1/2	5 3/4	N/A	N/A	N/A	5 1/2	3 3/8	5 3/4	12 (SEE NOTE 4)	9/16 x 3/4	578	217	586	219
22'-5"	2	1.2	CP0627	445	10	5/8	18	14	4	6 13/16	12	4	6 13/16	15	4 1/2	6 13/16	18	11/16 x 7/8	1265	336	1272	339
25'-5"	2	1.2	CP0628	546	8	5/8	18	11	4	6 7/8	10	4	6 7/8	11	4 1/2	6 7/8	15	11/16 x 7/8	1655	382	1661	385

TABLE 6 — CP0020 - 20 GA. GALVANIZED OR STAINLESS STEEL - 40 P.S.F.

DISTANCE BETWEEN GUIDES (D.B.G.) THRU: (FT.-IN.)	WINDLOCK FLAT LOCATION ON INNER ANGLE (IN.)	SLIP (IN.)	WINDLOCK	GUIDE ASSEMBLY TYPE	WINDLOCK FLAT WELD PITCH SPACING (IN.)	FASTENER DIAMETER (IN.)	ASSEMBLY FASTENER SAE GRADE 8 MAXIMUM O.C. SPACING (IN.)	CONCRETE STRUCTURE MINIMUM 3,000 P.S.I. HILTI KWIK BOLT 3			CONCRETE STRUCTURE MINIMUM 3,000 P.S.I. POWERS WEDGE-BOLT			CONCRETE STRUCTURE MINIMUM 3,000 P.S.I. SIMPSON WEDGE ALL			STEEL STRUCTURE MINIMUM 1/4" FILLET WELD ENTIRE PERIMETER OF SLOT OR GR. 8 THRU BOLT		SUPERIMPOSED LOADS POSITIVE (+)		SUPERIMPOSED LOADS NEGATIVE (-)	
								MAX. O.C. SPACING (IN.)	MIN. EMBED. (IN.)	MIN. EDGE DISTANCE (IN.)	MAX. O.C. SPACING (IN.)	MIN. EMBED. (IN.)	MIN. EDGE DISTANCE (IN.)	MAX. O.C. SPACING (IN.)	MIN. EMBED. (IN.)	MIN. EDGE DISTANCE (IN.)	MAX. O.C. SPACING (IN.)	SLOT SIZE (IN.)	Vx (LBS.)	Vy (LBS.)	Vx (LBS.)	Vy (LBS.)
6'-5"	N/R	N/R	N/R	344*	N/R	3/8	24	21	2 1/2	5 3/4	24	2 1/2	5 3/4	16	2 9/16	5 3/4	24	9/16 x 3/4	0	130	0	127
14'-5"	1 1/2	0.656	CP0628	344	8	1/2	12	6	3 1/2	5 3/4	N/A	N/A	N/A	5 1/2	3 3/8	5 3/4	12 (SEE NOTE 4)	9/16 x 3/4	922	289	930	292
17'-5"	1 1/2	0.656	CP0628	445	8	5/8	18	12	4	6 13/16	12	4	6 13/16	13	4 1/2	6 13/16	18	11/16 x 7/8	1518	350	1539	356
24'-5"	2	1.2	CP0628	546	8	5/8	15	8	4	6 7/8	8	4	6 7/8	9	4 1/2	6 7/8	12	11/16 x 7/8	2103	489	2111	494
25'-5"	2 1/2	1.7	CP0628	648	8	3/4	18	13	4 3/4	7 1/2	12	5	7 1/2	12	5	7 1/2	18	13/16 x 1	1852	507	1855	511

TABLE 7 — CP0020 - 20 GA. GALVANIZED OR STAINLESS STEEL - 50 P.S.F.

DISTANCE BETWEEN GUIDES (D.B.G.) THRU: (FT.-IN.)	WINDLOCK FLAT LOCATION ON INNER ANGLE (IN.)	SLIP (IN.)	WINDLOCK	GUIDE ASSEMBLY TYPE	WINDLOCK FLAT WELD PITCH SPACING (IN.)	FASTENER DIAMETER (IN.)	ASSEMBLY FASTENER SAE GRADE 8 MAXIMUM O.C. SPACING (IN.)	CONCRETE STRUCTURE MINIMUM 3,000 P.S.I. HILTI KWIK BOLT 3			CONCRETE STRUCTURE MINIMUM 3,000 P.S.I. POWERS WEDGE-BOLT			CONCRETE STRUCTURE MINIMUM 3,000 P.S.I. SIMPSON WEDGE ALL			STEEL STRUCTURE MINIMUM 1/4" FILLET WELD ENTIRE PERIMETER OF SLOT OR GR. 8 THRU BOLT		SUPERIMPOSED LOADS POSITIVE (+)		SUPERIMPOSED LOADS NEGATIVE (-)	
								MAX. O.C. SPACING (IN.)	MIN. EMBED. (IN.)	MIN. EDGE DISTANCE (IN.)	MAX. O.C. SPACING (IN.)	MIN. EMBED. (IN.)	MIN. EDGE DISTANCE (IN.)	MAX. O.C. SPACING (IN.)	MIN. EMBED. (IN.)	MIN. EDGE DISTANCE (IN.)	MAX. O.C. SPACING (IN.)	SLOT SIZE (IN.)	Vx (LBS.)	Vy (LBS.)	Vx (LBS.)	Vy (LBS.)
5'-5"	N/R	N/R	N/R	344*	N/R	3/8	24	20	2 1/2	5 3/4	24	2 1/2	5 3/4	16	2 9/16	5 3/4	24	9/16 x 3/4	0	137	0	133
14'-5"	1 1/2	0.656	CP0628	344	8	1/2	12	6	3 1/2	5 3/4	N/A	N/A	N/A	5 1/2	3 3/8	5 3/4	12 (SEE NOTE 4)	9/16 x 3/4	1265	362	1274	366
21'-5"	2	1.2	CP0628	546	8	5/8	15	8	4	6 7/8	8	4	6 7/8	9	4 1/2	6 7/8	12	11/16 x 7/8	2119	536	2129	542
24'-5"	2 1/2	1.7	CP0628	648	6	3/4	18	11	4 3/4	7 1/2	10	5	7 1/2	10	5	7 1/2	18	13/16 x 1	2194	609	2197	614
25'-5"	2 1/2	1.7	CP0628	648	6	3/4	18	9	4 3/4	7 1/2	10	5	7 1/2	10	5	7 1/2	15	13/16 x 1	2351	635	2355	639

TABLE 8 — CP0020 - 20 GA. GALVANIZED OR STAINLESS STEEL - 60 P.S.F.

DISTANCE BETWEEN GUIDES (D.B.G.) THRU: (FT.-IN.)	WINDLOCK FLAT LOCATION ON INNER ANGLE (IN.)	SLIP (IN.)	WINDLOCK	GUIDE ASSEMBLY TYPE	WINDLOCK FLAT WELD PITCH SPACING (IN.)	FASTENER DIAMETER (IN.)	ASSEMBLY FASTENER SAE GRADE 8 MAXIMUM O.C. SPACING (IN.)	CONCRETE STRUCTURE MINIMUM 3,000 P.S.I. HILTI KWIK BOLT 3			CONCRETE STRUCTURE MINIMUM 3,000 P.S.I. POWERS WEDGE-BOLT			CONCRETE STRUCTURE MINIMUM 3,000 P.S.I. SIMPSON WEDGE ALL			STEEL STRUCTURE MINIMUM 1/4" FILLET WELD ENTIRE PERIMETER OF SLOT OR GR. 8 THRU BOLT		SUPERIMPOSED LOADS POSITIVE (+)		SUPERIMPOSED LOADS NEGATIVE (-)	
								MAX. O.C. SPACING (IN.)	MIN. EMBED. (IN.)	MIN. EDGE DISTANCE (IN.)	MAX. O.C. SPACING (IN.)	MIN. EMBED. (IN.)	MIN. EDGE DISTANCE (IN.)	MAX. O.C. SPACING (IN.)	MIN. EMBED. (IN.)	MIN. EDGE DISTANCE (IN.)	MAX. O.C. SPACING (IN.)	SLOT SIZE (IN.)	Vx (LBS.)	Vy (LBS.)	Vx (LBS.)	Vy (LBS.)
4'-5"	N/R	N/R	N/R	344*	N/R	3/8	24	20	2 1/2	5 3/4	24	2 1/2	5 3/4	16	2 9/16	5 3/4	24	9/16 x 3/4	0	134	0	130
14'-5"	1 1/2	0.656	CP0628	344	8	1/2	12	6	3 1/2	5 3/4	N/A	N/A	N/A	5 1/2	3 3/8	5 3/4	12 (SEE NOTE 4)	9/16 x 3/4	1608	435	1618	440
16'-5"	1 1/2	0.656	CP0628	546	6	5/8	15	8	4	6 7/8	8	4	6 7/8	9	4 1/2	6 7/8	12	11/16 x 7/8	2163	496	2192	505
20'-5"	2 1/8	1.3	CP0628	648	6	3/4	18	10	4 3/4	7 1/2	10	5	7 1/2	10	5	7 1/2	15	13/16 x 1	2243	613	2254	620
24'-5"	2 1/2	1.7	CP0628 & CP0646	648	6	3/4	15	7	4 3/4	7 1/2	9	5	7 1/2	8	5	7 1/2	15	13/16 x 1	2663	732	2667	737
25'-5"	2 1/4	1.406	CP0628 & CP0646	648	6	3/4	15	6	4 3/4	7 1/2	N/A	N/A	N/A	7	5	7 1/2	15 (SEE NOTE 5)	13/16 x 1	3079	762	3079	762

NOTES:
1. N/A - NOT AVAILABLE.
2. * - REPRESENTS NON-WINDLOCK.
3. N/R - NOT REQUIRED.
4. 1 5/8" LONG WELD ALSO REQUIRED AT TOE OF WALL ANGLE AT 12" O.C. (APPLIES TO BOX GUIDE ONLY).
5. 4" LONG WELD ALSO REQUIRED AT HEEL OF WALL ANGLE AT 15" O.C. (APPLIES TO BOX GUIDE ONLY).

Clopay
CLOPAY CORPORATION
8585 DUKE BOULEVARD
MASON, OH 45040

TITLE
WINDLOAD CONFIGURATIONS
NON-INSULATED ROLLING DOOR
CP0020 SLAT

SIZE	DRAWN	DWG NO	REV
D	R. MAGGIO	16-43 SD	*

SCALE N/A SHEET 6 OF 7

LTR	REVISION	DATE	BY	E.C.O.
*	ORIGINAL ISSUE	10/08/2010	R.M.	*

TABLE 9 — CP0020 - 18 GA. GALVANIZED OR STAINLESS STEEL - 30 P.S.F.

DISTANCE BETWEEN GUIDES (D.B.G.) THRU: (FT.-IN.)	WINDLOCK FLAT LOCATION ON INNER ANGLE (IN.)	SLIP (IN.)	WINDLOCK	GUIDE ASSEMBLY TYPE	WINDLOCK FLAT WELD PITCH SPACING (IN.)	FASTENER DIAMETER (IN.)	ASSEMBLY FASTENER SAE GRADE 8 MAXIMUM O.C. SPACING (IN.)	CONCRETE STRUCTURE MINIMUM 3,000 P.S.I. HILTI KWIK BOLT 3			CONCRETE STRUCTURE MINIMUM 3,000 P.S.I. POWERS WEDGE-BOLT			CONCRETE STRUCTURE MINIMUM 3,000 P.S.I. SIMPSON WEDGE ALL			STEEL STRUCTURE MINIMUM 1/4" FILLET WELD ENTIRE PERIMETER OF SLOT OR GR. 8 THRU BOLT		SUPERIMPOSED LOADS POSITIVE (+)		SUPERIMPOSED LOADS NEGATIVE (-)	
								MAX. O.C. SPACING (IN.)	MIN. EMBED. (IN.)	MIN. EDGE DISTANCE (IN.)	MAX. O.C. SPACING (IN.)	MIN. EMBED. (IN.)	MIN. EDGE DISTANCE (IN.)	MAX. O.C. SPACING (IN.)	MIN. EMBED. (IN.)	MIN. EDGE DISTANCE (IN.)	MAX. O.C. SPACING (IN.)	SLOT SIZE (IN.)	Vx (LBS.)	Vy (LBS.)	Vx (LBS.)	Vy (LBS.)
8'-5"	N/R	N/R	N/R	344*	N/R	3/8	24	21	2 1/2	5 3/4	24	2 1/2	5 3/4	17	2 9/16	5 3/4	24	9/16 x 3/4	0	127	0	125
14'-5"	1 1/2	0.656	CP0628	344	8	1/2	12	6	3 1/2	5 3/4	N/A	N/A	N/A	5 1/2	3 3/8	5 3/4	12 (SEE NOTE 4)	9/16 x 3/4	732	217	737	219
22'-5"	2	1.2	CP0627	445	10	5/8	18	14	4	6 13/16	15	4	6 13/16	15	4 1/2	6 13/16	18	11/16 x 7/8	1212	336	1219	339
23'-5"	2	1.2	CP0628	445	8	5/8	18	13	4	6 13/16	12	4	6 13/16	14	4 1/2	6 13/16	18	11/16 x 7/8	1373	351	1380	354
25'-5"	2	1.2	CP0628	546	8	5/8	18	11	4	6 7/8	10	4	6 7/8	12	4 1/2	6 7/8	15	11/16 x 7/8	1613	381	1620	385

TABLE 10 — CP0020 - 18 GA. GALVANIZED OR STAINLESS STEEL - 40 P.S.F.

DISTANCE BETWEEN GUIDES (D.B.G.) THRU: (FT.-IN.)	WINDLOCK FLAT LOCATION ON INNER ANGLE (IN.)	SLIP (IN.)	WINDLOCK	GUIDE ASSEMBLY TYPE	WINDLOCK FLAT WELD PITCH SPACING (IN.)	FASTENER DIAMETER (IN.)	ASSEMBLY FASTENER SAE GRADE 8 MAXIMUM O.C. SPACING (IN.)	CONCRETE STRUCTURE MINIMUM 3,000 P.S.I. HILTI KWIK BOLT 3			CONCRETE STRUCTURE MINIMUM 3,000 P.S.I. POWERS WEDGE-BOLT			CONCRETE STRUCTURE MINIMUM 3,000 P.S.I. SIMPSON WEDGE ALL			STEEL STRUCTURE MINIMUM 1/4" FILLET WELD ENTIRE PERIMETER OF SLOT OR GR. 8 THRU BOLT		SUPERIMPOSED LOADS POSITIVE (+)		SUPERIMPOSED LOADS NEGATIVE (-)	
								MAX. O.C. SPACING (IN.)	MIN. EMBED. (IN.)	MIN. EDGE DISTANCE (IN.)	MAX. O.C. SPACING (IN.)	MIN. EMBED. (IN.)	MIN. EDGE DISTANCE (IN.)	MAX. O.C. SPACING (IN.)	MIN. EMBED. (IN.)	MIN. EDGE DISTANCE (IN.)	MAX. O.C. SPACING (IN.)	SLOT SIZE (IN.)	Vx (LBS.)	Vy (LBS.)	Vx (LBS.)	Vy (LBS.)
6'-5"	N/R	N/R	N/R	344*	N/R	3/8	24	21	2 1/2	5 3/4	24	2 1/2	5 3/4	16	2 9/16	5 3/4	24	9/16 x 3/4	0	130	0	127
14'-5"	1 1/2	0.656	CP0628	344	8	1/2	12	6	3 1/2	5 3/4	N/A	N/A	N/A	5 1/2	3 3/8	5 3/4	12 (SEE NOTE 4)	9/16 x 3/4	1075	290	1081	293
17'-5"	1 1/2	0.7	CP0628	445	8	5/8	18	12	4	6 13/16	12	4	6 13/16	13	4 1/2	6 13/16	18	11/16 x 7/8	1428	349	1453	356
25'-5"	2	1.2	CP0628	546	6	5/8	15	8	4	6 7/8	8	4	6 7/8	8	4 1/2	6 7/8	12	11/16 x 7/8	2213	509	2221	514

TABLE 11 — CP0020 - 18 GA. GALVANIZED OR STAINLESS STEEL - 50 P.S.F.

DISTANCE BETWEEN GUIDES (D.B.G.) THRU: (FT.-IN.)	WINDLOCK FLAT LOCATION ON INNER ANGLE (IN.)	SLIP (IN.)	WINDLOCK	GUIDE ASSEMBLY TYPE	WINDLOCK FLAT WELD PITCH SPACING (IN.)	FASTENER DIAMETER (IN.)	ASSEMBLY FASTENER SAE GRADE 8 MAXIMUM O.C. SPACING (IN.)	CONCRETE STRUCTURE MINIMUM 3,000 P.S.I. HILTI KWIK BOLT 3			CONCRETE STRUCTURE MINIMUM 3,000 P.S.I. POWERS WEDGE-BOLT			CONCRETE STRUCTURE MINIMUM 3,000 P.S.I. SIMPSON WEDGE ALL			STEEL STRUCTURE MINIMUM 1/4" FILLET WELD ENTIRE PERIMETER OF SLOT OR GR. 8 THRU BOLT		SUPERIMPOSED LOADS POSITIVE (+)		SUPERIMPOSED LOADS NEGATIVE (-)	
								MAX. O.C. SPACING (IN.)	MIN. EMBED. (IN.)	MIN. EDGE DISTANCE (IN.)	MAX. O.C. SPACING (IN.)	MIN. EMBED. (IN.)	MIN. EDGE DISTANCE (IN.)	MAX. O.C. SPACING (IN.)	MIN. EMBED. (IN.)	MIN. EDGE DISTANCE (IN.)	MAX. O.C. SPACING (IN.)	SLOT SIZE (IN.)	Vx (LBS.)	Vy (LBS.)	Vx (LBS.)	Vy (LBS.)
6'-5"	N/R	N/R	N/R	344*	N/R	3/8	24	17	2 1/2	5 3/4	18	2 1/2	5 3/4	13	2 9/16	5 3/4	24	9/16 x 3/4	0	162	0	158
14'-5"	1 1/2	0.656	CP0628	344	8	1/2	12	6	3 1/2	5 3/4	N/A	N/A	N/A	5 1/2	3 3/8	5 3/4	12 (SEE NOTE 4)	9/16 x 3/4	1418	362	1425	367
21'-5"	2	1.2	CP0628	546	8	5/8	15	8	4	6 7/8	8	4	6 7/8	9	4 1/2	6 7/8	12	11/16 x 7/8	2060	535	2071	541
24'-5"	2 1/2	1.7	CP0628	648	6	3/4	18	11	4 3/4	7 1/2	10	5	7 1/2	11	5	7 1/2	18	13/16 x 1	2149	609	2153	613
25'-5"	2 1/2	1.7	CP0628	648	6	3/4	18	10	4 3/4	7 1/2	10	5	7 1/2	10	5	7 1/2	15	13/16 x 1	2310	634	2314	638

TABLE 12 — CP0020 - 18 GA. GALVANIZED OR STAINLESS STEEL - 60 P.S.F.

DISTANCE BETWEEN GUIDES (D.B.G.) THRU: (FT.-IN.)	WINDLOCK FLAT LOCATION ON INNER ANGLE (IN.)	SLIP (IN.)	WINDLOCK	GUIDE ASSEMBLY TYPE	WINDLOCK FLAT WELD PITCH SPACING (IN.)	FASTENER DIAMETER (IN.)	ASSEMBLY FASTENER SAE GRADE 8 MAXIMUM O.C. SPACING (IN.)	CONCRETE STRUCTURE MINIMUM 3,000 P.S.I. HILTI KWIK BOLT 3			CONCRETE STRUCTURE MINIMUM 3,000 P.S.I. POWERS WEDGE-BOLT			CONCRETE STRUCTURE MINIMUM 3,000 P.S.I. SIMPSON WEDGE ALL			STEEL STRUCTURE MINIMUM 1/4" FILLET WELD ENTIRE PERIMETER OF SLOT OR GR. 8 THRU BOLT		SUPERIMPOSED LOADS POSITIVE (+)		SUPERIMPOSED LOADS NEGATIVE (-)	
								MAX. O.C. SPACING (IN.)	MIN. EMBED. (IN.)	MIN. EDGE DISTANCE (IN.)	MAX. O.C. SPACING (IN.)	MIN. EMBED. (IN.)	MIN. EDGE DISTANCE (IN.)	MAX. O.C. SPACING (IN.)	MIN. EMBED. (IN.)	MIN. EDGE DISTANCE (IN.)	MAX. O.C. SPACING (IN.)	SLOT SIZE (IN.)	Vx (LBS.)	Vy (LBS.)	Vx (LBS.)	Vy (LBS.)
5'-5"	N/R	N/R	N/R	344*	N/R	3/8	24	16	2 1/2	5 3/4	18	2 1/2	5 3/4	13	2 9/16	5 3/4	24	9/16 x 3/4	0	164	0	160
14'-5"	1 1/2	0.656	CP0628	344	8	1/2	12	6	3 1/2	5 3/4	N/A	N/A	N/A	5 1/2	3 3/8	5 3/4	12 (SEE NOTE 4)	9/16 x 3/4	1762	435	1769	440
16'-5"	1 1/2	0.7	CP0628	546	8	5/8	15	9	4	6 7/8	8	4	6 7/8	9	4 1/2	6 7/8	12	11/16 x 7/8	2063	495	2095	504
19'-5"	1 7/8	1	CP0628	648	6	3/4	18	10	4 3/4	7 1/2	10	5	7 1/2	10	5	7 1/2	15	13/16 x 1	2243	584	2261	592
25'-5"	2 1/4	1.4	CP0628 & CP0646	648	6	3/4	15	6	4 3/4	7 1/2	N/A	N/A	N/A	7	5	7 1/2	15 (SEE NOTE 5)	13/16 x 1	3074	763	3082	770

NOTES:
1. N/A - NOT AVAILABLE.
2. * - REPRESENTS NON-WINDLOCK.
3. N/R - NOT REQUIRED.
4. 1 5/8" LONG WELD ALSO REQUIRED AT TOE OF WALL ANGLE AT 12" O.C. (APPLIES TO BOX GUIDE ONLY).
5. 4" LONG WELD ALSO REQUIRED AT HEEL OF WALL ANGLE AT 15" O.C. (APPLIES TO BOX GUIDE ONLY).

Clopay
CLOPAY CORPORATION
8585 DUKE BOULEVARD
MASON, OH 45040

TITLE
WINDLOAD CONFIGURATIONS
NON-INSULATED ROLLING DOOR
CP0020 SLAT

SIZE	DRAWN	DWG NO	REV
D	R. MAGGIO	16-43 SD	*

SCALE N/A — SHEET 7 OF 7