NOTES
1. (−W/L) = NEGATIVE WINDLOAD
   (+W/L) = POSITIVE WINDLOAD
2. WALL ANGLES MAY BE WELDED TO STEEL JAMB. SEE SHEET 2 FOR WELD DETAIL
3. RATED DESIGN LOAD ±65 PSF.
4. CURTAIN MATERIAL: ASTM A−653 CS TYPE B. GUIDE MATERIAL: ASTM A−36
5. ALTERNATE CURTAIN MATERIAL: AISI−304 SS. MINIMUM YIELD 40,000 PSI.
6. CURTAIN MATERIAL SHALL BE GALVANIZED ACCORDING TO ASTM A−525 TO G40 MINIMUM.
7. THE DOOR MUST BE INSTALLED WITH THE TENSION WHEEL FACING THE INSIDE OF THE BUILDING.
8. SLIDE BOLTS MUST BE ENGAGED AND CHAIN MUST BE HOOKED WHEN HURRICANE WINDS ARE ANNOUNCED
9. WINDLOCK MATERIAL: LOW CARBON CAST STEEL, GRADE 70−46 (485−250) PER ASTM A27. MIN TENSILE 70−KSI MIN YIELD 36−KSI. MIN ELONG 22%
10. WINDLOCKS ATTACHED TO EACH SLAT (CONTINUOUS)
11. RIVET SPECIFICATIONS: 1/4" DIAMETER RIVET, MINIMUM 1006 LOW−CARBON STEEL.

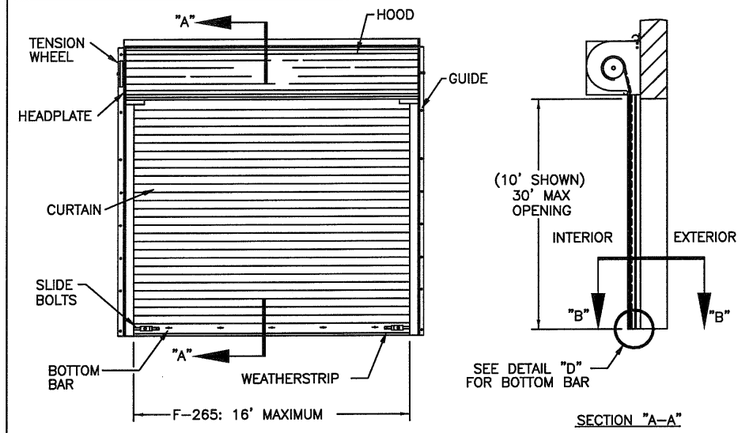

SECTION "A−A"

SHEET REVISION RECORD		
3	2	1
D	F	G

REVISIONS

ER	REV	DESCRIPTION	DATE	APPROVAL
	E	REV PER EN 20807	6/16/06	LK
	F	REV PER EN 20814	6/30/06	LK
500692	G	REV PER ER	3/7/11	SFT

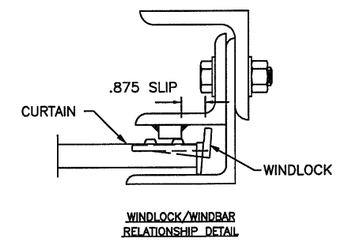

WINDLOCK/WINDBAR RELATIONSHIP DETAIL

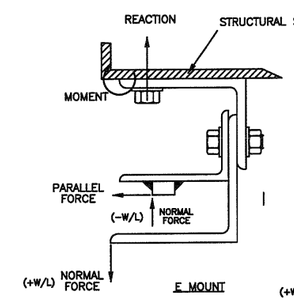

E MOUNT

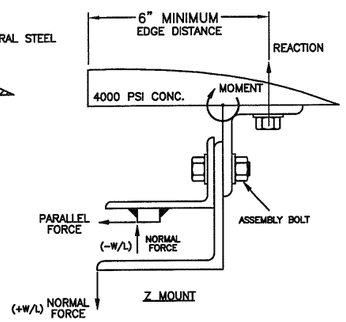

Z MOUNT

F−265 − DOOR SIZE REF. SUMMARY

LBS/FT DOOR HEIGHT	(E−MOUNT) LOADS 22 GA **	20 GA	18 GA	(Z−MOUNT) LOADS * 22 GA **	20 GA	18 GA
REACTION	7479	7301	6984	2561	2507	2409
NORMAL	520	520	520	520	520	520
PARALLEL	1990	1940	1851	1990	1940	1851

* LOADS − PER FOOT OF HEIGHT

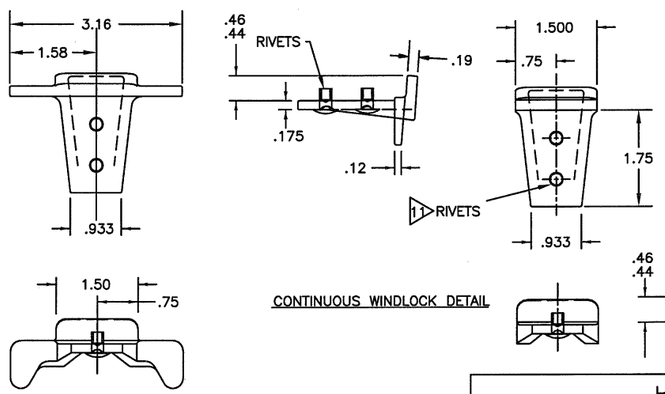

CONTINUOUS WINDLOCK DETAIL

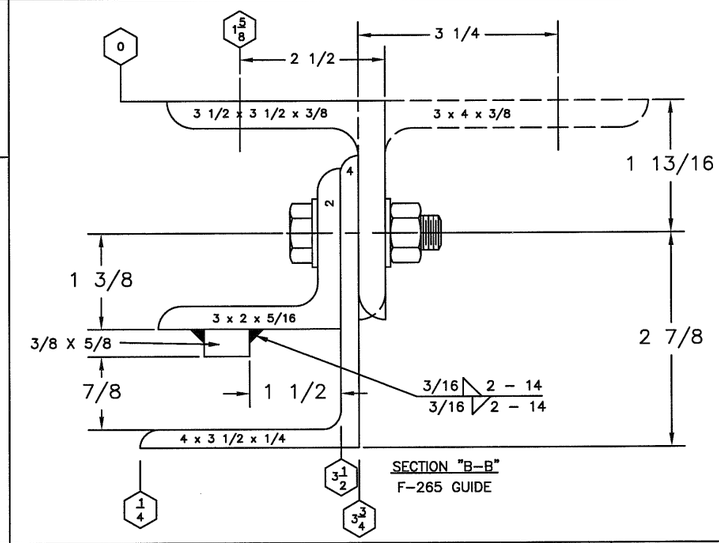

SECTION "B−B"
F−265 GUIDE

	ASSEMBLY BOLT	WALL BOLT STEEL JAMB	WALL BOLT * CONCRETE JAMB
F−265	1/2" GRADE 5, 11" O.C.	1/2" GRADE 5, 11" O.C.	1/2" 5" EMB POWERS BOLT, OR 1/2" 4" EMB POWERS WEDGE BOLT 6" O.C.

* 4000 PSI MINIMUM AND 6" EDGE DISTANCE FOR ANCHORS

2 NOTE: FOR DETAILS ON WELDING GUIDES TO STEEL JAMBS SEE SHEET 2.

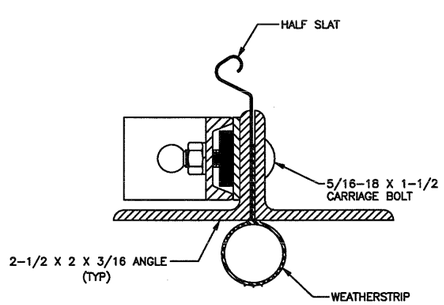

SECT "C−C"

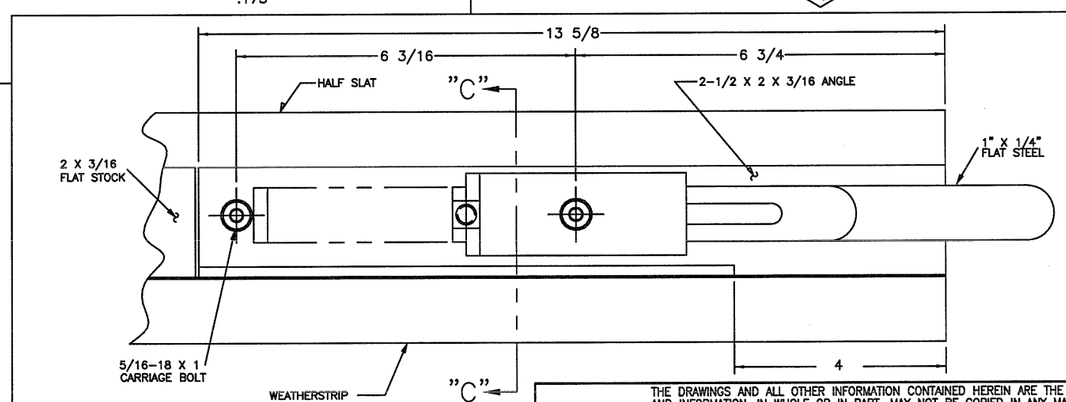

DETAIL "D"
BOTTOM BAR

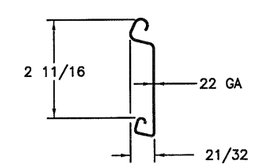

F−265 SLAT
GAUGE OPTIONS: 22**, 20, 18
**TESTED IN ACCORDANCE WITH DADE COUNTY PROTOCOLS TAS 201−94, TAS 202−94, AND TAS 203−94

SERIES 611/621 ARE EQUIVALENT CONSTRUCTION

Mark A. Sawicki 3/23/12
Mark A. Sawicki, P.E.
TXPE 106291

OVERHEAD DOOR CORPORATION
2501 SOUTH STATE HWY 121 BUSINESS
LEWISVILLE, TX 75067

LeROY G. KRUPKE, P.E. #36580

THE DRAWINGS AND ALL OTHER INFORMATION CONTAINED HEREIN ARE THE CONFIDENTIAL AND PROPRIETARY PROPERTY OF OVERHEAD DOOR CORPORATION AND ITS AFFILIATED COMPANIES. THIS DRAWING AND INFORMATION, IN WHOLE OR IN PART, MAY NOT BE COPIED IN ANY MANNER OR DISCLOSED TO ANYONE WITHOUT THE PRIOR WRITTEN CONSENT OF OVERHEAD DOOR CORPORATION. NO DISCLOSURE OF ANY OF THIS DRAWING OR INFORMATION IS INTENDED TO OPERATE AS A LICENSE OR AUTHORIZATION TO USE IT FOR ANY PURPOSE WITHOUT THE SPECIFIC WRITTEN CONSENT OF OVERHEAD DOOR CORPORATION.

REF DWG	USED ON

THIRD ANGLE PROJECTION
ASME Y14.100 AND Y14.5 APPLY, UNLESS OTHERWISE SPECIFIED DIMENSIONS ARE IN U.S. CUSTOMARY UNITS.

TOLERANCES UNLESS OTHERWISE SPECIFIED

HOLE DIAMETER	WHOLE NUMBERS: ± .25
UNDER .251 +.004/−.003	.X ± .1
.251 TO .500 +.006/−.003	.XX ± .03
OVER .500 +.008/−.003	.XXX ± .010
FRACTIONS ± 1/16	ANGLES: ± .5°

FINISH 5
UNIT OF MEASURE N/A
The Genuine. The Original. OVERHEAD DOOR LEWISVILLE, TEXAS
MATERIAL: 4

	NAME	DATE
DRAWN BY:	K WILSON	8/8/03
CHECKED BY:	JD FAW	9/5/03
APPROVED BY:	L KRUPKE	9/5/03

DRAWING TITLE: SERIES 610/620, ROLLING SERVICE DOOR 16' DADE COUNTY
DRAWING NUMBER D− 308125
SCALE: NONE SHEET 1 OF 3

REVISIONS				
ER	REV	DESCRIPTION	DATE	APPROVAL
	D	REV PER EN 20807	6/16/06	LK
	E	REV PER EN 20814	6/30/06	LK
500692	F	REV PER ER	3/7/11	SFT

▷ NOTES

CALCULATIONS:

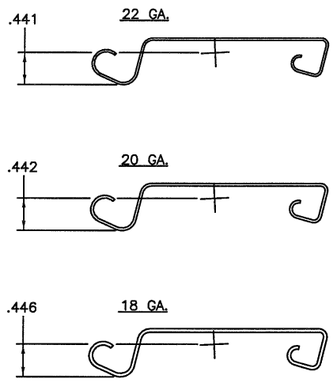

CURTAIN SLAT PITCH = 2.67 IN. OR 4.494 SLATS PER FOOT, PROPERTIES ON A PER FOOT BASIS:

	I(IN⁴)	A(IN²)	C(IN)
22 GA.	0.0310	0.7015	0.441
20 GA.	0.0377	0.8422	0.444
18 GA.	0.0494	1.0965	0.450

CALCULATIONS SHOWN FOR 22 GA. SLAT.

WINDLOCK SLIP DISTANCE= 0.875"/SIDE

W= DOOR WIDTH

$\boxed{W = 16 \text{ FT.}}$

D = CURTAIN DEFLECTION

$D = [(0.75 * 12 * w)\ (\text{WINDLOAD SLIP})]^{1/2}$

$D = [(0.75 * 12 * 16 * 0.875)]^{1/2}$

$\boxed{D = 11.22 \text{ IN.}}$

S_Y = YIELD STRESS OF SLAT MATERIAL

S_Y = 40,000 PSI

E = MODULUS OF ELASTICITY

E = 29,000,000 PSI

Q_B = WINDLOAD HELD IN BENDING

$Q_B = \frac{2EID}{45W^4}$ OR $\frac{2S_YI}{3W^2C}$ (LESSER VALUE)

$Q_B = \frac{2(29{,}000{,}000)(0.0310)(11.22)}{45(16)^4}$

$\boxed{Q_B = 6.84}$

$Q_B = \frac{2(40{,}000)(0.0310)}{3(16^2)(0.441)}$

$Q_B = 7.33$

$\boxed{Q = 65 \text{ PSF}}$

Q_T = WINDLOAD HELD IN TENSION

$Q_T = Q - Q_B$

$Q_T = 65 - 6.84$

$Q_T = 58.16$ PSF

$T_E = \frac{3Q_T W^2}{2D}$

$\boxed{T_E \quad 1990}$

T_F = THRUST LOAD ON GUIDES PER FOOT OF HEIGHT.

$T_F = \frac{Q \cdot W}{2}$

$\boxed{T_F = 520 \text{ LB/FT.}}$

T_S = TENSION/SLAT

$T_S = 1990/4.494$

$\boxed{T_S = 443 \text{ LB/SLAT}}$

M_R= MAXIMUM RESULTANT MOMENT APPLIED TO JAMB (Z–MOUNT)

$M_R = 1990(3.560)+520(2.375)$

$\boxed{M_R = 8319 \text{ IN}\cdot\text{LB}}$

M_R= MAXIMUM RESULTANT MOMENT APPLIED TO JAMB (E–MOUNT)

$M_R = 1990(3.560)+520(0.75)$

$\boxed{M_R = 7479 \text{ IN}\cdot\text{LB}}$

WINDLOCK FASTENERS

DESCRIPTION: SEMI–TUBULAR OVAL HEAD RIVET

MATERIAL: LOW CARBON STEEL, ZINC OR CADMIUM PLATED

SIZE: 1/4" X 7/16" LONG (.244" MIN. DIA.)

A_R = CROSS SECTIONAL AREA/RIVET

$A_R = \frac{\pi \cdot D^2}{4}$

$A_R = 0.047$ IN²

S_S = SHEAR STRESS ACROSS TWO END FASTENERS

$S_S = T_S/(2 \cdot A_R)$

$S_S = 443/(2 \cdot 0.047)$

$\boxed{S_S = 4713 \text{ PSI}}$

WINDBAR WELDS

A_W = AREA OF WELD

A_W = LENGTH · FILLET WIDTH

$A_W = (2)(0.1875)$

$A_W = 0.375$ IN²

S_W = SHEAR STRESS ACROSS WELD

S_W = (7 IN)(1 FT/12 IN)(1990 LB/FT)/(0.375 IN²)

$\boxed{S_W = 3096 \text{ PSI}}$

WALL ATTACHMENT BOLTS

STEEL JAMB–POSITIVE WINDLOAD (MAX LOAD E–MOUNT)

R_B = WALL ATTACHMENT BOLT REACTION

$R_B = (11/12)[7479]/1.00$

$\boxed{R_B = 6856 \text{ LB.}}$

CONCRETE JAMB–POSITIVE WINDLOAD (MAX LOAD Z–MOUNT)

$R_B = (9/12)[8319]/3.25$

$\boxed{R_B = 1920 \text{ LB.}}$

"S" = W + 7"

SLAT LG = W + 5 1/4"

PIPE LG = W + 3 1/4"

BOTTOM BAR LG = W + 5 1/4" (COPES = 4")

WALL ATTACHMENT WELD

A_W = AREA OF WELD

$A_W = 2 \times 2 \times .313 \times .707$

$A_W = .885$ IN²

S_W = SHEAR STRESS ACROSS WELD

$S_W = 11/12\ (1990)/.885$

$S_W = 2061$ PSI

T_W = TENSION STRESS FROM BENDING AND NORMAL LOAD

T_W F W R

$T_W = 11/12\ [520/.885 + 8319/\ [2 \times 2.5 \times .313 \times .707]]$

$T_W = 7431$ PSI

R_W = RESULTANT WELD STRESS

$R_W = [S_W^2 + T_W^2]^{1/2}$

$R_W = 7712$ PSI

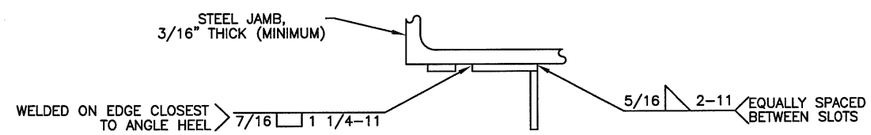

TOP VIEW

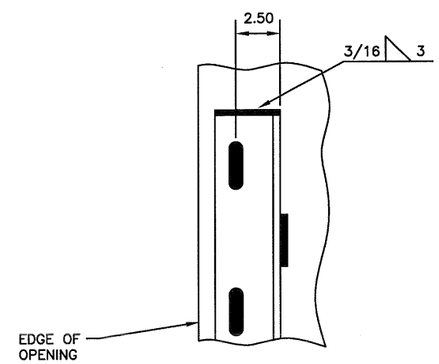

FRONT VIEW OF WALL ANGLE

DETAILS FOR WELDING "E" GUIDES TO STEEL JAMBS

Mark A. Sawicki 3/23/12

STATE OF TEXAS MARK A. SAWICKI 106291 LICENSED PROFESSIONAL ENGINEER

Mark A. Sawicki, P.E.
TYPE 106291

OVERHEAD DOOR CORPORATION
2501 SOUTH STATE HWY 121 BUSINESS
LEWISVILLE, TX 75067

LeROY G. KRUPKE, P.E. #36580

THE DRAWINGS AND ALL OTHER INFORMATION CONTAINED HEREIN ARE THE CONFIDENTIAL AND PROPRIETARY PROPERTY OF OVERHEAD DOOR CORPORATION AND ITS AFFILIATED COMPANIES. THIS DRAWING AND INFORMATION, IN WHOLE OR IN PART, MAY NOT BE COPIED IN ANY MANNER OR DISCLOSED TO ANYONE WITHOUT THE PRIOR WRITTEN CONSENT OF OVERHEAD DOOR CORPORATION. NO DISCLOSURE OF ANY OF THIS DRAWING OR INFORMATION IS INTENDED TO OPERATE AS A LICENSE OR AUTHORIZATION TO USE IT FOR ANY PURPOSE WITHOUT THE SPECIFIC WRITTEN CONSENT OF OVERHEAD DOOR CORPORATION.

REF DWG	USED ON

THIRD ANGLE PROJECTION

ASME Y14.100 AND Y14.5 APPLY, UNLESS OTHERWISE SPECIFIED DIMENSIONS ARE IN U.S. CUSTOMARY UNITS.

TOLERANCES UNLESS OTHERWISE SPECIFIED

HOLE DIAMETER	WHOLE NUMBERS:	± .25
UNDER .251 +.004/–.003	.X	± .1
.251 TO .500 +.006/–.003	.XX	± .03
OVER .500 +.008/–.003	.XXX	± .010
FRACTIONS	ANGLES:	± .5°
± 1/16		

FINISH 5

UNIT OF MEASURE N/A

The Genuine. The Original. OVERHEAD DOOR LEWISVILLE, TEXAS

MATERIAL: 4

	NAME	DATE
DRAWN BY:	K WILSON	8/8/03
CHECKED BY:	JD FAW	9/5/03
APPROVED BY:	L KRUPKE	9/5/03

DRAWING TITLE: SERIES 610/620, ROLLING SERVICE DOOR 16' DADE COUNTY

DRAWING NUMBER D– 308125

SCALE: NONE SHEET 2 OF 3

REVISIONS				
ER	REV	DESCRIPTION	DATE	APPROVAL
	B	REV PER EN 20807	6/16/06	LK
	C	REV PER EN 20814	6/30/06	LK
500692	D	REV PER ER	3/7/11	SFT

▷ NOTES

1. MATERIAL: ALUMINUM 3003 H14 (0.03 THICK) WITH TRANSPARENT KELSTRIP COVERING.
2. COLOR: HANSCHY RED CS 2311.
3. STAMP FACTORY ORDER NUMBER HERE.
4. A LETTER MUST BE STAMPED ON ROLLING FIRE DOORS TO IDENTIFY MANUFACTURING PLANT (I.E., USE "P" FOR PENNSYLVANIA).
5. FASTENER FOR TAG IS P/N 080276-1004(STEEL DRIVE SCREW). TAG WILL BE MOUNTED IN THE MIDDLE OF THE BOTTOM BAR.
6. STAMP SLAT TYPE HERE.
7. STAMP ACCEPTANCE NUMBER HERE.

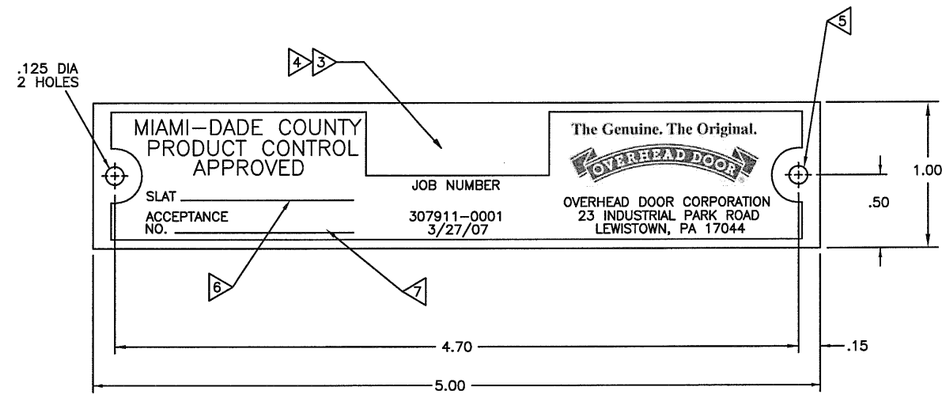

P/N 307911-0001 – DADE CO. APPROVAL TAG, ROLLING DOORS & GRILLES

SCALE: 2/1

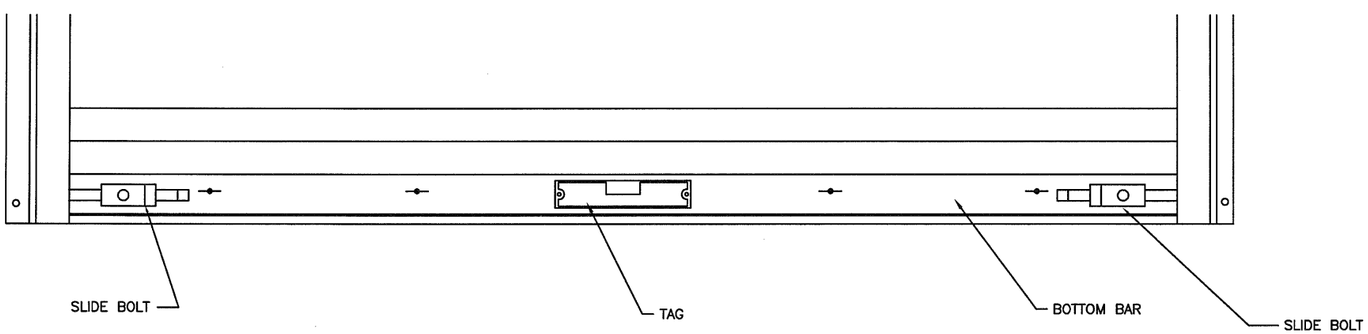

DETAIL "E" 5

SCALE: 4/1

Mark Sawicki
3/23/12

STATE OF TEXAS
MARK A. SAWICKI
106291
LICENSED
PROFESSIONAL ENGINEER

Mark A. Sawicki, P.E.
TXPE 106291

OVERHEAD DOOR CORPORATION
2501 SOUTH STATE HWY 121 BUSINESS
LEWISVILLE, TX 75067

LeROY G. KRUPKE, P.E. #36580

THE DRAWINGS AND ALL OTHER INFORMATION CONTAINED HEREIN ARE THE CONFIDENTIAL AND PROPRIETARY PROPERTY OF OVERHEAD DOOR CORPORATION AND ITS AFFILIATED COMPANIES. THIS DRAWING AND INFORMATION, IN WHOLE OR IN PART, MAY NOT BE COPIED IN ANY MANNER OR DISCLOSED TO ANYONE WITHOUT THE PRIOR WRITTEN CONSENT OF OVERHEAD DOOR CORPORATION. NO DISCLOSURE OF ANY OF THIS DRAWING OR INFORMATION IS INTENDED TO OPERATE AS A LICENSE OR AUTHORIZATION TO USE IT FOR ANY PURPOSE WITHOUT THE SPECIFIC WRITTEN CONSENT OF OVERHEAD DOOR CORPORATION.

REF DWG	USED ON

THIRD ANGLE PROJECTION

ASME Y14.100 AND Y14.5 APPLY, UNLESS OTHERWISE SPECIFIED DIMENSIONS ARE IN U.S. CUSTOMARY UNITS.

TOLERANCES UNLESS OTHERWISE SPECIFIED	
HOLE DIAMETER	
UNDER .251 +.004/-.003	
.251 TO .500 +.006/-.003	
OVER .500 +.008/-.003	
FRACTIONS	
± 1/16	
WHOLE NUMBERS:	± .25
.X	± .1
.XX	± .03
.XXX	± .010
ANGLES:	± .5°

FINISH: N/A

UNIT OF MEASURE: N/A

The Genuine. The Original. OVERHEAD DOOR — LEWISVILLE, TEXAS

MATERIAL: N/A

	NAME	DATE
DRAWN BY:	M WOMACK	10/10/03
CHECKED BY:	JD FAW	10/10/03
APPROVED BY:	L KRUPKE	10/10/03

DRAWING TITLE: SERIES 610/620, ROLLING SERVICE DOOR 16' DADE COUNTY

DRAWING NUMBER: D– 308125

SCALE: NOTED — SHEET 3 OF 3