▷ NOTES

1. (−W/L) = NEGATIVE WINDLOAD
   (+W/L) = POSITIVE WINDLOAD
2. WALL ANGLES MAY BE WELDED TO STEEL JAMB. SEE SHEET 2 FOR DOOR WELD DETAIL
3. RATED DESIGN LOAD ±65 PSF.
4. CURTAIN MATERIAL: ASTM A−653, CS TYPE B. GUIDE MATERIAL: ASTM A−36
5. ALTERNATE CURTAIN MATERIAL: AISI−304 SS. MINIMUM YIELD 40,000 PSI.
6. CURTAIN MATERIAL SHALL BE GALVANIZED ACCORDING TO ASTM A−525 TO G40 MINIMUM.
7. THE DOOR MUST BE INSTALLED WITH THE TENSION WHEEL FACING THE INSIDE OF THE BUILDING.
8. SLIDE BOLTS MUST BE ENGAGED AND CHAIN MUST BE HOOKED WHEN HURRICANE WINDS ARE ANNOUNCED
9. WINDLOCK MATERIAL: LOW CARBON CAST STEEL, GRADE 70−46 (485−250) PER ASTM A27. MIN TENSILE 70−KSI MIN YIELD 36−KSI. MIN ELONG 22%
10. WINDLOCKS ATTACHED TO EACH SLAT (CONTINUOUS)
11. RIVET SPECIFICATIONS: 1/4" DIAMETER RIVET, MINIMUM 1006 LOW−CARBON STEEL.

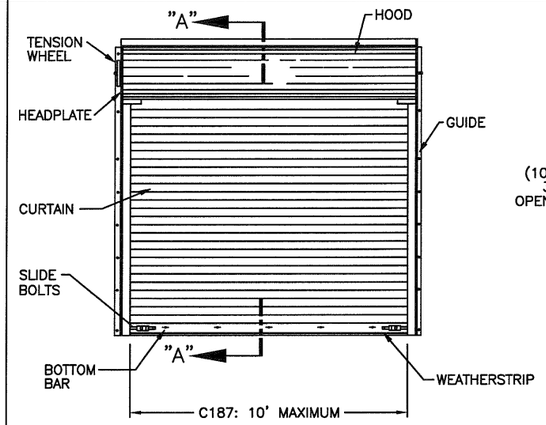

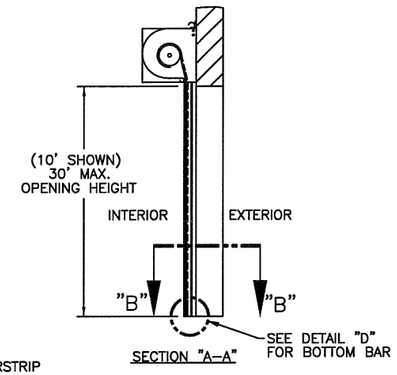

SECTION "A−A"

SHEET REVISION RECORD		
3	2	1
D	F	G

REVISIONS

ER	REV	DESCRIPTION	DATE	APPROVAL
	E	REV PER EN 20807	6/16/06	LK
	F	REV PER EN 20814	6/30/06	LK
500692	G	REV PER ER	3/7/11	SFT

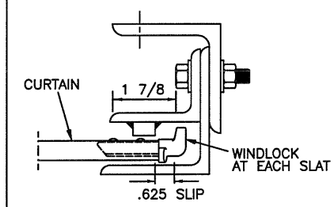

WINDLOCK/WINDBAR RELATIONSHIP DETAIL

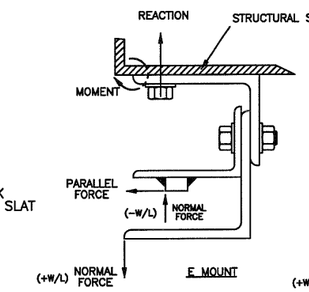

E MOUNT

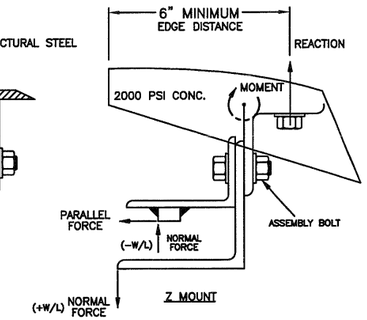

Z MOUNT

* LOADS − PER FOOT OF HEIGHT

C−187 − DOOR SIZE REF. SUMMARY

LBS/FT DOOR	(E−MOUNT) LOADS			(Z−MOUNT) LOADS *		
HEIGHT	22 GA **	20 GA	18 GA	22 GA **	20 GA	18 GA
REACTION	4182	3933	3333	1115	1057	919
NORMAL	325	325	325	325	325	325
PARALLEL	958	897	750	958	897	750

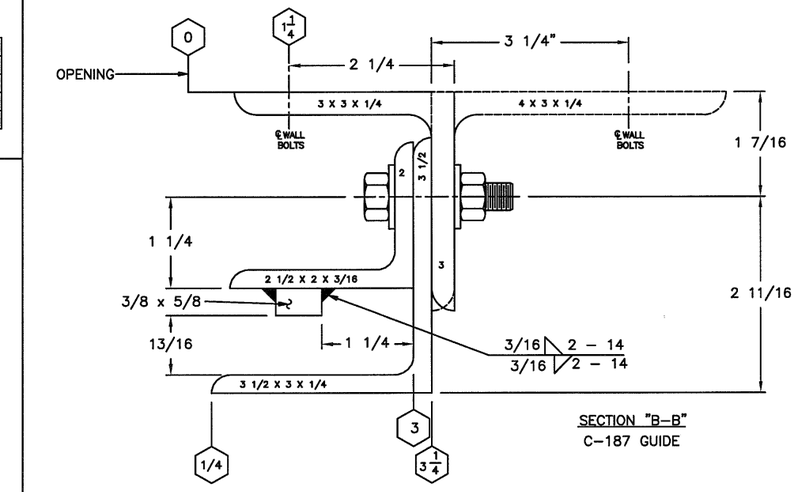

SECTION "B−B"
C−187 GUIDE

	ASSEMBLY BOLT	WALL BOLT STEEL JAMB	WALL BOLT * CONCRETE JAMB
C−187	3/8" GRADE 5, 12" O.C.	3/8" GRADE 5, 11" O.C.	1/2", 5" EMB POWERS BOLT OR 1/2", 4" EMB POWERS WEDGE BOLT 11" O.C.

* 2000 PSI MINIMUM & 6" MINIMUM EDGE DISTANCE FOR ANCHORS

2 NOTE: FOR DETAILS ON WELDING GUIDES TO STEEL JAMBS SEE SHEET 2.

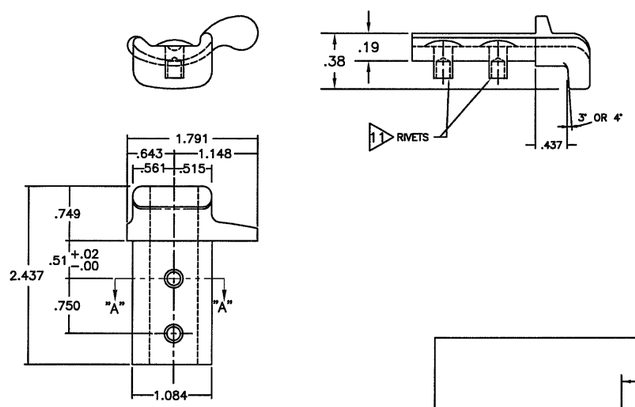

CONTINUOUS WINDLOCK DETAIL

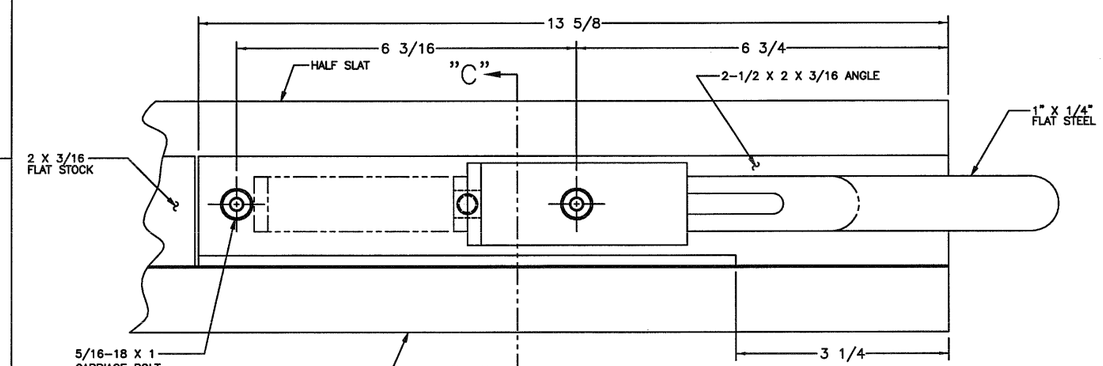

DETAIL "D"
BOTTOM BAR

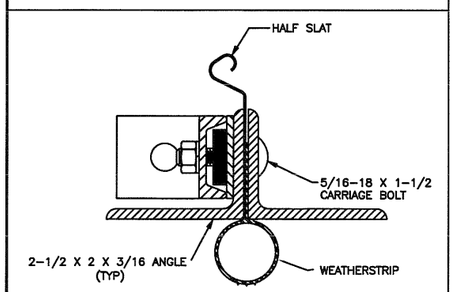

SECT "C−C"

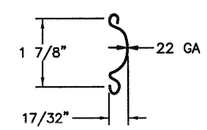

C−187 SLAT
GAUGE OPTIONS: 22**, 20, 18
**TESTED IN ACCORDANCE WITH DADE COUNTY PROTOCOLS TAS 201−94, TAS 202−94, AND TAS 203−94

SERIES 611 IS EQUIVALENT CONSTRUCTION

Mark Sowell 3/23/12

Mark A. Sowell, P.E.
TXPE106791

OVERHEAD DOOR CORPORATION
2501 SOUTH STATE HWY 121 BUSINESS
LEWISVILLE, TX 75067

LeROY G. KRUPKE, P.E. #36580

THE DRAWINGS AND ALL OTHER INFORMATION CONTAINED HEREIN ARE THE CONFIDENTIAL AND PROPRIETARY PROPERTY OF OVERHEAD DOOR CORPORATION AND ITS AFFILIATED COMPANIES. THIS DRAWING AND INFORMATION, IN WHOLE OR IN PART, MAY NOT BE COPIED IN ANY MANNER OR DISCLOSED TO ANYONE WITHOUT THE PRIOR WRITTEN CONSENT OF OVERHEAD DOOR CORPORATION. NO DISCLOSURE OF ANY OF THIS DRAWING OR INFORMATION IS INTENDED TO OPERATE AS A LICENSE OR AUTHORIZATION TO USE IT FOR ANY PURPOSE WITHOUT THE SPECIFIC WRITTEN CONSENT OF OVERHEAD DOOR CORPORATION.

REF DWG	USED ON

THIRD ANGLE PROJECTION

ASME Y14.100 AND Y14.5 APPLY, UNLESS OTHERWISE SPECIFIED DIMENSIONS ARE IN U.S. CUSTOMARY UNITS.

TOLERANCES UNLESS OTHERWISE SPECIFIED

HOLE DIAMETER	WHOLE NUMBERS:	± .25
UNDER .251 +.004/−.003	.X	± .1
.251 TO .500 +.006/−.003	.XX	± .03
OVER .500 +.008/−.003	.XXX	± .010
FRACTIONS	ANGLES:	± .5°
± 1/16		

FINISH 5

UNIT OF MEASURE N/A

The Genuine. The Original. OVERHEAD DOOR LEWISVILLE, TEXAS

MATERIAL: 4

		DATE
DRAWN BY:	K WILSON	8/8/03
CHECKED BY:	L KRUPKE	9/5/03
APPROVED BY:	JD FAW	9/5/03

DRAWING TITLE: SERIES 610, ROLLING SERVICE DOOR 10' DADE COUNTY

DRAWING NUMBER D− 308123

SCALE: NONE SHEET 1 OF 3

REVISIONS				
ER	REV	DESCRIPTION	DATE	APPROVAL
	D	REV PER EN 20807	6/16/06	LK
	E	REV PER EN 20814	6/30/06	LK
500692	F	REV PER ER	3/7/11	SFT

▷ NOTES

CALCULATIONS:

22 GA. .275

Ixx = 0.0028
Area = 0.1021

20 GA. .278

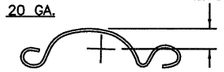

Ixx = 0.0033
Area = 0.1227

18 GA. .285

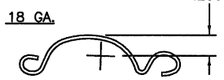

Ixx = 0.0045
Area = 0.1606

CURTAIN SLAT PITCH = 1.90 IN. OR 6.316 SLATS PER FOOT, PROPERTIES ON A PER FOOT BASIS:

	I(IN⁴)	A(IN²)	C(IN)
22 GA.	0.0177	0.6461	0.275
20 GA.	0.0208	0.7712	0.276
18 GA.	0.0265	.9953	0.278

CALCULATIONS SHOWN FOR 22 GA. SLAT.

WINDLOCK SLIP DISTANCE = 0.625 IN./SIDE

W = DOOR WIDTH

$\boxed{W = 10 \text{ FT.}}$

D = CURTAIN DEFLECTION

$D = [0.75\ (12)\ W\ (\text{WINDLOCK SLIP})]^{1/2}$

$D = [0.75\ (12)\ (10)\ (0.625)]^{1/2}$

$\boxed{D = 7.50 \text{ IN.}}$

S_Y = YIELD STRESS OF SLAT MATERIAL

S_Y = 40,000 PSI

E = MODULUS OF ELASTICITY

E = 29,000,000 PSI

Q_B = WINDLOAD HELD IN BENDING

$Q_B = \frac{2EID}{45W^4}$ OR $\frac{2S_YI}{3W^2C}$ (LESSER VALUE)

$Q_B = \frac{2(29{,}000{,}000)(0.0177)(7.50)}{45(10)^4}$

Q_B = 17.11 PSF

$Q_B = \frac{2(40{,}000)(0.0177)}{3(10^2)(0.275)}$

$\boxed{Q = 65 \text{ PSF}}$

Q_T = WINDLOAD HELD IN TENSION

$Q_T = Q - Q_B$

$Q_T = 65 - 17.11$

Q_T = 47.89 PSF

$T_E = \frac{3Q_T W^2}{2D}$

$\boxed{T_E = 958 \text{ LB/FT.}}$

T_F = THRUST LOAD ON GUIDES PER FOOT OF HEIGHT.

$T_F = \frac{QW}{2}$

$\boxed{T_F = 325 \text{ LB/FT.}}$

T_S = TENSION/SLAT

$T_S = 958/6.316$

$\boxed{T_S = 152 \text{ LB/SLAT}}$

M_R = MAXIMUM RESULTANT MOMENT APPLIED TO JAMB (Z-MOUNT)

$M_R = 958(3.063)+325(2.125)$

$\boxed{M_R = 3625 \text{ IN}\cdot\text{LB}}$

M_R = MAXIMUM RESULTANT MOMENT APPLIED TO JAMB (E-MOUNT)

$M_R = 958(3.063) + 325(0.625)$

$\boxed{M_R = 3137 \text{ IN}\cdot\text{LB}}$

RIVETS

DESCRIPTION: SEMI-TUBULAR OVAL HEAD.

MATERIAL: LOW CARBON STEEL, ZINC OR CADMIUM PLATED.

SIZE: 3/16 IN. DIA. X 3/8 IN. LONG

A_R = CROSS SECTIONAL AREA/RIVET

$A_R = \frac{\pi \cdot D^2}{4}$

A_R = 0.027 IN²

S_S = SHEAR STRESS ACROSS TWO END RIVETS

$S_S = T_S/(2 \cdot A_R)$

$S_S = 152/(2 \cdot 0.027)$

$\boxed{S_S = 2815 \text{ PSI}}$

WINDBAR WELDS

A_W = AREA OF WELD

A_W = LENGTH · FILLET WIDTH

$A_W = (2)(0.1875)$

A_W = 0.375 IN²

S_W = SHEAR STRESS ACROSS WELD

S_W = (7 IN)(958 LB/FT)(1 FT/12 IN)/(0.375 IN²)

$\boxed{S_W = 1486 \text{ PSI}}$

WALL ATTACHMENT BOLTS (MAXIMUM LOAD)

STEEL JAMB–POSITIVE WINDLOAD

R_B = WALL ATTACHMENT BOLT REACTION

$R_B = [11/12(3137)]/0.75$

$\boxed{R_B = 3784 \text{ LB.}}$

CONCRETE JAMB–POSITIVE WINDLOAD (Z-MOUNT)

$R_B = [14/12(3625)]/3.25$

$\boxed{R_B = 1301 \text{ LB.}}$

WALL ATTACHMENT WELD

A_W = AREA OF WELD

A_W = 1 1/2 x 2 x .188 x .707

A_W = 0.399 IN²

S_W = SHEAR STRESS ACROSS WELD

S_W = 11/12 (958) / .399

S_W = 2201 PSI

T_W = TENSION STRESS FROM BENDING AND NORMAL LOAD

$T_W = T_W/A_W + M_R/[\text{WELD LENGTH} \times \text{WELD WIDTH AT ANGLE} \times \text{WELD SIZE} \times .707]$

$T_W = 11/12\,[[325/.399 + 3625/[1.5 \times 2.25 \times .188 \times .707]]$

T_W = 8154 PSI

R_W = RESULTANT WELD STRESS

$R_W = [\ S_W^2 + T_W^2\ ]^{1/2}$

$\boxed{R_W = 8445 \text{ PSI}}$

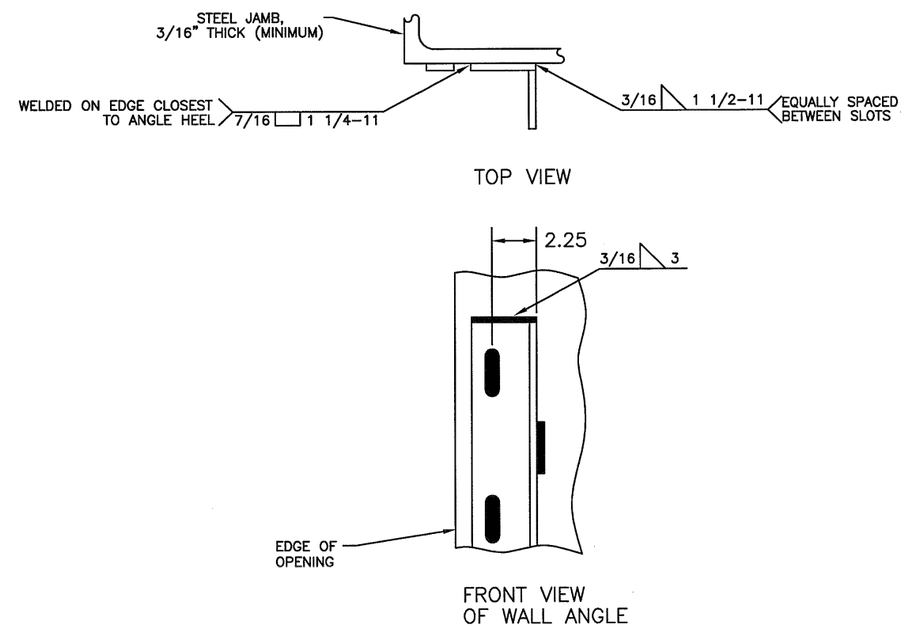

DETAILS FOR WELDING "E" GUIDES TO STEEL JAMBS

Mark Sawicki
3/23/12

Mark A. Sawicki, P.E
TXPE 106291

OVERHEAD DOOR CORPORATION
2501 SOUTH STATE HWY 121 BUSINESS
LEWISVILLE, TX 75067

LeROY G. KRUPKE, P.E. #36580

THE DRAWINGS AND ALL OTHER INFORMATION CONTAINED HEREIN ARE THE CONFIDENTIAL AND PROPRIETARY PROPERTY OF OVERHEAD DOOR CORPORATION AND ITS AFFILIATED COMPANIES. THIS DRAWING AND INFORMATION, IN WHOLE OR IN PART, MAY NOT BE COPIED IN ANY MANNER OR DISCLOSED TO ANYONE WITHOUT THE PRIOR WRITTEN CONSENT OF OVERHEAD DOOR CORPORATION. NO DISCLOSURE OF ANY OF THIS DRAWING OR INFORMATION IS INTENDED TO OPERATE AS A LICENSE OR AUTHORIZATION TO USE IT FOR ANY PURPOSE WITHOUT THE SPECIFIC WRITTEN CONSENT OF OVERHEAD DOOR CORPORATION.

REF DWG	USED ON

THIRD ANGLE PROJECTION

ASME Y14.100 AND Y14.5 APPLY, UNLESS OTHERWISE SPECIFIED DIMENSIONS ARE IN U.S. CUSTOMARY UNITS.

TOLERANCES UNLESS OTHERWISE SPECIFIED

HOLE DIAMETER	WHOLE NUMBERS:	± .25
UNDER .251 +.004/–.003	.X	± .1
.251 TO .500 +.006/–.003	.XX	± .03
OVER .500 +.008/–.003	.XXX	± .010
FRACTIONS	ANGLES:	± .5°
± 1/16		

FINISH

UNIT OF MEASURE

The Genuine. The Original. OVERHEAD DOOR LEWISVILLE, TEXAS

MATERIAL: N/A

	NAME	DATE
DRAWN BY:	K WILSON	8/8/03
CHECKED BY:	JD FAW	9/5/03
APPROVED BY:	L KRUPKE	9/5/03

DRAWING TITLE: SERIES 610, ROLLING SERVICE DOOR 10' DADE COUNTY

DRAWING NUMBER D– 308123

SCALE: NONE SHEET 2 OF 3

REVISIONS				
ER	REV	DESCRIPTION	DATE	APPROVAL
	B	REV PER EN 20807	6/16/06	LK
	C	REV PER EN 20814	6/30/06	LK
500692	D	REV PER ER	3/7/11	SFT

▷ NOTES

1. MATERIAL: ALUMINUM 3003 H14 (0.03 THICK) WITH TRANSPARENT KELSTRIP COVERING.
2. COLOR: HANSCHY RED CS 2311.
3. STAMP FACTORY ORDER NUMBER HERE.
4. A LETTER MUST BE STAMPED ON ROLLING FIRE DOORS TO IDENTIFY MANUFACTURING PLANT (I.E., USE "P" FOR PENNSYLVANIA).
5. FASTENER FOR TAG IS P/N 080276-1004(STEEL DRIVE SCREW). TAG WILL BE MOUNTED IN THE MIDDLE OF THE BOTTOM BAR.
6. STAMP SLAT TYPE HERE.
7. STAMP ACCEPTANCE NUMBER HERE.

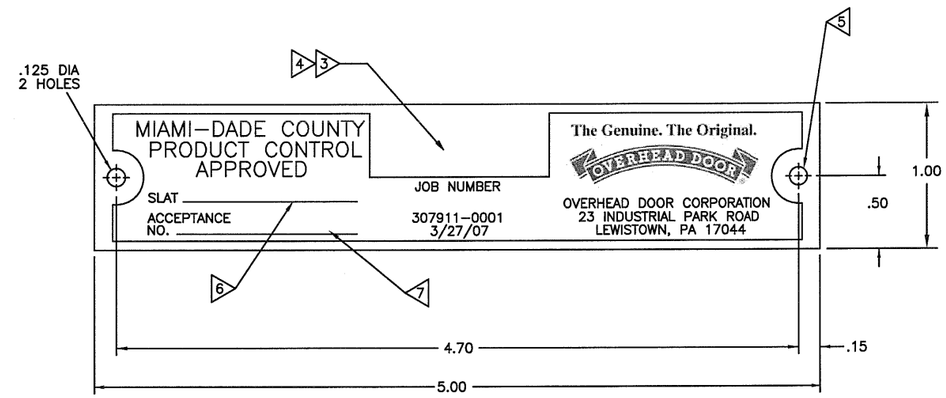

P/N 307911-0001 – DADE CO. APPROVAL TAG, ROLLING DOORS & GRILLES

SCALE: 2/1

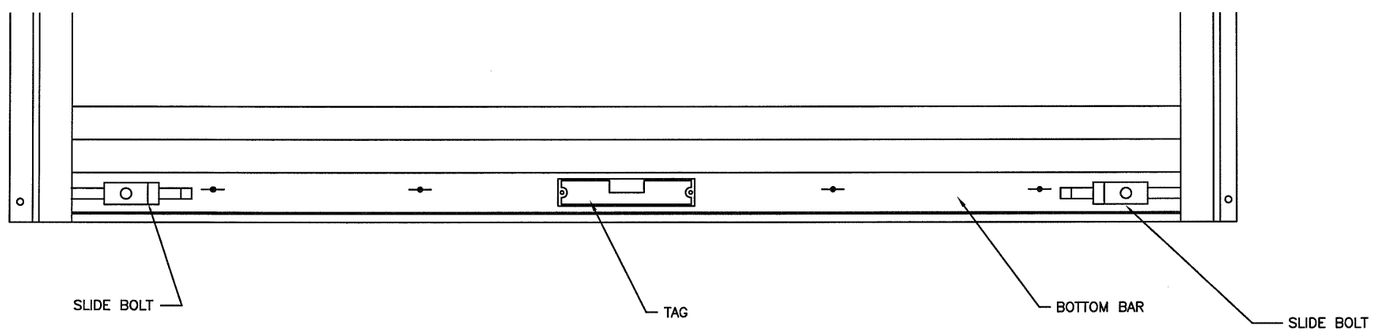

DETAIL "E" 5

SCALE: 4/1

Mark Sawick 3/23/10

Mark A. Sawick, P.E.
TXPE106291

OVERHEAD DOOR CORPORATION
2501 SOUTH STATE HWY 121 BUSINESS
LEWISVILLE, TX 75067

LeROY G. KRUPKE, P.E. #36580

THE DRAWINGS AND ALL OTHER INFORMATION CONTAINED HEREIN ARE THE CONFIDENTIAL AND PROPRIETARY PROPERTY OF OVERHEAD DOOR CORPORATION AND ITS AFFILIATED COMPANIES. THIS DRAWING AND INFORMATION, IN WHOLE OR IN PART, MAY NOT BE COPIED IN ANY MANNER OR DISCLOSED TO ANYONE WITHOUT THE PRIOR WRITTEN CONSENT OF OVERHEAD DOOR CORPORATION. NO DISCLOSURE OF ANY OF THIS DRAWING OR INFORMATION IS INTENDED TO OPERATE AS A LICENSE OR AUTHORIZATION TO USE IT FOR ANY PURPOSE WITHOUT THE SPECIFIC WRITTEN CONSENT OF OVERHEAD DOOR CORPORATION.

		THIRD ANGLE PROJECTION	TOLERANCES UNLESS OTHERWISE SPECIFIED		FINISH	The Genuine. The Original. OVERHEAD DOOR LEWISVILLE, TEXAS	NAME	DATE	DRAWING TITLE: SERIES 610, ROLLING SERVICE DOOR 10' DADE COUNTY
			HOLE DIAMETER	WHOLE NUMBERS: ± .25	N/A		DRAWN BY: M WOMACK	10/10/03	
			UNDER .251 +.004/-.003	.X ± .1	UNIT OF MEASURE	MATERIAL: N/A	CHECKED BY: JD FAW	10/10/03	DRAWING NUMBER D- 308123
		ASME Y14.100 AND Y14.5 APPLY, UNLESS OTHERWISE SPECIFIED DIMENSIONS ARE IN U.S. CUSTOMARY UNITS.	.251 TO .500 +.006/-.003	.XX ± .03			APPROVED BY: L KRUPKE	10/10/03	SCALE: NOTED SHEET 3 OF 3
			OVER .500 +.008/-.003	.XXX ± .010					
			FRACTIONS	ANGLES: ± .5°					
REF DWG	USED ON		± 1/16		N/A				