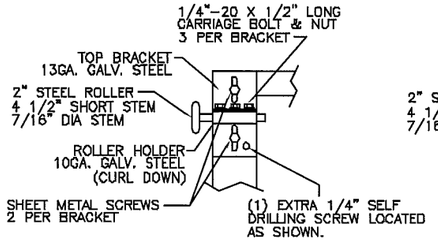

DETAIL F (ALTERNATE)

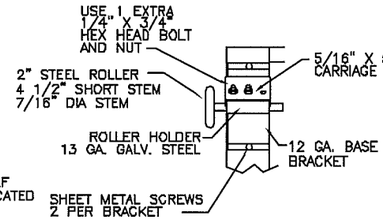

DETAIL F

LEFT SIDE SHOWN
RIGHT SIDE OPPOSITE

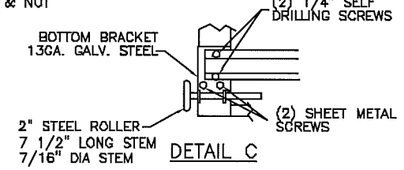

DETAIL C

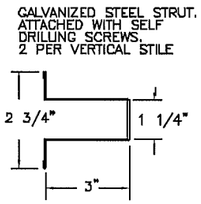

DETAIL D

3" 18GA. (0.044") WIDE STRUT

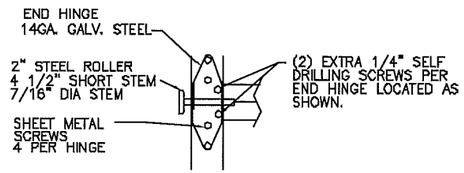

DETAIL G

STRUTTING SCHEDULE
2 per Bottom Section (1 over bottom bracket and 1 below the hinges)
1 per Intermediate Section (Top of section below the hinges)
1 per Top Section (Top of section below the Top Roller Carriers)

NOTE: UNLESS SPECIFIED OTHERWISE, ALL FASTENERS ARE 1/4"-14 X 3/4" HEX HEAD SHEET METAL SCREWS OR 1/4" X 3/4" HEX HEAD SELF DRILLING SCREWS.

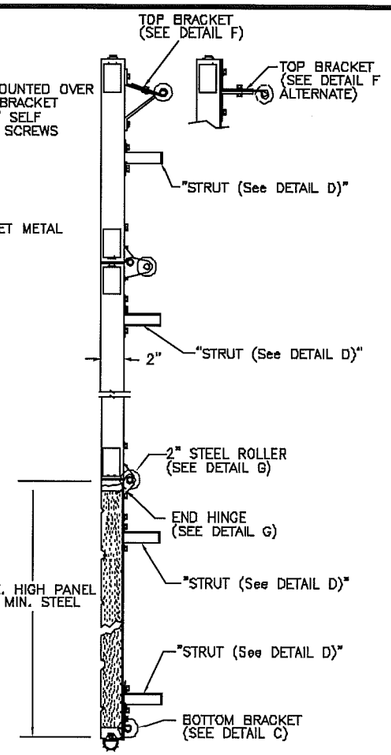

SECTION A-A

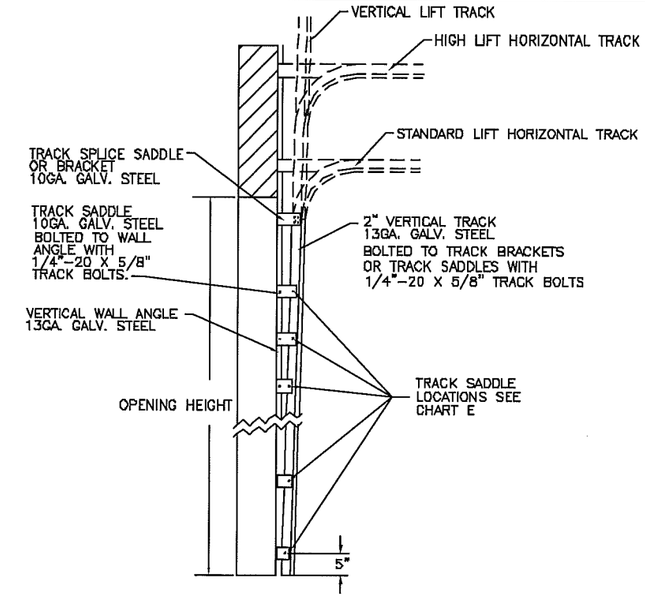

CHART E		
Door Ht.	No. of Track Saddles	TRACK SADDLE LOCATIONS
8'-0"	4	5", 29", 53", 75"
9'-0"	4	5", 29", 53", 75"
10'-0"	5	5", 29", 53", 75", 101",
12"-0"	6	5", 29", 53", 75", 101", 125"
14'-0"	7	5", 29", 53", 75", 101", 125", 149"
16'-0"	8	5", 29", 53", 75", 101", 125", 149", 173"

NOTE: Anchor bolts are located 3/4" above centerline of track saddle. One anchor bolt per track saddle

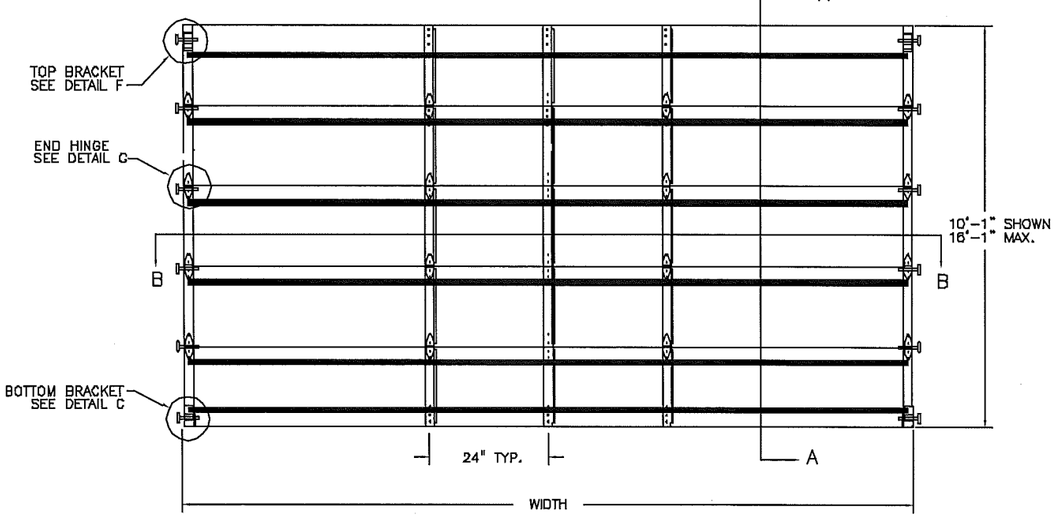

DOOR SIZE		NO. OF CEN. STILES	STILE SPACING	P.S.F. TABLE DESIGN PRESSURE	
WIDTH	HEIGHT			POSITIVE	NEGATIVE
12'-2"	16'-1"	3	24"	+23.7	-26.6

PRESSURES TABULATED ARE BASED ON TESTS OF MODEL 240 (24ga. Panel)
MODEL 200 (20ga. Panel) WILL WITHSTAND EQUAL OR HIGHER PRESSURES

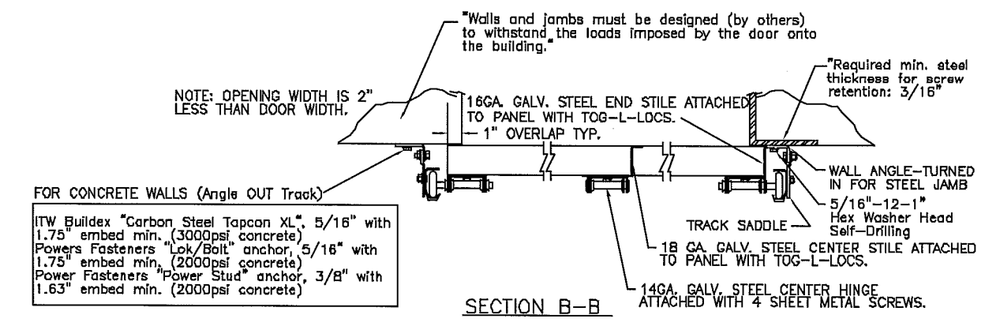

SECTION B-B

FOR CONCRETE WALLS (Angle OUT Track)

ITW Buildex "Carbon Steel Tapcon XL", 5/16" with 1.75" embed min. (3000psi concrete)
Powers Fasteners "Lok/Bolt" anchor, 5/16" with 1.75" embed min. (2000psi concrete)
Power Fasteners "Power Stud" anchor, 3/8" with 1.63" embed min. (2000psi concrete)

REV.	DATE	CHANGE
C	12/15/11	NEW LOGO/ENG. STAMP
B	08/20/09	
A	07/09/09	

STATE OF TEXAS
JOHN E. SCATES
56308
REGISTERED PROFESSIONAL ENGINEER

John E Scates
10/19/12

John E Scates PE
3121 FAIRGATE DR.
Carrollton, TX 75007
TX-PE 56308-F-2203
FL-PE-91737
(972) 492-9500

Professional Engineer's seal provided only for verification of windload construction details.

WINDSOR DOOR
5800 SCOTT HAMILTON DR.
LITTLE ROCK, AR 72209
(501) 562-1872

MODELS: MODEL 240(24GA.)/200(20GA.) SINGLE STRUTS

PART NAME: 12'-2" x 16'-1"
DESIGN LOAD +23.7 -26.6

TOLERANCE: FRAC. ± 1/64" DEC. ± .015 ANG. ± 1°

NEXT LEVEL

DATE: 08-20-09

DWG. NO. 99-B-092-A REV. C

SCALE: NONE

PLOT SCALE

DRN. BY BNB

SHT 1 OF 1