NOTES:

1. GLAZING PANEL OPTION – .090" MINIMUM SSB GLAZING IN MOLDED FRAMES SCREWED TOGETHER WITH A MINIMUM OF (6) #8x1" SCREWS INSTALLED IN TOP SECTION (WITH OR WITHOUT DECORATIVE INSERTS) MEETS UNIFORM STATIC DESIGN PRESSURES SHOWN ON THIS DRAWING. GLAZING SHALL HAVE A MAXIMUM HEIGHT OF 13.75" AND A MAXIMUM LENGTH OF 16.75". GLAZING IS NOT IMPACT RESISTANT AND DOES NOT MEET THE REQUIREMENTS FOR WIND-BORNE DEBRIS REGIONS.

2. VINYL OR WOOD DOOR STOP NAILED A MAXIMUM OF 6" O.C. MUST OVERLAP TOP AND BOTH ENDS OF PANELS MINIMUM 7/16" TO MEET NEGATIVE PRESSURES.

3. SLIDE LOCK OR OPERATOR REQUIRED.

4. SECTION SHALL BE CONSTRUCTED WITH FOAMED IN PLACE POLYURETHANE FOAM INSULATION CHEMICALLY BONDED TO .052" MINIMUM VINYL FACER AND A POLYLAMINATE BACKER. EACH SECTION SHALL HAVE 30 GA STEEL RAILS AT THE TOP AND BOTTOM OF EACH SECTION. END CAP TO HAVE A MINIMUM 1.3" DEPTH.

5. THE DESIGN OF THE SUPPORTING STRUCTURAL ELEMENTS SHALL BE THE RESPONSIBILITY OF THE PROFESSIONAL OF RECORD FOR THE BUILDING OR STRUCTURE AND IN ACCORDANCE WITH CURRENT BUILDING CODES FOR THE LOADS LISTED ON THIS DRAWING.

6. DOOR JAMB TO BE MINIMUM 2x6 STRUCTURAL GRADE LUMBER. REFER TO JAMB CONNECTION SUPPLEMENT FOR ATTACHMENT TO SUPPORTING STRUCTURE.

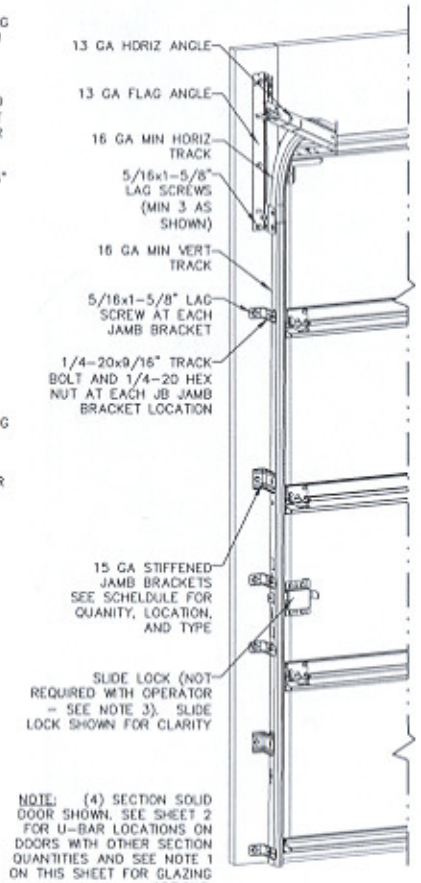

NOTE: (4) SECTION SOLID DOOR SHOWN. SEE SHEET 2 FOR U-BAR LOCATIONS ON DOORS WITH OTHER SECTION QUANTITIES AND SEE NOTE 1 ON THIS SHEET FOR GLAZING OPTIONS.

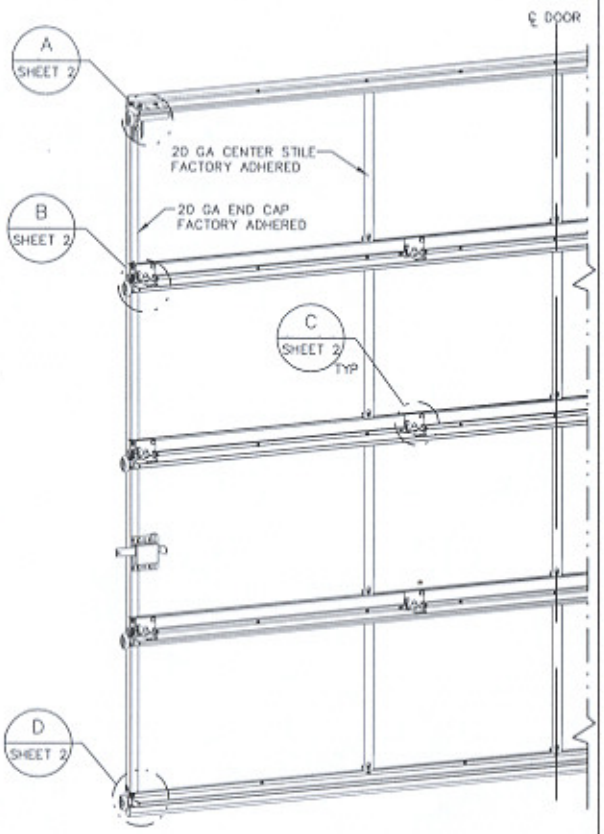

REVISIONS

SUPERIMPOSED DESIGN PRESSURE LOADS ON SUPPORTING STRUCTURE		
MAX DOOR WIDTH	DOOR HEIGHT	UNIFORM LOAD EACH JAMB (PLF)
8'-0"	ALL	+107.6/-123.2
9'-0"	ALL	+121.1/-138.6

JAMB BRACKET SCHEDULE				
DOOR HEIGHT	NO. OF SECTIONS	NO. OF JAMB BRACKETS (EACH JAMB)	TRACK TYPE	LOCATION OF CENTERLINE OF JAMB BRACKETS MEASURED FROM BOTTOM OF TRACK (ALL DIMENSIONS ± 2")
7'-0"	4	6	QI	2" (JB), 13" (QI), 25-1/2" (JB), 34" (JB), 45-1/4" (QI), 63" (JB)
7'-0"	4	6	FAT	2" (JB), 10" (JB), 21-3/4" (JB), 29-3/4" (JB), 42" (JB), 63-1/4" (JB)
8'-0"	5	8	QI	2" (JB), 13" (QI), 23" (JB), 34" (JB), 47-1/4" (QI), 58" (JB), 67" (QI), 75" (JB)
8'-0"	5	8	FAT	2" (JB), 10" (JB), 21-3/4" (JB), 29-3/4" (JB), 48" (JB), 57-1/4" (JB), 66" (JB), 75-1/2" (JB)

NOTE:
(JB) FOLLOWING DIMENSION DENOTES SLOTTED JAMB BRACKET ATTACHED TO TRACK WITH 1/4-20x9/16" TRACK BOLT AND NUT.
(QI) FOLLOWING DIMENSION DENOTES QUICK INSTALL JAMB BRACKET INSTALLED IN BUTTERFLY SLOT. NO ADDITIONAL HARDWARE NEEDED TO ATTACH TO TRACK.

3/4/09

MARK R. BARROW, PE
FLORIDA LICENSE NO. 57389

Wayne Dalton

3395 ADDISON DRIVE
PENSACOLA, FLORIDA 32514
(850) 474-9890

STATIC PRESSURE RATINGS		APPROVED SIZES		SCALE: N.T.S.		SIZE: A
DESIGN (PSF):	+26.90/-30.80	MAX WIDTH:	9'-0"		DATE	NAME
TEST (PSF):	+40.35/-46.20	MAX HEIGHT:	8'-0"	DRAWN	1/18/08	GRT
IMPACT/CYCLIC RATED (YES/NO):	NO	MAX SECTION HEIGHT:	21"	CHECKED	2/27/08	MRB

MODEL 9300

SHEET 1 OF 2

WINDLOAD SPECIFICATION OPTION CODE 1400

DRAWING PART NO. 333508

REV. P

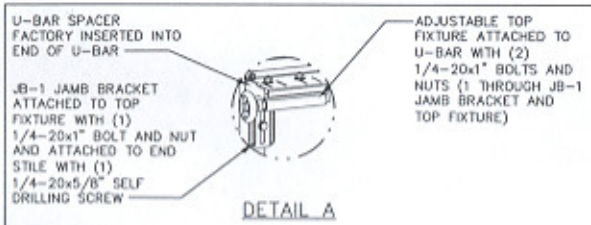

DETAIL A

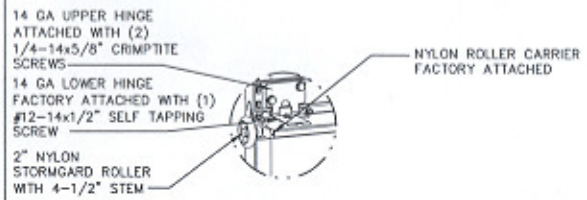

DETAIL B

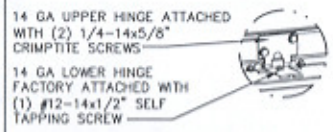

DETAIL C

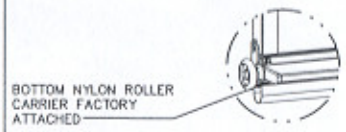

DETAIL D

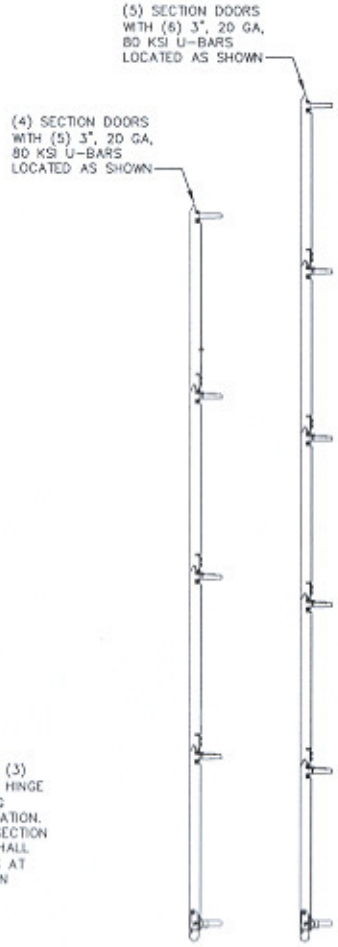

U-BAR ATTACHMENT NOTES

ALL U-BARS AT SECTION JOINTS SHALL HAVE (3) #12-14x1/2" SELF TAPPING SCREWS AT EACH HINGE LOCATION AND (2) #12-14x1/2" SELF TAPPING SCREWS HALF WAY BETWEEN EACH HINGE LOCATION. U-BARS LOCATED ON THE TOP OF THE TOP SECTION AND THE BOTTOM OF THE BOTTOM SECTION SHALL HAVE (2) #12-14x1/2" SELF TAPPING SCREWS AT EACH STILE LOCATION AND HALF WAY BETWEEN EACH STILE LOCATION.

REVISIONS

3/4/08

MARK R. BARROW, PE
FLORIDA LICENSE NO. 57389

Wayne® Dalton

3395 ADDISON DRIVE
PENSACOLA, FLORIDA 32514
(850) 474-9890

STATIC PRESSURE RATINGS		APPROVED SIZES		SCALE: N.T.S.		SIZE: A
DESIGN (PSF):	+26.90/-30.80	MAX WIDTH:	9'-0"		DATE	NAME
TEST (PSF):	+40.35/-46.20	MAX HEIGHT:	8'-0"	DRAWN	1/18/08	GRT
IMPACT/CYCLIC RATED (YES/NO):	NO	MAX SECTION HEIGHT:	21"	CHECKED	2/27/08	MRB

MODEL 9300

SHEET 2 OF 2

WINDLOAD SPECIFICATION OPTION CODE 1400

DRAWING PART NO. 333508

REV. P