STATE OF TEXAS
JOSEPH H. DIXON, JR.
18627
LICENSED
PROFESSIONAL ENGINEER
12/4/12

REVISIONS			
REV	DESCRIPTION	DATE	APPROVAL
—	DRAWING RELEASE	11-14-02	DM
A	NOTE REVISIONS	4-16-04	DM
B	NOTE REVISIONS	6-17-09	CS

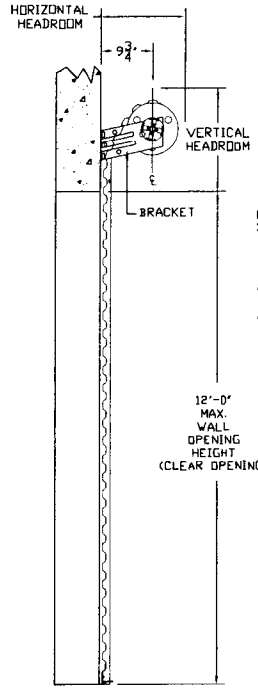

SIDE VIEW

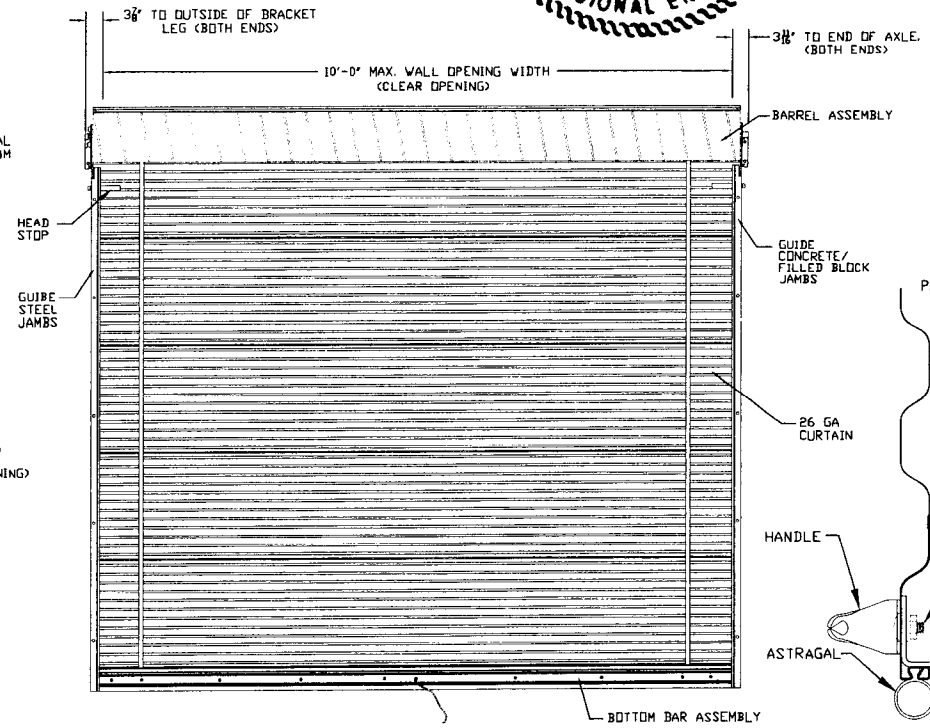

INSIDE ELEVATION

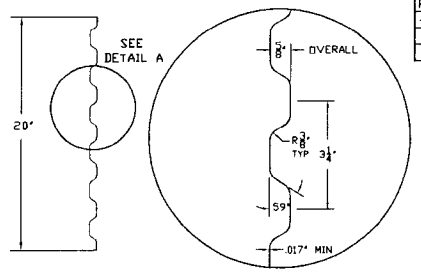

CURTAIN PANEL DETAIL A

ASTM A653 GR 80 ZINC COATED STEEL PRE-PAINTED WITH FULL COAT OF PRIMER AND BAKED SILICONIZED POLYESTER FINISH COAT

26 GA CURTAIN DETAIL

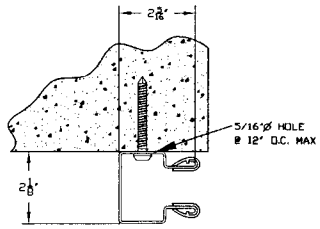

CONCRETE/FILLED BLOCK JAMBS

USING 5/16" X 2-1/4" TAPCON XL

ALL COMPONENTS SHALL BE ASTM A653 STEEL W/MIN FY=33 KSI GALVANIZED PER ASTM A653 G-90

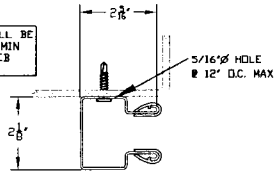

STEEL JAMBS

USING #12-14 X 1" TEKS PANCAKE HEAD

16 GA (.063) GUIDE MOUNTING DETAIL

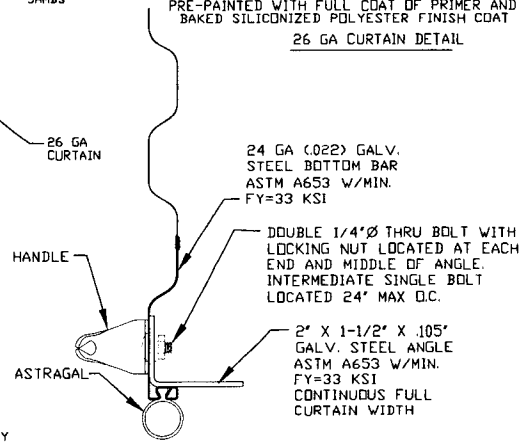

BOTTOM BAR ASSEMBLY

OPENING HEIGHT	VERTICAL HEADROOM	HORIZONTAL HEADROOM
THRU 7'-4"	15-1/2"	17-1/2"
OVER 7'-4" THRU 8'-8"	16"	18"
OVER 8'-8" THRU 10'-0"	17"	18-1/4"

HEADROOM REQUIRED

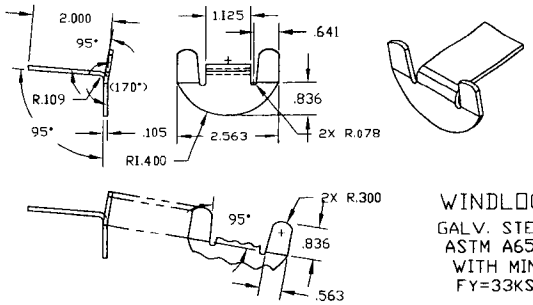

WINDLOCK
GALV. STEEL, ASTM A653 WITH MIN. FY=33KSI

THESE CONFIDENTIAL DOCUMENTS SUBMITTED BY JANUS CONTAIN INFORMATION OF A PROPRIETARY NATURE AND MAY NOT BE REPRODUCED OR USED TO MANUFACTURE ANYTHING IN PART OR IN WHOLE FOR ANY PURPOSE OTHER THAN THAT WHICH IS NECESSARY FOR PREPARATION OF BIDS OF ENGINEERING WITHOUT THE EXPRESS PERMISSION OF JANUS WHICH MAY RECALL DOCUMENTS AT ANY TIME.

UNLESS OTHERWISE SPECIFIED DIMENSIONS ARE IN INCHES AND TOLERANCES ARE:

DECIMAL		FRACTIONS	ANGLES	HOLE DIAMETERS	
.XX	±.03	± 1/16	± 0° 30'	UNDER .251	+.004 -.003
.XXX	±.005			.251 to .500	+.006 -.003
				OVER .500	+.008 -.003

PART NUMBER:
MATERIAL:
APPLIED FINISH:
UNIT OF MEASURE:

APPROVALS	DATE
DRAWN: BECKY NELSON	11-14-02
CHECKED: DON MILLS	11-14-02
APPROVED: DON MILLS	11-14-02

JANUS INTERNATIONAL CORPORATION
134 JANUS INTERNATIONAL BLVD TEMPLE, GA 30179
770-562-2850/Fax 770-562-2264
© 2012 Janus International Corporation All Rights Reserved

CERTIFIED WIND LOAD RATED
26 GA SERIES 750 DOOR ASSEMBLY
MAX. SIZE 10'-0" X 12'-0"

SIZE: B | DRAWING NUMBER: T1003 | REV: B
SCALE: NONE | SHEET: 1 OF 2

STATE OF TEXAS
JOSEPH H. DIXON, JR.
18627
LICENSED
PROFESSIONAL ENGINEER
12/4/12

REVISIONS			
REV	DESCRIPTION	DATE	APPROVAL
—	DRAWING RELEASE	11-14-02	DM
A	NOTE REVISIONS	4-16-04	DM
B	NOTE REVISIONS	6-17-09	CS

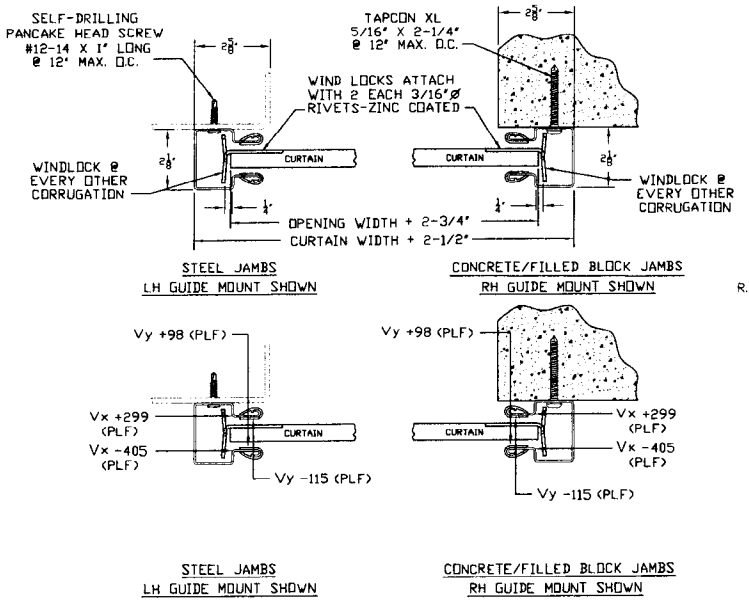

SUPERIMPOSED LOAD DIAGRAM

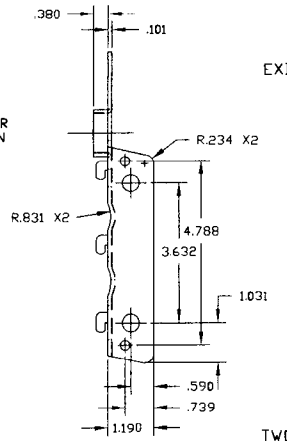

REAR VIEW

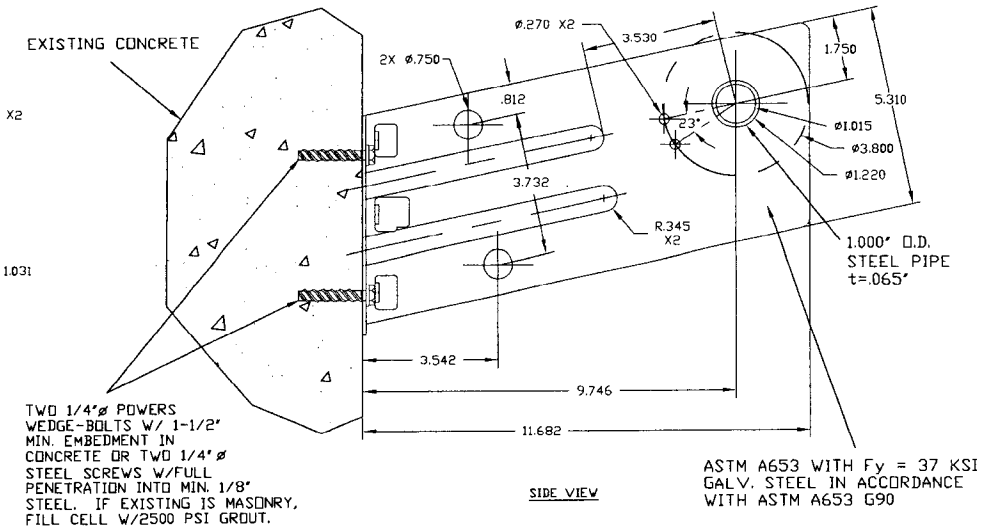

SIDE VIEW

DOOR MOUNTING BRACKET DETAIL

GENERAL NOTES

1. THIS ROLL-UP DOOR SYSTEM IS DESIGNED IN ACCORDANCE WITH THE FLORIDA BUILDING CODE.
2. THIS ROLL-UP DOOR HAS BEEN TESTED IN ACCORDANCE WITH ASTM E-330 AND COMPLIES WITH ANSI/DASMA 108.

   DESIGN LOAD $= {}^{+19.4}_{-22.7}$ PSF

3. WIND LOADS FOR BUILDING OPENINGS SHALL BE DETERMINED BY A PROFESSIONAL ENGINEER USING APPROPRIATE WIND SPEED AND DESIGN CRITERIA. THIS DOOR MAY BE USED WHERE THE DESIGN LOAD MEETS OR EXCEEDS THE DESIGN LOAD FOR THE BUILDING OPENING.
4. SUPERIMPOSED LOADS ON THE JAMBS FROM THIS DOOR ARE DESIGNED AS Vx AND Vy HEREIN. CONTRACTORS SHALL HAVE BUILDING ENGINEER VERIFY ADEQUACY OF BUILDING STRUCTURE TO RESIST SUPERIMPOSED LOADS Vx, Vy AND BRACKET LOADS SHOWN.
5. ALL WELDING SHALL BE PERFORMED BY QUALIFIED WELDERS IN ACCORDANCE WITH A.W.S. SPECIFICATIONS, LATEST EDITION. ALL WELDING ELECTRODES SHALL CONFORM TO A.W.S. A5.1 GRADE E-70.
6. DOORS SHALL BE PROVIDED WITH LOCK MECHANISMS AT THE OPTION OF THE OWNER.
7. ALL BOLTS AND WASHERS SHALL BE GALVANIZED OR STAINLESS STEEL WITH A MINIMUM TENSILE STRENGTH OF 60 KSI.
8. DESIGN BASED ON CERTIFIED TESTING LABORATORIES, INC., TEST REPORT NO. CTLA - 983W-3
9. ANCHOR NOTES:
   A. EMBEDMENT LENGTH DOES NOT INCLUDE STUCCO FINISH.
   B. FOR HOLLOW MASONRY, FILL ALL CELLS @ ANCHOR WITH 2500 PSI GROUT.
   C. ANCHORS SHALL BE INSTALLED IN ACCORDANCE WITH MANUFACTURER'S SPECIFICATIONS.
10. DOOR OPERATION TYPE TO BE PUSH-UP.
11. GUIDE TO JAMB ATTACHMENT FASTENERS BEGIN 4" FROM FLOOR AND END 3-1/2" BELOW TOP OF WALL OPENING.
12. TEST DOOR WALL OPENING SIZE: 10'-0" x 8'-0".

THESE CONFIDENTIAL DOCUMENTS SUBMITTED BY JANUS CONTAIN INFORMATION OF A PROPRIETARY NATURE AND MAY NOT BE REPRODUCED OR USED TO MANUFACTURE ANYTHING IN PART OR IN WHOLE FOR ANY PURPOSE OTHER THAN THAT WHICH IS NECESSARY FOR PREPARATION OF BIDS OF ENGINEERING WITHOUT THE EXPRESS PERMISSION OF JANUS WHICH MAY RECALL DOCUMENTS AT ANY TIME.

UNLESS OTHERWISE SPECIFIED DIMENSIONS ARE IN INCHES AND TOLERANCES ARE:

DECIMAL		FRACTIONS	ANGLES	HOLE DIAMETERS	
.XX	±.03	± 1/16	± 0° 30'	UNDER .251	+.004 -.003
.XXX	±.005			.251 to .500	+.006 -.003
				OVER .500	+.008 -.003

PART NUMBER:
MATERIAL:
APPLIED FINISH:
UNIT OF MEASURE:

APPROVALS	DATE
DRAWN: BECKY NELSON	11-14-02
CHECKED: DON MILLS	11-14-02
APPROVED: DON MILLS	11-14-02

JANUS INTERNATIONAL CORPORATION
134 JANUS INTERNATIONAL BLVD TEMPLE, GA 30179
770-562-2850/Fax 770-562-2264
© 2012 Janus International Corporation All Rights Reserved

CERTIFIED WIND LOAD RATED
26 GA SERIES 750 DOOR ASSEMBLY
MAX. SIZE 10'-0" X 12'-0"

SIZE: B | DRAWING NUMBER: T1003 | REV: B
SCALE: NONE | SHEET: 2 OF 2