Southern Yellow Pine specific gravity = 0.55; allowable load per anchor = 577 lbs.
Spruce Pine Fir specific gravity = 0.42; allowable load per anchor = 385 lbs.

Lag screw: 3/8" diameter x 3" long minimum; must conform to ANSI/ASME B18.2.1
Use longer lag screws as required to insure 1-1/2" minimum embedment required, when applying back jambs over dry wall or other non structural wall covering.
Washer: 1-1/8" O.D. minimum (3/8"I.D.); must conform to ANSI B18.22.1 type A.

Pre-drill 1/4" diameter pilot holes for lag screw insertion.
1-1/2" minimum lag screw edge distance required.

Maximum spacing shown in chart.
Lesser spacing may be used to avoid interference with door component system.
Spring pad connection not included.
Maximum load per jamb = maximum positive pressure times door height times door width divided by 2.

		Maximum Fastener On-Center Spacing	
Door Width	Maximum Positive Pressure	Southern Yellow Pine	Spruce Pine Fir
9	44.3 psf	24	24
	50.7 psf	24	21
	62.7 psf	24	16
10	38.7 psf	24	24
	44.3 psf	24	21
	50.7 psf	24	19
	62.7 psf	22	15
12	32.2 psf	24	24
	36.9 psf	24	21
	42.2 psf	24	18
	54.4 psf	21	14

		Maximum Fastener On-Center Spacing	
Door Width	Maximum Positive Pressure	Southern Yellow Pine	Spruce Pine Fir
16	22.2 psf	24	24
	26.2 psf	24	22
	30.1 psf	24	19
	34.5 psf	24	17
	39.5 psf	22	15
	42.1 psf	21	14
	48.2 psf	18	12
	61.9 psf	14	9
18	22.2 psf	24	24
	26.2 psf	24	20
	30.1 psf	24	17
	34.5 psf	22	15
	39.5 psf	19	13
	42.1 psf	18	12
	48.2 psf	16	11
	61.9 psf	12	8

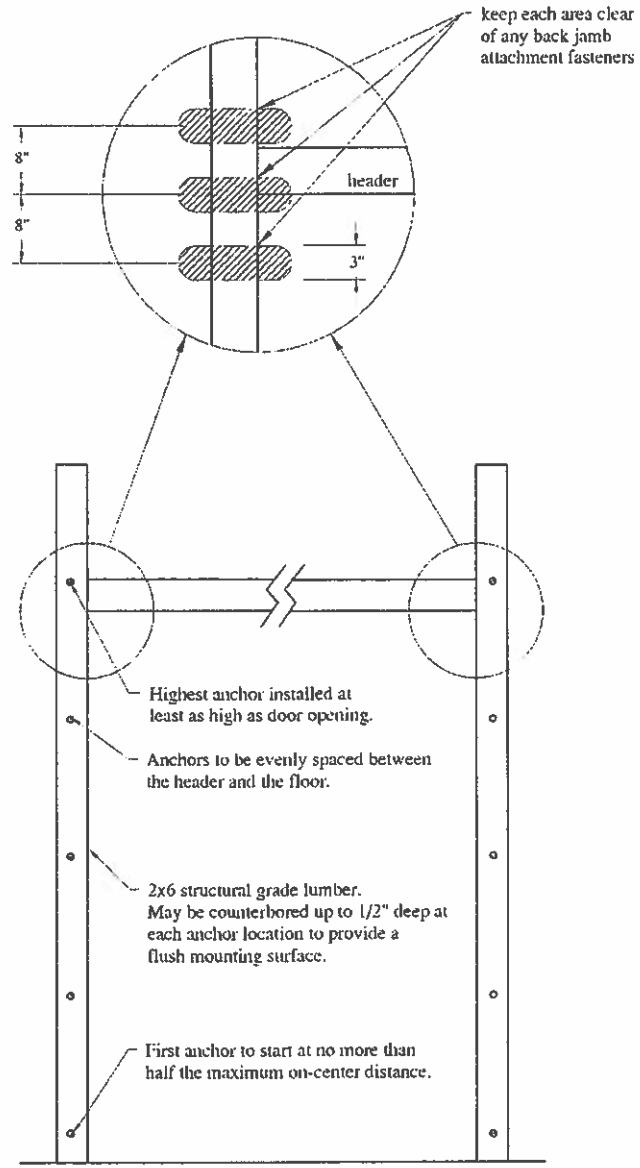

Alternative design may be approved by a registered professional engineer.
Supporting structural elements must be designed by a registered professional engineer for wind loads in addition to other loads.
Calculation reference: DASMA TDS #161E and 2005 AF&PA NDS for Wood Construction.

STATE OF TEXAS
JOHN E. SCATES
56308

John E Scates
7/27/10

John E. Scates, P.E.
3121 Fairgate Drive
Carrollton, Texas 75007
TXPE 56308, F-2203

Professional Engineer's seal provided only for verification of windload construction details

C.H.I. OVERHEAD DOORS

SCALE none
DATE 7-26-2010

Back Jamb Attachment Detail
Lag Screw

C.H.I. Drawing: BJA-004-05