2000 psi minimum poured concrete wall.
Southern Yellow Pine specific gravity = 0.55; allowable load per anchor = 364 lbs.
Spruce Pine Fir specific gravity = 0.42; allowable load per anchor = 274 lbs.
Anchor: 3/8" dia x 3-1/2" long Simpson Strong-Tie Wedge-All.
Washer: 7/8" O.D. / 7/16" I.D. min; must conform to ANSI B18.22.1 type A.
3" minimum anchor edge distance required.
1-3/4" minimum embedment required.
Maximum spacing shown in chart. Lesser spacing may be used to avoid interference with door component system.
Spring pad connection not included.
Maximum load per jamb = 0.5 x door width x max positive pressure x door height

		Maximum Fastener On-Center Spacing	
Door Width	Maximum Positive Pressure	Southern Yellow Pine*	Spruce Pine Fir*
9	31.4 psf	24	24
	36.0 psf	24	20
	38.7 psf	24	19
	44.3 psf	22	16
	50.7 psf	19	14
	62.7 psf	15	12
10	27.3 psf	24	24
	31.4 psf	24	21
	36.0 psf	24	18
	38.7 psf	23	17
	44.3 psf	20	15
	50.7 psf	17	13
	62.7 psf	14	10
12	22.7 psf	24	24
	26.1 psf	24	21
	30.0 psf	24	18
	32.2 psf	23	17
	36.9 psf	20	15
	42.2 psf	17	13
	52.2 psf	14	10

		Maximum Fastener On-Center Spacing	
Door Width	Maximum Positive Pressure	Southern Yellow Pine*	Spruce Pine Fir*
16	15.3 psf	24	24
	18.7 psf	24	22
	22.2 psf	24	19
	26.2 psf	21	16
	30.1 psf	18	14
	34.5 psf	16	12
	39.5 psf	14	10
	42.1 psf	13	10
	48.2 psf	11	9
	61.9 psf	9	7
18	15.3 psf	24	24
	18.7 psf	24	20
	22.2 psf	22	16
	26.2 psf	19	14
	30.1 psf	16	12
	34.5 psf	14	11
	42.1 psf	12	9
	48.2 psf	10	8
	61.9 psf	8	6

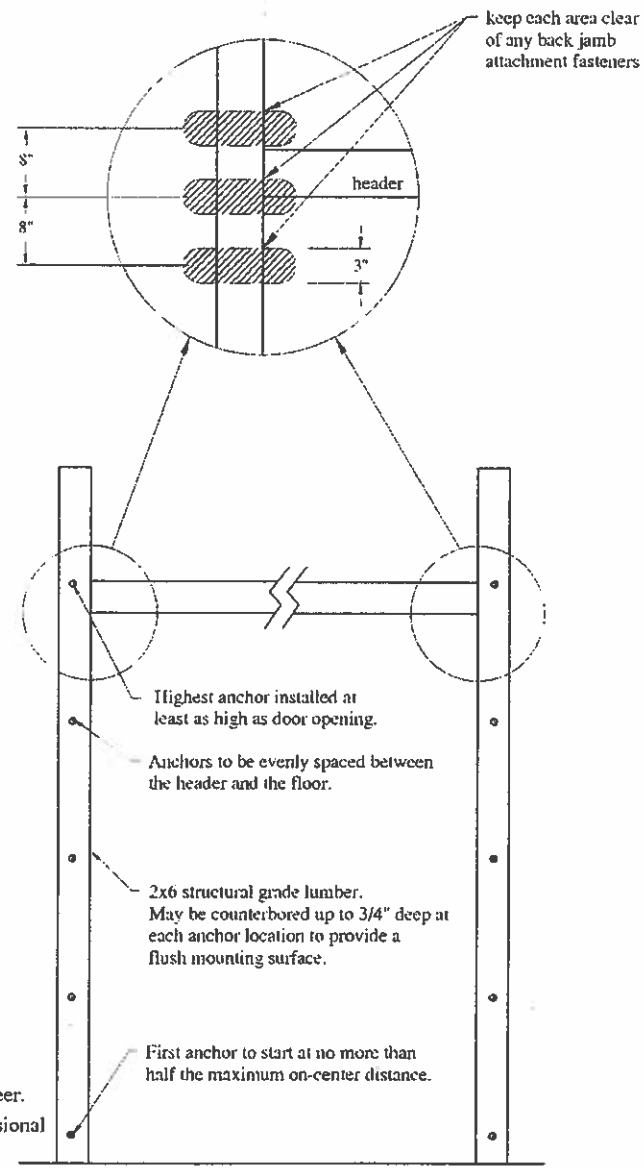

* 2000 psi minimum poured concrete wall. Wood back jamb material is the limiting factor in faster specification.

Alternative design may be approved by a registered professional engineer.
Supporting structural elements shall be designed by a registered professional engineer for wind loads in addition to other loads.
Calculation reference: DASMA TDS #161C, 2005 AF&PA NDS for Wood Construction and Simpson Strong-Tie data.

John E. Scates 7/27/10

John E. Scates, P.E.
3121 Fairgate Drive
Carrollton, Texas 75007
TXPE 56308, F-2203

STATE OF TEXAS
JOHN E. SCATES
56308

Professional Engineer's seal provided only for verification of windload construction details

C.H.I. OVERHEAD DOORS

SCALE none
DATE 2-24-2010

Back Jamb Attachment Detail
Concrete Expansion Anchor

C.H.I. Drawing: BJA-003-04