2000 psi minimum poured concrete wall; allowable load per anchor = 280 lbs.
Grout-filled (min 2000 psi concrete) C90 block; allowable load per anchor = 154 lbs.
Southern Yellow Pine specific gravity = 0.55
Spruce Pine Fir specific gravity = 0.42
Anchor: 1/4" dia x 3" long ITW Ramset / Redhead Tapcon.
Washer: 1" O.D. min / 5/16" I.D. max; must conform to ANSI B18.22.1 type B.
2-1/2" minimum lag screw edge distance required.
1-1/2" minimum embedment required.
Maximum spacing shown in chart. Lesser spacing may be used to avoid interference with door component system.
Spring pad connection not included.
Maximum load per jamb = 0.5 x door width x max positive pressure x door height

Door Width	Maximum Positive Pressure	Maximum Fastener On-Center Spacing	
		C-90 Block *	2000 PSI Concrete *
9	15.9 psf	24	24
	19.5 psf	21	24
	23.2 psf	18	24
	27.3 psf	15	24
	31.4 psf	13	24
	36.0 psf	11	21
	38.7 psf	11	19
	44.3 psf	9	17
	50.7 psf	8	15
	62.7 psf	7	12
10	15.9 psf	24	24
	19.5 psf	19	24
	23.2 psf	16	24
	27.3 psf	14	24
	31.4 psf	12	21
	36.0 psf	10	19
	38.7 psf	10	17
	44.3 psf	8	15
	50.7 psf	7	13
	62.7 psf	6	11

Door Width	Maximum Positive Pressure	Maximum Fastener On-Center Spacing	
		C-90 Block *	2000 PSI Concrete *
16	12.4 psf	19	24
	15.3 psf	15	24
	18.7 psf	12	22
	22.2 psf	10	19
	26.2 psf	9	16
	30.1 psf	8	14
	34.5 psf	N/A	12
	39.5 psf	N/A	11
	42.1 psf	N/A	10
	48.2 psf	N/A	9
	61.9 psf	N/A	N/A
18	12.4 psf	17	24
	15.3 psf	13	24
	18.7 psf	11	20
	22.2 psf	9	17
	26.2 psf	8	14
	30.1 psf	N/A	12
	34.5 psf	N/A	11
	39.5 psf	N/A	9
	42.1 psf	N/A	9
	48.2 psf	N/A	8
	61.9 psf	N/A	N/A

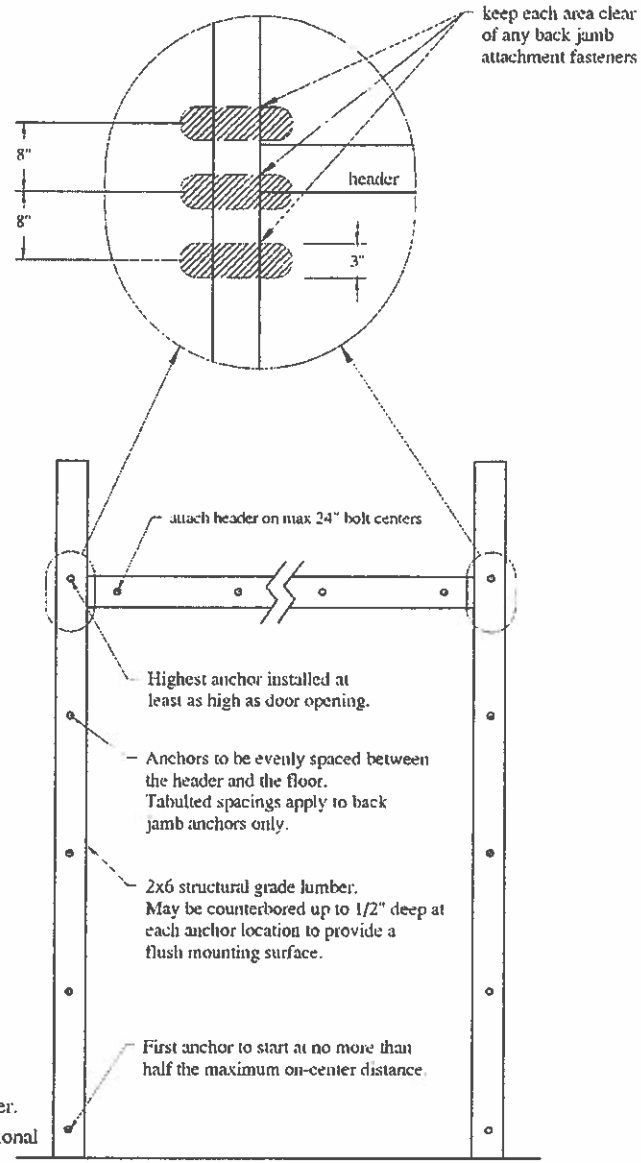

* 2000 psi minimum poured concrete wall. Wood back jamb material is the limiting factor in faster specification.

Alternative design may be approved by a registered professional engineer.
Supporting structural elements shall be designed by a registered professional engineer for wind loads in addition to other loads.
Calculation reference: DASMA TDS #161A, 2005 AF&PA NDS for Wood Construction and ITW Ramset / Redhead data.

STATE OF TEXAS
JOHN E. SCATES
56308

John E Scates
7/27/10

John E. Scates, P.E.
3121 Fairgate Drive
Carrollton, Texas 75007
TXPE 56308, F-2203

Professional Engineer's seal provided only for verification of windload construction details

C.H.I. OVERHEAD DOORS

SCALE none
DATE 2-24-2010

Back Jamb Attachment Detail
Self-Tapping Concrete Anchor

C.H.I. Drawing: BJA-002-05