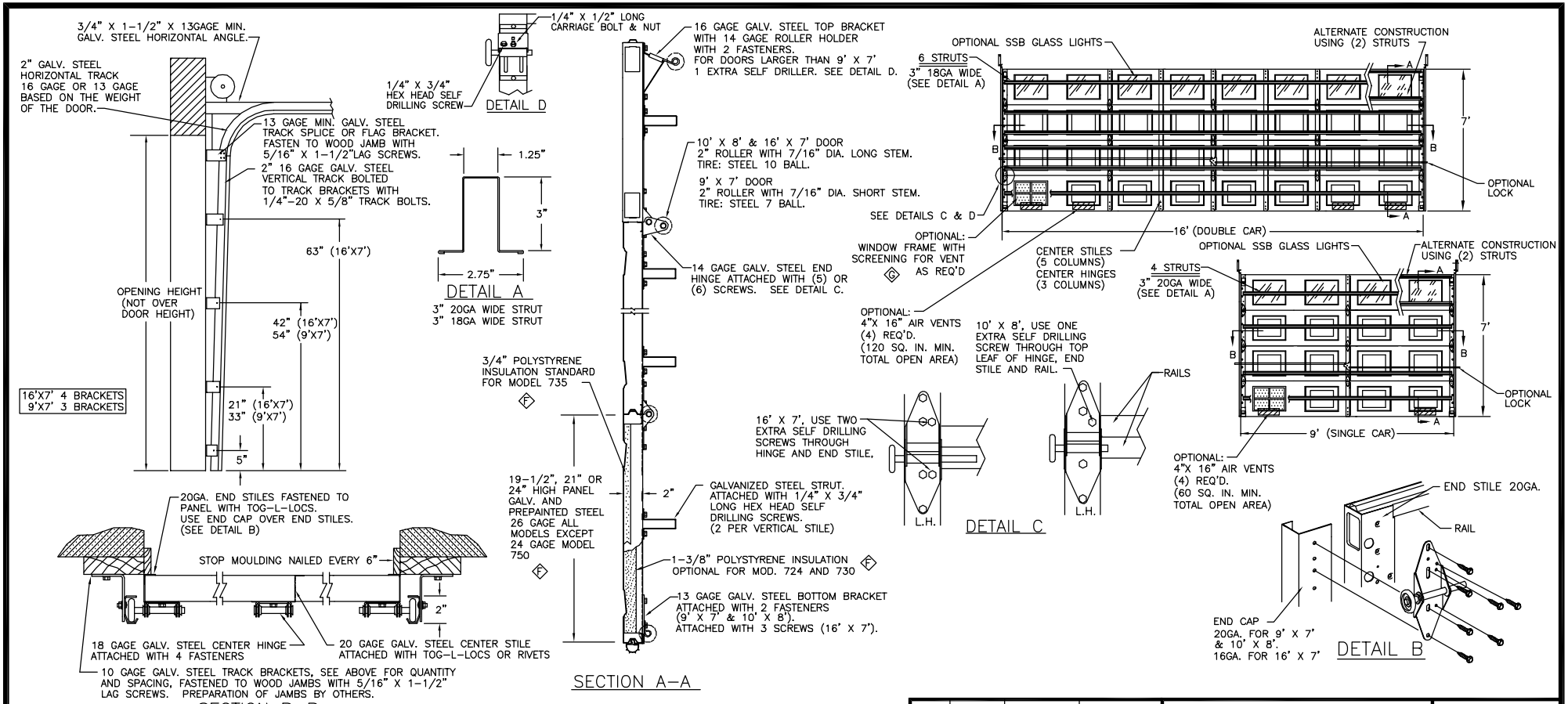

	P.S.F. TABLE				
DOOR SIZE		DESIGN PRESSURE		TEST PRESSURE	
WIDTH	HEIGHT	POSITIVE	NEGATIVE	POSITIVE	NEGATIVE
8'-0"	7'-0"	+32.8	-37.4	+49.2	-56.1
9'-0"	7'-0"	+29.1	-33.3	+43.7	-49.9
16'-0"	7'-0"	+27.7	-31.2	+41.8	-47.0

NOTE: UNLESS SPECIFIED OTHERWISE, ALL FASTENERS ARE 1/4"-14 X 1/2" HEX HEAD SHEET METAL SCREWS OR 1/4"-20 X 5/8" HEX BOLTS AND NUTS.

John E Scates PE
Florida Reg. #51737
1411 LeMay #205
Carrollton, TX 75007
(972)466-0550

DOORS SHOWN ON THIS DRAWING HAVE BEEN DEMONSTRATED TO WITHSTAND THE PRESSURES LISTED IN THE TABLE ABOVE. IBC ASSUMPTIONS: 130 MPH, 15' ROOF HEIGHT, ROOF PITCH > 10°, DOOR FULLY IN END ZONE. FBC ASSUMPTIONS: 130 MPH, EXPOSURE "B", 30' ROOF HEIGHT, ROOF PITCH > 10°, 2' OF DOOR IN END ZONE. F

AN ARCHITECT OR STRUCTURAL ENGINEER MUST DETERMINE IF THE DOOR IS SUITABLE FOR OTHER LOCATIONS.
DOORS SMALLER THAN THOSE SHOWN WILL WITHSTAND THE INCREASED PRESSURE LOADS, GIVEN THE SAME CONDITIONS. THE INCREASE IN DOOR STRENGTH IS GREATER THAN THE INCREASE IN PRESSURE AS THE DOOR SIZE IS MADE NARROWER OR SHORTER.

F NOTE: GLAZING & OPTIOAL WINDOW VENTS DO NOT SATISFY IMPACT DEBRIS REQUIREMENTS IN FBC

REV.	E.C.N.	DATE	APPROV.
i	2684	10/20/04	RLB
H	2613	11/17/03	KDD
G	2581	8/11/03	KDD
F	2422	3/5/02	KDD
E	2413	1/25/02	
D	2137	2/9/00	
C	1549A		
B	1549		
A	1449	(9-8-95)	(Robertson)
	1413	(3-10-95)	(Robertson)

WINDSOR REPUBLIC DOORS
P.O. BOX 8915
LITTLE ROCK, AR
72219-8915
(501) 562-1872

MODELS: 724, 426, 730, 735, 750, 800, 755, 765 E I

DWG. WAS 101993-10

TOLERANCE: FRAC. ± 1/64" DEC. ± .015 ANG. ± 1°

PART NAME: F
WINDLOAD RESIDENTIAL STEEL DOOR FOR IBC 130 MPH, FBC 130 MPH EXPOSURE "B"

NEXT LEVEL

DATE: 3/10/95

DWG. NO. 99-B-034

SCALE NONE

PLOT SCALE 1=1

DRN. BY GDR

SHEET 1 OF 3

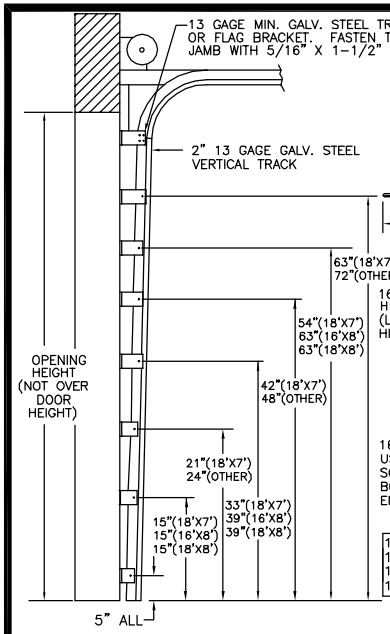

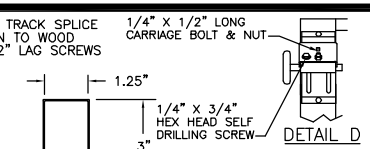

DETAIL A

10' X 8'
USE ONE EXTRA SELF DRILLING SCREW THROUGH TOP LEAF OF HINGE AND END STILE.

63"(18'X7') 3" 18GA WIDE STRUT
72"(OTHER) 3" 20GA WIDE STRUT

16' X 8', 18' X 7' & 18' X 8' HURRICANE ROLLERS (LONG STEM MADE WITH HIGH STRENGTH STEEL)

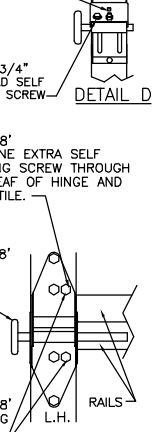

16' X 8', 18' X 7' & 18' X 8' USE TWO EXTRA SELF DRILLING SCREWS THROUGH TOP AND BOTTOM LEAF OF HINGE AND END STILE.

DETAIL C

10' X 8' (4 BRACKETS)
16' X 8' (7 BRACKETS)
18' X 7' (7 BRACKETS)
18' X 8' (7 BRACKETS)

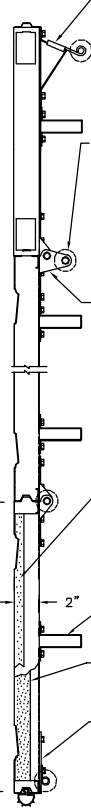

16 GAGE GALV. STEEL TOP BRACKET WITH 14 GAGE ROLLER HOLDER WITH 2 FASTENERS. FOR DOORS LARGER THAN 9' X 7' 1 EXTRA SELF DRILLER. SEE DETAIL D. 18' X 7' & 18' X 8' USES TOP BRACKET ON SHEET 3.

16' X 8', 18' X 7' & 18' X 8' DOORS 2" HURRICANE ROLLER WITH 7/16" DIA. LONG STEM. TIRE: STEEL 10 BALL.

10' X 8' DOORS 2" ROLLER WITH 7/16" DIA. LONG STEM. TIRE: STEEL 10 BALL

14 GAGE GALV. STEEL END HINGE ATTACHED WITH (6) SCREWS. SEE DETAIL C.

3/4" POLYSTYRENE INSULATION STANDARD FOR MODEL 735 (F)

GALVANIZED STEEL STRUT. ATTACHED WITH 1/4" X 3/4" LONG HEX HEAD SELF DRILLING SCREWS. (2 PER VERTICAL STILE)

1-3/8" POLYSTYRENE INSULATION OPTIONAL FOR MOD. 724 AND 730 (F)

13 GAGE GALV. STEEL BOTTOM BRACKET ATTACHED WITH 4 FASTENERS.

SECTION A-A

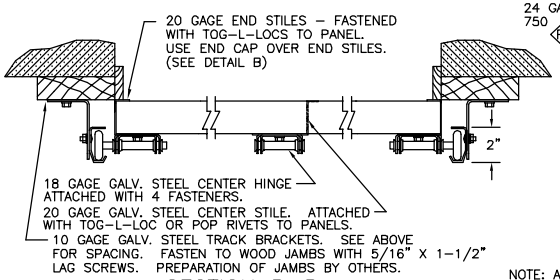

SECTION B-B

NOTE: ALL NON-DESCRIPTIVE FASTENERS SHOWN TO BE 1/4"-20 X 5/8" HEX BOLTS & NUTS OR 1/4" X 1/2" LONG HEX HEAD SHEET METAL SCREWS.

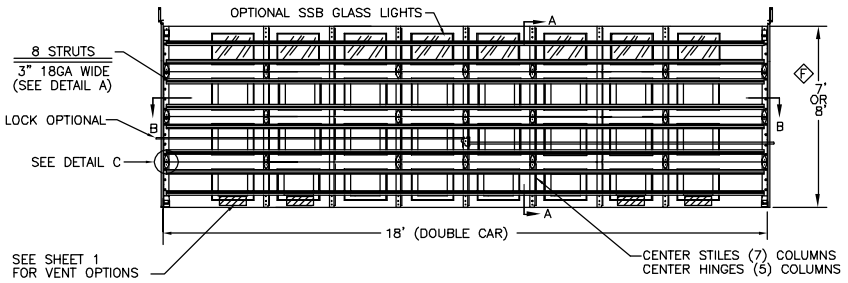

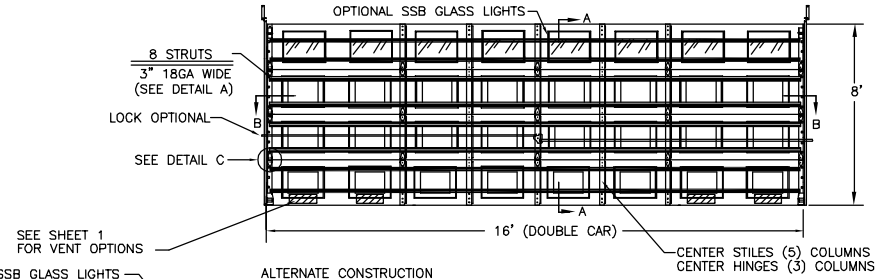

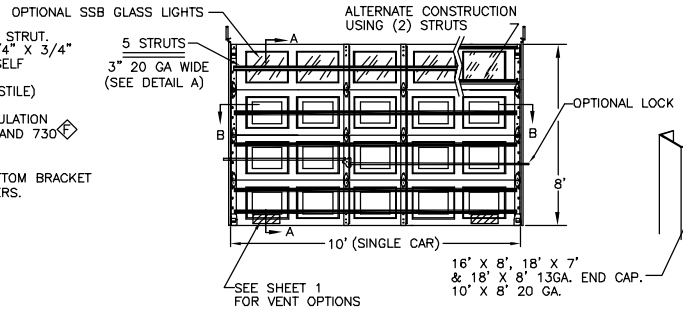

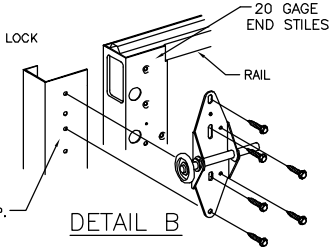

DETAIL B

P.S.F. TABLE					
DOOR SIZE		DESIGN PRESSURE		TEST PRESSURE	
WIDTH	HEIGHT	POSITIVE	NEGATIVE	POSITIVE	NEGATIVE
10'-0"	8'-0"	+26.0	-30.0	+40.0	-45.0
16'-0"	8'-0"	+34.6	-38.8	+51.9	-58.3
18'-0"	8'-0"	+27.3	-30.7	+41.0	-46.0
18'-0"	7'-0"	+27.3	-30.7	+41.0	-46.0

John E Scates PE
Florida Reg. #51737
1411 LeMay #205
Carrollton, TX 75007
(972)466-0550

DOORS SHOWN ON THIS DRAWING HAVE BEEN DEMONSTRATED TO WITHSTAND THE PRESSURES LISTED IN THE TABLE ABOVE. IBC ASSUMPTIONS: 130 MPH, 15' ROOF HEIGHT, ROOF PITCH > 10°, DOOR FULLY IN END ZONE. FBC ASSUMPTIONS: 130 MPH, EXPOSURE "B", 30' ROOF HEIGHT, ROOF PITCH > 10°, 2' OF DOOR IN END ZONE. (F)

AN ARCHITECT OR STRUCTURAL ENGINEER MUST DETERMINE IF THE DOOR IS SUITABLE FOR OTHER LOCATIONS.
DOORS SMALLER THAN THOSE SHOWN WILL WITHSTAND THE INCREASED PRESSURE LOADS, GIVEN THE SAME CONDITIONS. THE INCREASE IN DOOR STRENGTH IS GREATER THAN THE INCREASE IN PRESSURE AS THE DOOR SIZE IS MADE NARROWER OR SHORTER.

(F) NOTE: GLAZING & OPTIOAL WINDOW VENTS DO NOT SATISFY IMPACT DEBRIS REQUIREMENTS IN FBC

REV.	E.C.N.	DATE	APPROV.
i	2684	10/20/04	RLB
H	2613	11/17/03	KDD
G	2581	8/11/03	KDD
F	2422	3/5/02	KDD
E	2413	1/25/02	
D	2137	2/9/00	
C	1549A		
B	1549		
A	1449	(9-8-95)	(Robertson)
	1413	(8-10-95)	(Robertson)

WINDSOR REPUBLIC DOORS

P.O. BOX 8915
LITTLE ROCK, AR
72219-8915
(501) 562-1872

MODELS: 724, 426, 730, 735, 750, 800, 755, 765 (E) (i)

DWG. WAS 101993-10

TOLERANCE FRAC. ± 1/64" DEC. ± .015 ANG. ± 1°

PART NAME: (F)
WINDLOAD RESIDENTIAL STEEL DOOR FOR IBC 130 MPH, FBC 130 MPH EXPOSURE "B"

NEXT LEVEL

DATE: 4/16/96

DWG. NO. 99-B-034

SCALE NONE

PLOT SCALE

DRN. BY B. HARRIS

SHEET 2 OF 3

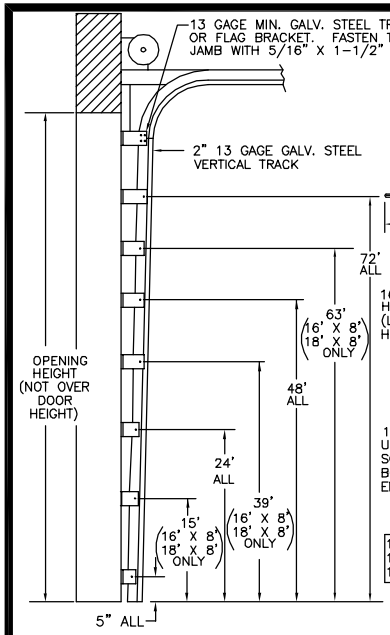

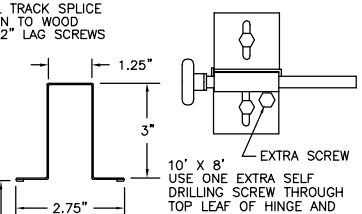

DETAIL A
3" 18GA WIDE STRUT

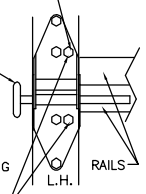

DETAIL C

10' X 8' (4 BRACKETS)
16' X 8' (7 BRACKETS)
18' X 8' (7 BRACKETS)

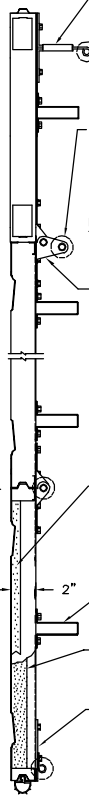

SECTION A-A

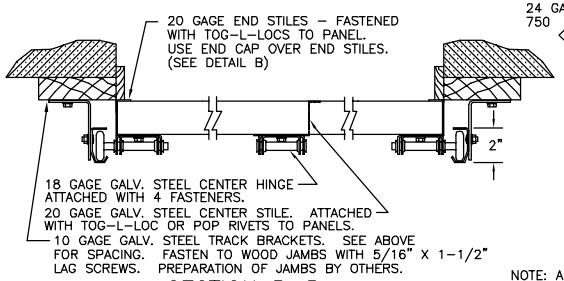

SECTION B-B

NOTE: ALL NON-DESCRIPTIVE FASTENERS SHOWN TO BE 1/4"-20 X 5/8" HEX BOLTS & NUTS OR 1/4" X 1/2" LONG HEX HEAD SHEET METAL SCREWS.

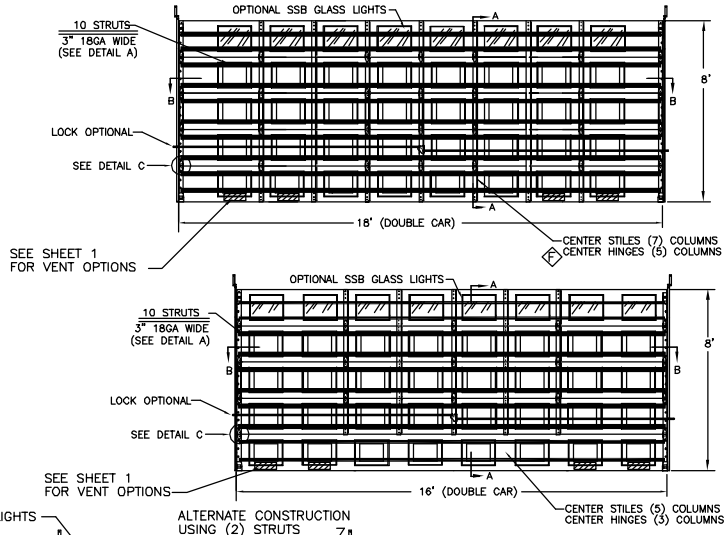

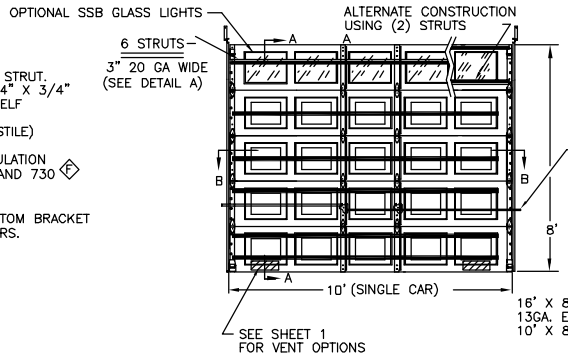

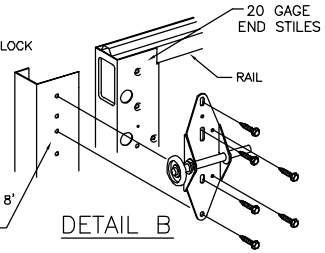

DETAIL B

P.S.F. TABLE					
DOOR SIZE		DESIGN PRESSURE		TEST PRESSURE	
WIDTH	HEIGHT	POSITIVE	NEGATIVE	POSITIVE	NEGATIVE
10'-0"	8'-0"	+26.0	-30.0	+40.0	-45.0
16'-0"	8'-0"	+34.6	-38.8	+51.9	-58.3
18'-0"	8'-0"	+27.3	-30.7	+41.0	-46.0

John E Scates PE
Florida Reg. #51737
1411 LeMay #205
Carrollton, TX 75007
(972)466-0550

DOORS SHOWN ON THIS DRAWING HAVE BEEN DEMONSTRATED TO WITHSTAND THE PRESSURES LISTED IN THE TABLE ABOVE. IBC ASSUMPTIONS: 130 MPH, 15' ROOF HEIGHT, ROOF PITCH > 10°, DOOR FULLY IN END ZONE. FBC ASSUMPTIONS: 130 MPH, EXPOSURE "B", 30' ROOF HEIGHT, ROOF PITCH > 10°, 2' OF DOOR IN END ZONE. (F)

AN ARCHITECT OR STRUCTURAL ENGINEER MUST DETERMINE IF THE DOOR IS SUITABLE FOR OTHER LOCATIONS.
DOORS SMALLER THAN THOSE SHOWN WILL WITHSTAND THE INCREASED PRESSURE LOADS, GIVEN THE SAME CONDITIONS. THE INCREASE IN DOOR STRENGTH IS GREATER THAN THE INCREASE IN PRESSURE AS THE DOOR SIZE IS MADE NARROWER OR SHORTER.

(F) NOTE: GLAZING & OPTIOAL WINDOW VENTS DO NOT SATISFY IMPACT DEBRIS REQUIREMENTS IN FBC

REV.	E.C.N.	DATE	APPROV.
i	2684	10/20/04	RLB
H	2613	11/17/03	KDD
G	2581	8/11/03	KDD
F	2422	3/5/02	KDD
E	2413	1/25/02	
D	2137	2/9/00	
C	1549A		
B	1549		
A	1449	(9-8-95)	(Robertson)
	1413	(3-10-95)	(Robertson)

WINDSOR REPUBLIC DOORS

P.O. BOX 8915
LITTLE ROCK, AR
72219-8915
(501) 562-1872

MODELS:
724, 426, 730, 735, 750, 800, 755, 765

DWG. WAS 101993-10

TOLERANCE
FRAC. ± 1/64"
DEC. ± .015
ANG. ± 1°

PART NAME: (F)
WINDLOAD RESIDENTIAL STEEL DOOR FOR IBC 130 MPH, FBC 130 MPH EXPOSURE "B"

NEXT LEVEL

DATE: 4/16/96

DWG. NO. 99-B-034

SCALE NONE

PLOT SCALE

DRN. BY B. HARRIS

SHEET 3 OF 3