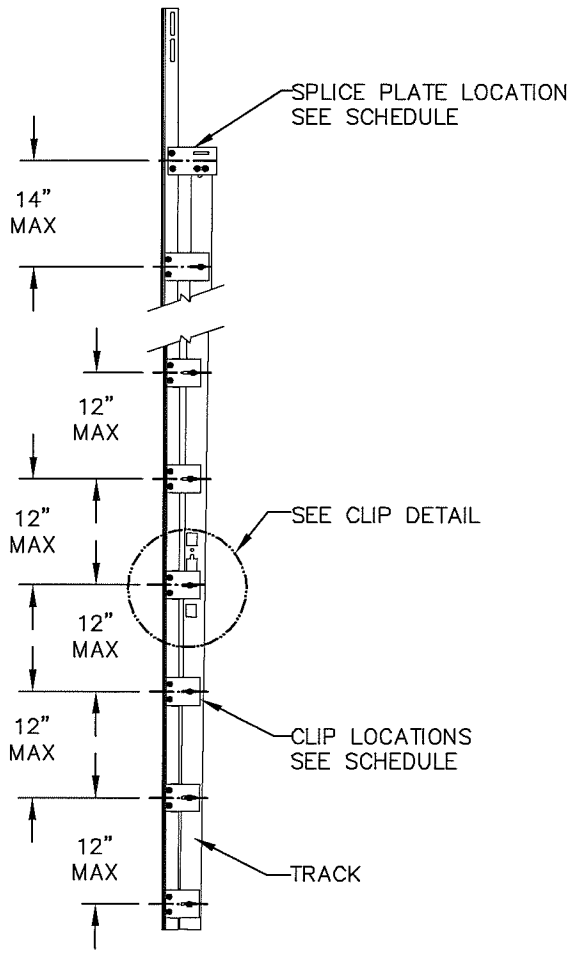

CLIPS TO BE EITHER RIVETED, BOLTED, OR WELDED. SEE DETAILS THIS PAGE.

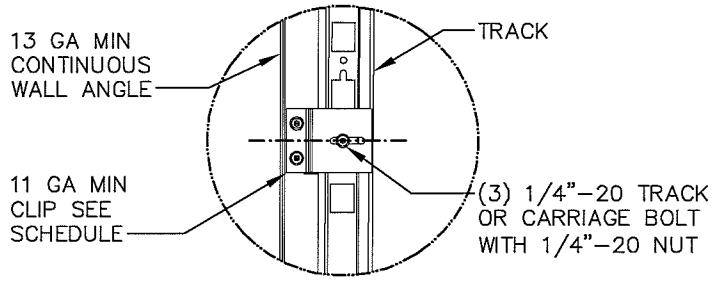

TYPICAL CLIP
BOLTING DETAIL

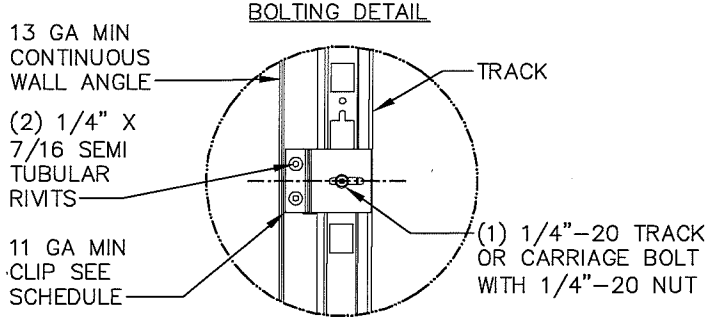

TYPICAL CLIP
RIVETING DETAIL

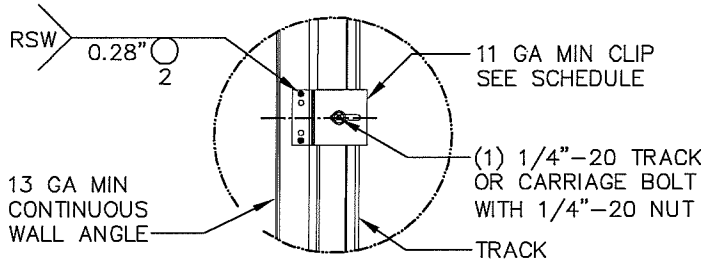

TYPICAL CLIP
WELDING DETAIL

DESIGN PRESSURE CHART	
MAX DOOR WIDTH	MAX PSF
9'-0"	+46.0 PSF/-52.0 PSF
16'-0"	+46.0 PSF/-52.0 PSF
18'-0"	+46.0 PSF/-52.0 PSF

REVISIONS

P2 2 INCH TRACK-CLIPS-TEXAS WALL ANGLE 12 FOOT UPDATED
BPJ 6/11/03

P3 UPDATED FORMAT. INCREASED ALLOWABLE PRESSURES TO +46.00/-52.00 PSF FOR ALL DOOR WIDTHS. CHANGED "TEXAS WALL ANGLE" TO "CONTINUOUS WALL ANGLE". ADDED SUBSTRATE MOUNTING DETAIL, CHANGED TO TITEN HD ANCHORS
GRT 4/2/07

P4 CHANGED FORMAT. ADDED MODELS 9800 AND 8024 WITH OVERLAY TO TRACK CLIP SCHEDULE.
GRT 8/21/07

P5 UPDATED MODELS LISTED IN CHARTS. UPDATED SPLICE & CLIP SCHEDULES.
DLP 9/06/07

P6 UPDATE MOUNTING DETAIL DRAWINGS.
GRT 10/05/07

P7 UPDATED CHARTS TO ELIMINATE THE USE OF THE #8 CLIP (REPLACED WITH #9 ACROSS THE BOARD).
DLP 10/24/07

P8 UPDATED STEEL MOUNTING DETAIL
MRB 04/11/08

P9 EXPANDED 1-1/2" TO 1-3/8" DOOR THICKNESS CHART UP TO 14' HIGH.
GRT 12/11/08

P10 UPDATED TITLE BLOCK
GRT 6/2/10

JOHN E. SCATES, PE
3121 FAIRGATE DR.
CARROLLTON, TX 75007
FL PE 51737 TX PE 56308/F2203

7/11/13

PROFESSIONAL ENGINEER'S SEAL PROVIDED ONLY FOR VERIFICATION OF WINDLOAD CONSTRUCTION DETAILS.

STATE OF TEXAS
JOHN E. SCATES
56308
REGISTERED PROFESSIONAL ENGINEER

TRACK SUPPLEMENT CHART

Wayne® Dalton
3395 ADDISON DRIVE
PENSACOLA, FLORIDA 32514
(850) 474-9890

	DATE	NAME
DRAWN	8/21/07	GRT
CHECKED	8/21/07	MRB
SHEET 1 OF 2		
DRAWING PART NO.		REV.
307494		P10

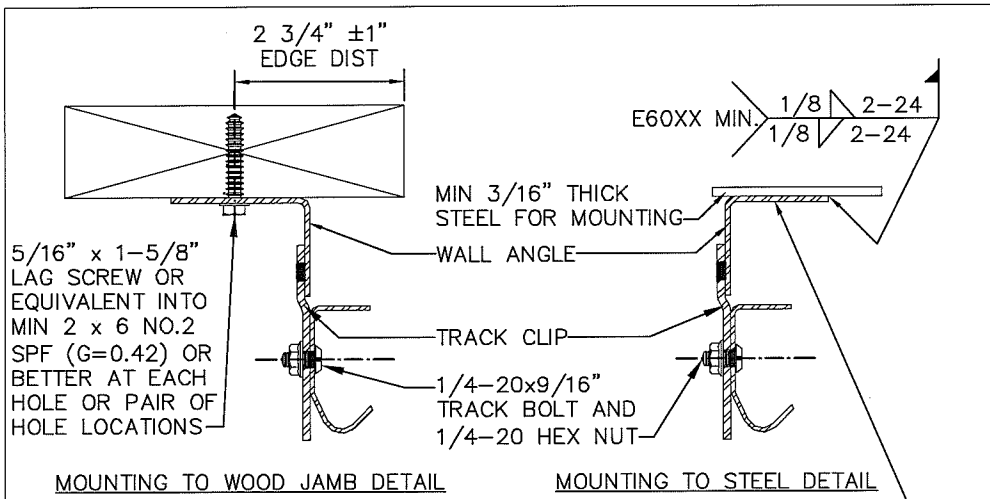

MOUNTING TO WOOD JAMB DETAIL

MOUNTING TO STEEL DETAIL

OPTIONAL: WALL ANGLE MAY BE ATTACHED TO SUPPORTING STEEL WITH MIN. (1) 1/4-20x7/8" SELF DRILLING SCREW WITH 1" O.D. WASHER AT EACH HOLE OR PAIR OF HOLE LOCATIONS IN LIEU OF WELDING

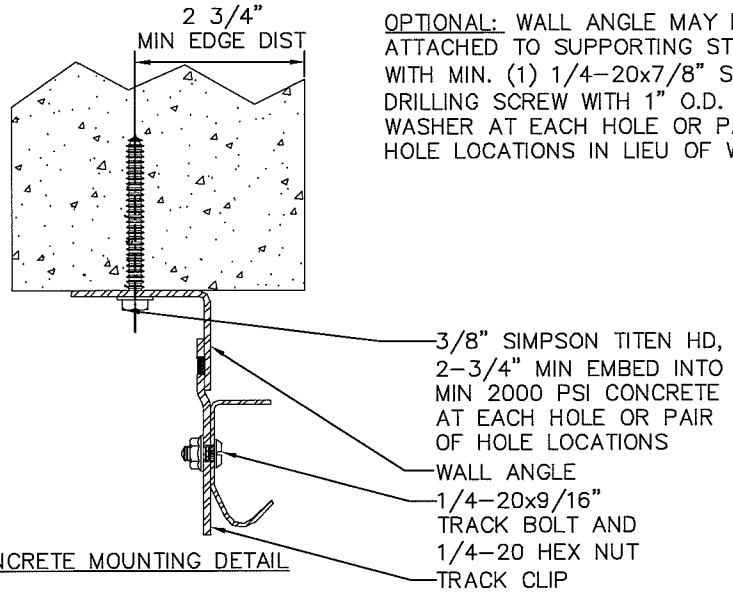

CONCRETE MOUNTING DETAIL

CLIP AND SPLICE PLATE SCHEDULE

MODELS 8024/8124 WITH DECATRIM OVERLAY (2-1/2" THICK)

DOOR HEIGHT	CLIP #'S FROM BOTTOM TO TOP	SPLICE PLATE #
7'-0"	7, 9, 9, 9, 9, 11	16
8'-0"	7, 9, 9, 9, 9, 11, 11	16
9'-0"	7, 9, 9, 9, 9, 11, 11, 11	18
10'-0"	7, 9, 9, 9, 9, 11, 11, 11, 13	18
11'-0"	7, 9, 9, 9, 9, 11, 11, 11, 13, 13	20
12'-0"	7, 9, 9, 9, 9, 11, 11, 11, 13, 13, 13	20
13'-0"	7, 9, 9, 9, 9, 11, 11, 11, 13, 13, 13, 13	22
14'-0"	7, 9, 9, 9, 9, 11, 11, 11, 13, 13, 13, 13	22

MODELS 5200/8000/8024/8100/8124/8500 (2" THICK)

DOOR HEIGHT	CLIP #'S FROM BOTTOM TO TOP	SPLICE PLATE #
7'-0"	5, 6, 6, 7, 7, 9	12
8'-0"	5, 6, 6, 7, 7, 9, 9	12
9'-0"	5, 6, 6, 7, 7, 9, 9, 9	14
10'-0"	5, 6, 6, 7, 7, 9, 9, 9, 11	14
11'-0"	5, 6, 6, 7, 7, 9, 9, 9, 11, 11	16
12'-0"	5, 6, 6, 7, 7, 9, 9, 9, 11, 11, 11	16
13'-0"	5, 6, 6, 7, 7, 9, 9, 9, 11, 11, 11, 13	18
14'-0"	5, 6, 6, 7, 7, 9, 9, 9, 11, 11, 11, 13, 13	18

MODELS 6100/8300/8700 (1-3/8" TO 1-5/8" THICK)

DOOR HEIGHT	CLIP #'S FROM BOTTOM TO TOP	SPLICE PLATE #
7'-0"	4, 4, 4, 4, 5, 6	8
8'-0"	4, 4, 4, 4, 5, 6, 6	8
9'-0"	4, 4, 4, 4, 5, 6, 6, 7	8
10'-0"	4, 4, 4, 4, 5, 6, 6, 7, 7	8
11'-0"	4, 4, 4, 4, 5, 6, 6, 7, 7, 9	10
12'-0"	4, 4, 4, 4, 5, 6, 6, 7, 7, 9, 9	10
13'-0"	4, 4, 4, 4, 5, 6, 6, 7, 7, 9, 9, 9	12
14'-0"	4, 4, 4, 4, 5, 6, 6, 7, 7, 9, 9, 9, 9	12

MODELS 9100/9400/9600/9700/9800 (1" THICK)

DOOR HEIGHT	CLIP #'S FROM BOTTOM TO TOP	SPLICE PLATE #
7'-0"	4, 4, 4, 4, 4, 4	6
8'-0"	4, 4, 4, 4, 4, 4, 4	6
9'-0"	4, 4, 4, 4, 4, 4, 4, 4	6
10'-0"	4, 4, 4, 4, 4, 4, 4, 4, 4	6

REVISIONS

P2 2 INCH TRACK-CLIPS-TEXAS WALL ANGLE 12 FOOT UPDATED
BPJ 6/11/03

P3 UPDATED FORMAT. INCREASED ALLOWABLE PRESSURES TO +46.00/-52.00 PSF FOR ALL DOOR WIDTHS. CHANGED "TEXAS WALL ANGLE" TO "CONTINUOUS WALL ANGLE". ADDED SUBSTRATE MOUNTING DETAIL, CHANGED TO TITEN HD ANCHORS
GRT 4/2/07

P4 CHANGED FORMAT. ADDED MODELS 9800 AND 8024 WITH OVERLAY TO TRACK CLIP SCHEDULE.
GRT 8/21/07

P5 UPDATED MODELS LISTED IN CHARTS. UPDATED SPLICE & CLIP SCHEDULES.
DLP 9/06/07

P6 UPDATE MOUNTING DETAIL DRAWINGS.
GRT 10/05/07

P7 UPDATED CHARTS TO ELIMINATE THE USE OF THE #8 CLIP (REPLACED WITH #9 ACROSS THE BOARD).
DLP 10/24/07

P8 UPDATED STEEL MOUNTING DETAIL
MRB 04/11/08

P9 EXPANDED 1-1/2" TO 1-3/8" DOOR THICKNESS CHART UP TO 14' HIGH.
GRT 12/11/08

P10 ADDED MODEL 8700. UPDATED TITLE BLOCK
GRT 6/2/10

JOHN E. SCATES, PE 7/11/13
3121 FAIRGATE DR.
CARROLLTON, TX 75007
FL PE 51737 TX PE 56308/F2203

PROFESSIONAL ENGINEER'S SEAL PROVIDED ONLY FOR VERIFICATION OF WINDLOAD CONSTRUCTION DETAILS.

STATE OF TEXAS
JOHN E. SCATES
56308
REGISTERED
PROFESSIONAL

TRACK SUPPLEMENT CHART

Wayne® Dalton
3395 ADDISON DRIVE
PENSACOLA, FLORIDA 32514
(850) 474-9890

	DATE	NAME
DRAWN	8/21/07	GRT
CHECKED	8/21/07	MRB

SHEET 2 OF 2

DRAWING PART NO.	REV.
307494	P10