NOTES:

1. VINYL OR WOOD DOOR STOP NAILED A MAXIMUM OF 6" O.C. MUST OVERLAP TOP AND BOTH ENDS OF PANELS MINIMUM 7/16" TO MEET NEGATIVE PRESSURES.

2. U-BAR STEEL TO HAVE A MINIMUM YIELD OF 80 KSI.

3. SLIDE LOCK OR OPERATOR REQUIRED.

4. THE DESIGN OF THE SUPPORTING STRUCTURAL ELEMENTS SHALL BE THE RESPONSIBILITY OF THE PROFESSIONAL OF RECORD FOR THE BUILDING OR STRUCTURE AND IN ACCORDANCE WITH CURRENT BUILDING CODES FOR THE LOADS LISTED ON THIS DRAWING.

5. SECTION STEEL TO HAVE THE FOLLOWING MINIMUM THICKNESS:
EXTERIOR – 27 GA
INTERIOR – 30 GA

6. DOOR JAMB TO BE MINIMUM 2x6 STRUCTURAL GRADE LUMBER. REFER TO JAMB CONNECTION SUPPLEMENT FOR ATTACHMENT TO SUPPORTING STRUCTURE.

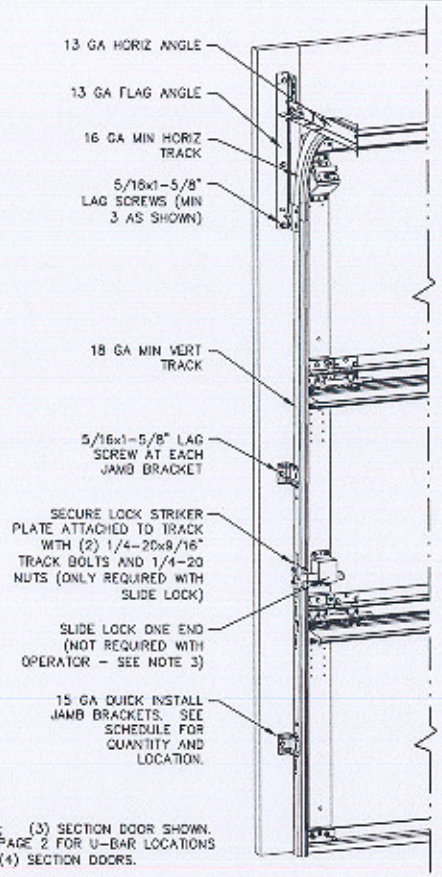


NOTE: (3) SECTION DOOR SHOWN. SEE PAGE 2 FOR U-BAR LOCATIONS FOR (4) SECTION DOORS.

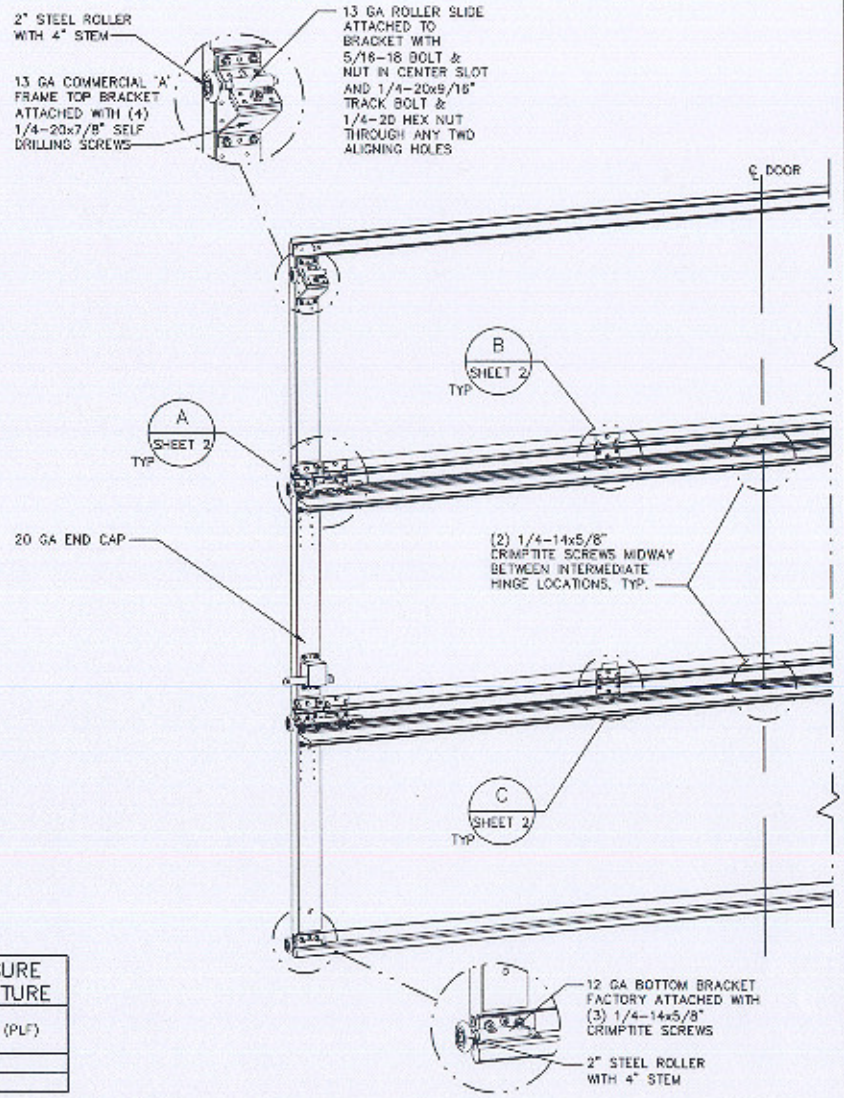


REVISIONS

P5 CHANGES MADE PER ETC LABORATORIES TESTING AND CHANGES TO GENERAL FORMAT 1/16/06 GRT

| JAMB BRACKET SCHEDULE | | | |
|---|---|---|---|
| DOOR HEIGHT | NO. OF SECTIONS | NO. OF JAMB BRACKETS (EACH JAMB) | LOCATION OF CENTERLINE OF JAMB BRACKETS MEASURED FROM BOTTOM OF TRACK (ALL DIMENSIONS ± 2") |
| 7'-0" | 3 | 2 | 13", 45-1/4" |
| 8'-0" | 4 | 3 | 14-1/4", 47-1/4", 66-1/2" |

| SUPERIMPOSED DESIGN PRESSURE LOADS ON SUPPORTING STRUCTURE | | |
|---|---|---|
| DOOR WIDTH | DOOR HEIGHT | UNIFORM LOAD EACH JAMB (PLF) |
| 10'-0" | 7'-0" | +96.0/-110.0 |
| | 8'-0" | +96.0/-110.0 |

MARK R. BARROW
LICENSED
STATE OF FLORIDA
PROFESSIONAL ENGINEER

2/25/08

MARK R. BARROW, PE
FLORIDA LICENSE NO. 57389

Wayne® Dalton

3395 ADDISON DRIVE
PENSACOLA, FLORIDA 32514
(850) 474-9890

| STATIC PRESSURE RATINGS | | APPROVED SIZES | | SCALE: N.T.S. | | SIZE: A |
|---|---|---|---|---|---|---|
| DESIGN (PSF): | +19.20/-22.00 | MAX WIDTH: | 10'-0" | | DATE | NAME |
| TEST (PSF): | +28.80/-33.00 | MAX HEIGHT: | 8'-0" | DRAWN | 1/16/06 | GRT |
| IMPACT/CYCLIC RATED (YES/NO): | NO | MAX SECTION HEIGHT: | 28" | CHECKED | 2/10/06 | MRB |

5500/9700

SHEET 1 OF 2

WINDLOAD SPECIFICATION OPTION CODE 0512

DRAWING PART NO. 313626

REV. P5

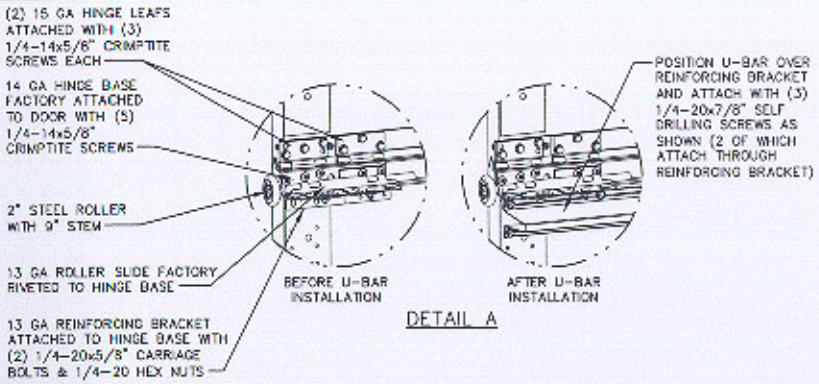


DETAIL A

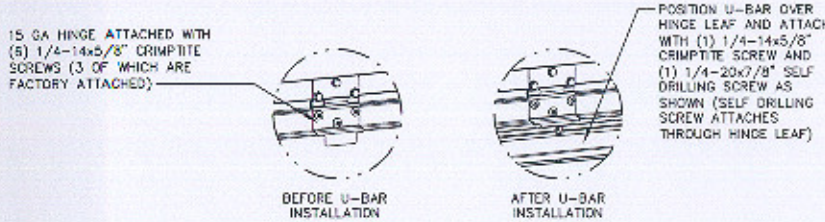


DETAIL B

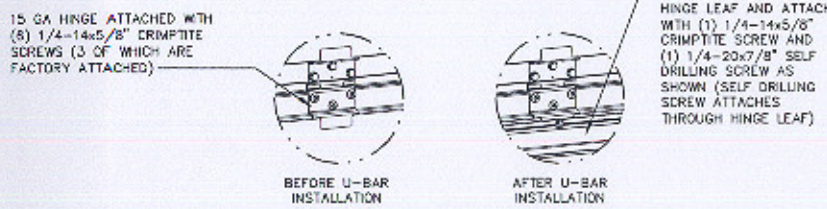


DETAIL C

## U-BAR LOCATIONS

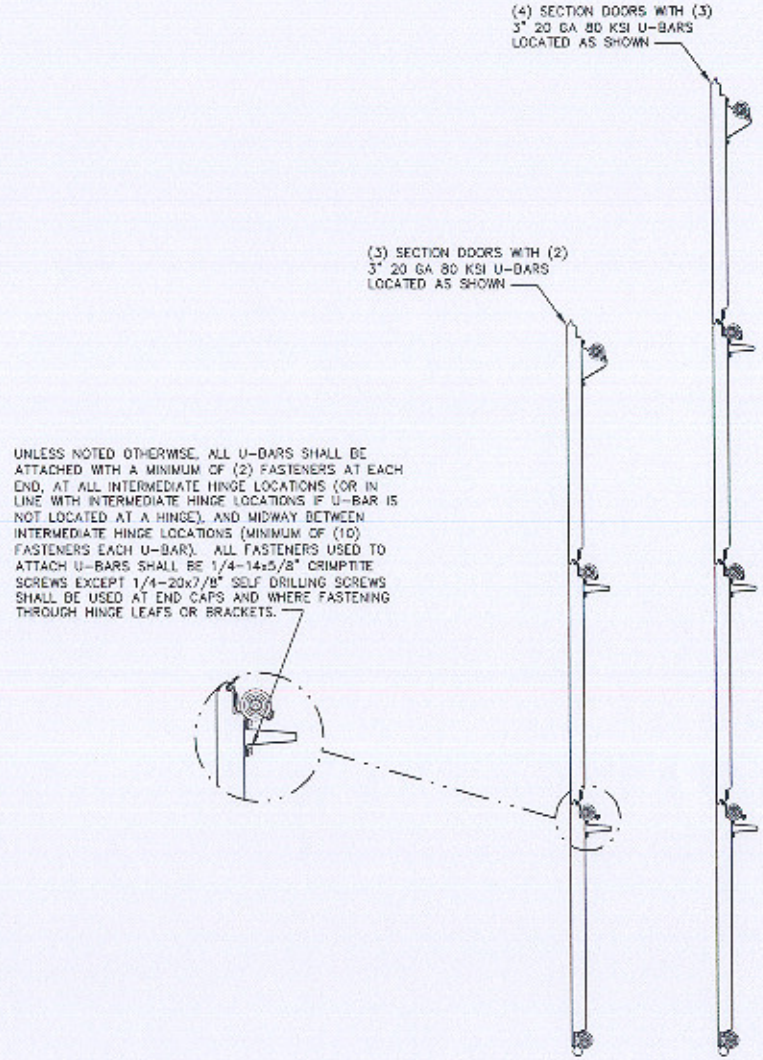


UNLESS NOTED OTHERWISE, ALL U-BARS SHALL BE ATTACHED WITH A MINIMUM OF (2) FASTENERS AT EACH END, AT ALL INTERMEDIATE HINGE LOCATIONS (OR IN LINE WITH INTERMEDIATE HINGE LOCATIONS IF U-BAR IS NOT LOCATED AT A HINGE), AND MIDWAY BETWEEN INTERMEDIATE HINGE LOCATIONS (MINIMUM OF (10) FASTENERS EACH U-BAR). ALL FASTENERS USED TO ATTACH U-BARS SHALL BE 1/4-14x5/8" CRIMPTITE SCREWS EXCEPT 1/4-20x7/8" SELF DRILLING SCREWS SHALL BE USED AT END CAPS AND WHERE FASTENING THROUGH HINGE LEAFS OR BRACKETS.

| REVISIONS |
|---|
| P5 CHANGES MADE PER ETC LABORATORIES TESTING AND CHANGES TO GENERAL FORMAT 1/16/06 GRT |

MARK R. BARROW
LICENSE
No. 57389
STATE OF FLORIDA
PROFESSIONAL ENGINEER

2/25/08

MARK R. BARROW, PE
FLORIDA LICENSE NO. 57389


Wayne Dalton
3395 ADDISON DRIVE
PENSACOLA, FLORIDA 32514
(850) 474-9890


| STATIC PRESSURE RATINGS | | APPROVED SIZES | | SCALE: N.T.S. | | SIZE: A |
|---|---|---|---|---|---|---|
| DESIGN (PSF): | +19.20/-22.00 | MAX WIDTH: | 10'-0" | | DATE | NAME |
| TEST (PSF): | +28.80/-33.00 | MAX HEIGHT: | 8'-0" | DRAWN | 1/16/06 | GRT |
| IMPACT/CYCLIC RATED (YES/NO): | NO | MAX SECTION HEIGHT: | 28" | CHECKED | 2/10/06 | MRB |

5500/9700

SHEET 2 OF 2

WINDLOAD SPECIFICATION OPTION CODE 0512

DRAWING PART NO. 313626

REV. P5