NOTES:

1. VINYL OR WOOD DOOR STOP NAILED A MAXIMUM OF 6" O.C. MUST OVERLAP TOP AND BOTH ENDS OF PANELS MINIMUM 7/16" TO MEET NEGATIVE PRESSURES.
2. U-BAR STEEL TO HAVE A MINIMUM YIELD OF 80 KSI.
3. SLIDE LOCK OR OPERATOR REQUIRED.
4. THE DESIGN OF THE SUPPORTING STRUCTURAL ELEMENTS SHALL BE THE RESPONSIBILITY OF THE PROFESSIONAL OF RECORD FOR THE BUILDING OR STRUCTURE AND IN ACCORDANCE WITH CURRENT BUILDING CODES FOR THE LOADS LISTED ON THIS DRAWING.
5. SECTION STEEL TO HAVE THE FOLLOWING MINIMUM THICKNESS:
   EXTERIOR – 27 GA
   INTERIOR – 30 GA
6. DOOR JAMB TO BE MINIMUM 2x6 STRUCTURAL GRADE LUMBER. REFER TO JAMB CONNECTION SUPPLEMENT FOR ATTACHMENT TO SUPPORTING STRUCTURE.

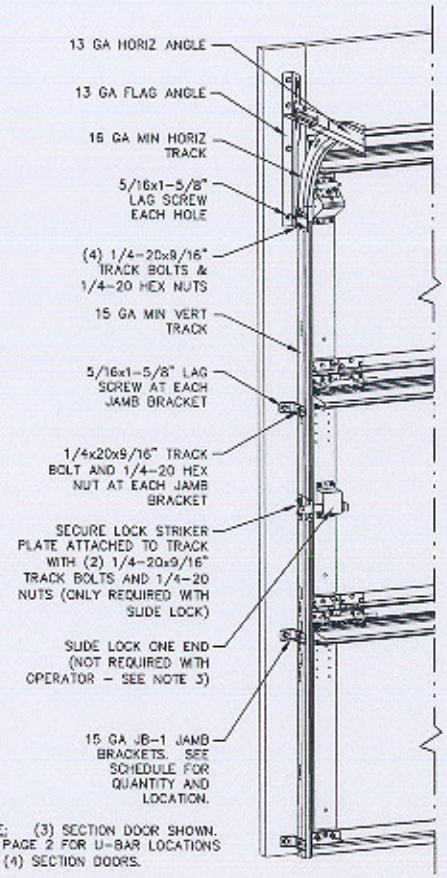

NOTE: (3) SECTION DOOR SHOWN. SEE PAGE 2 FOR U-BAR LOCATIONS FOR (4) SECTION DOORS.

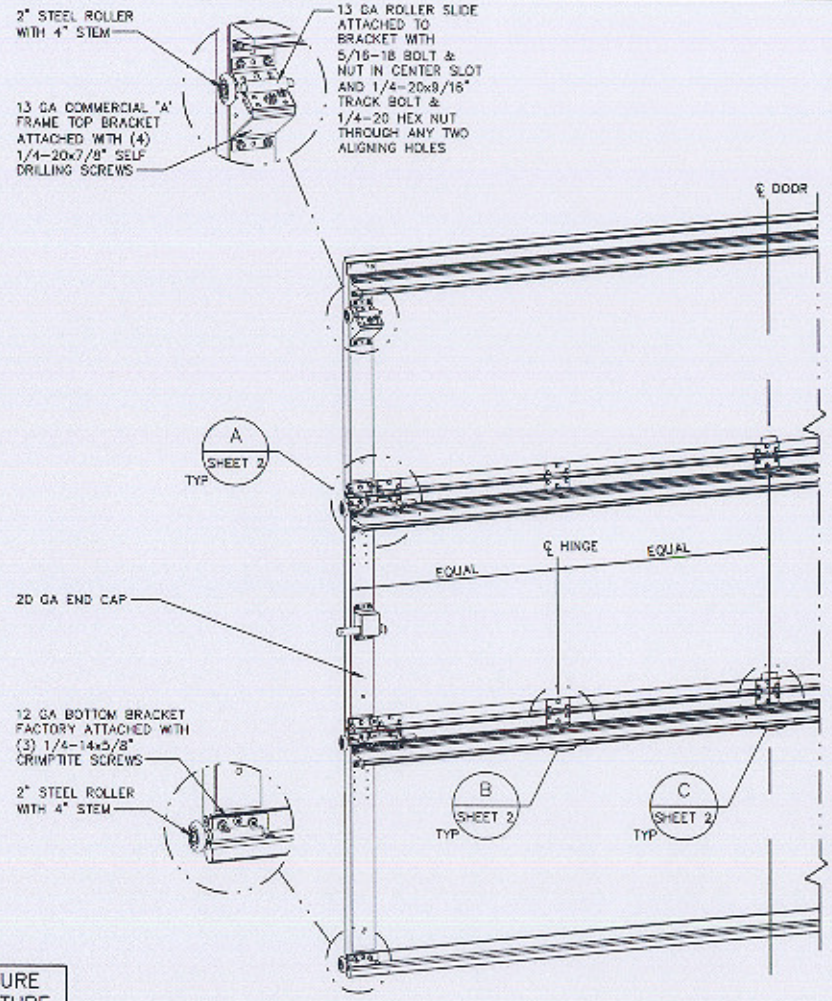

REVISIONS
P4 CHANGES MADE PER ETC LABORATORIES TESTING AND CHANGES TO GENERAL FORMAT 1/12/06 GRT

JAMB BRACKET SCHEDULE

DOOR HEIGHT	NO. OF SECTIONS	NO. OF JAMB BRACKETS (EACH JAMB)	LOCATION OF CENTERLINE OF JAMB BRACKETS MEASURED FROM BOTTOM OF TRACK (ALL DIMENSIONS ± 2")
7'-0"	3	3	2", 26", 53"
8'-0"	4	4	2", 26", 48", 75"

SUPERIMPOSED DESIGN PRESSURE LOADS ON SUPPORTING STRUCTURE

DOOR WIDTH	DOOR HEIGHT	UNIFORM LOAD EACH JAMB (PLF)
9'-0"	7'-0"	+121.1/-138.6
	8'-0"	+121.1/-138.6
8'-0"	7'-0"	+107.6/-123.2
	8'-0"	+107.6/-123.2

MARK R. BARROW
LICENSE
57389
STATE OF FLORIDA
PROFESSIONAL ENGINEER

2/25/06

MARK R. BARROW, PE
FLORIDA LICENSE NO. 57389

Wayne® Dalton

3395 ADDISON DRIVE
PENSACOLA, FLORIDA 32514
(850) 474-9890

STATIC PRESSURE RATINGS		APPROVED SIZES		SCALE: N.T.S.		SIZE: A
DESIGN (PSF):	+26.90/-30.80	MAX WIDTH:	9'-0"		DATE	NAME
TEST (PSF):	+40.35/-46.20	MAX HEIGHT:	8'-0"	DRAWN	1/12/06	GRT
IMPACT/CYCLIC RATED (YES/NO):	NO	MAX SECTION HEIGHT:	28"	CHECKED	2/10/06	MRB

5500/9700

SHEET 1 OF 2

WINDLOAD SPECIFICATION OPTION CODE 0504

DRAWING PART NO. 313586

REV. P4

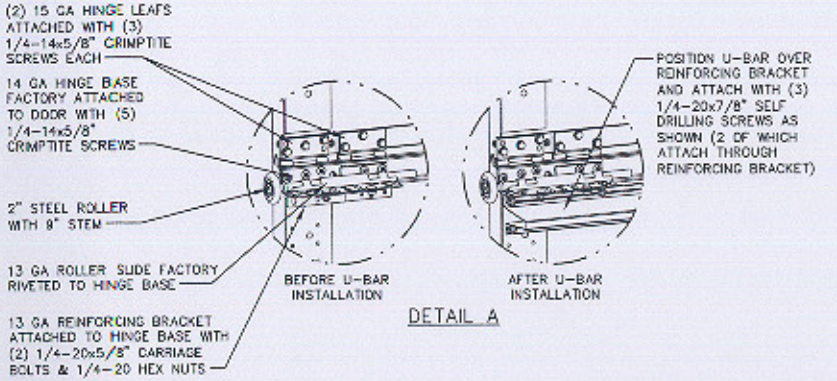

DETAIL A

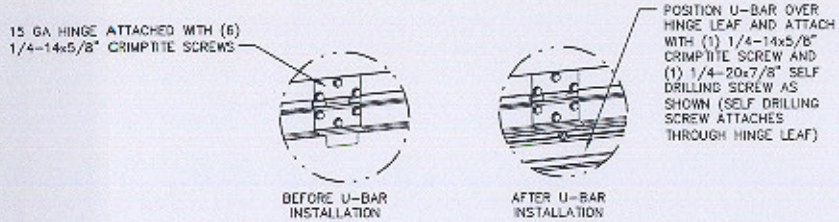

DETAIL B

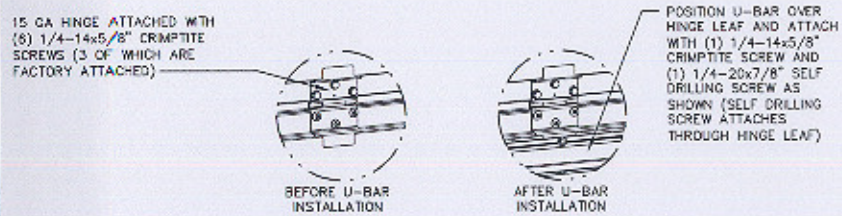

DETAIL C

U-BAR LOCATIONS

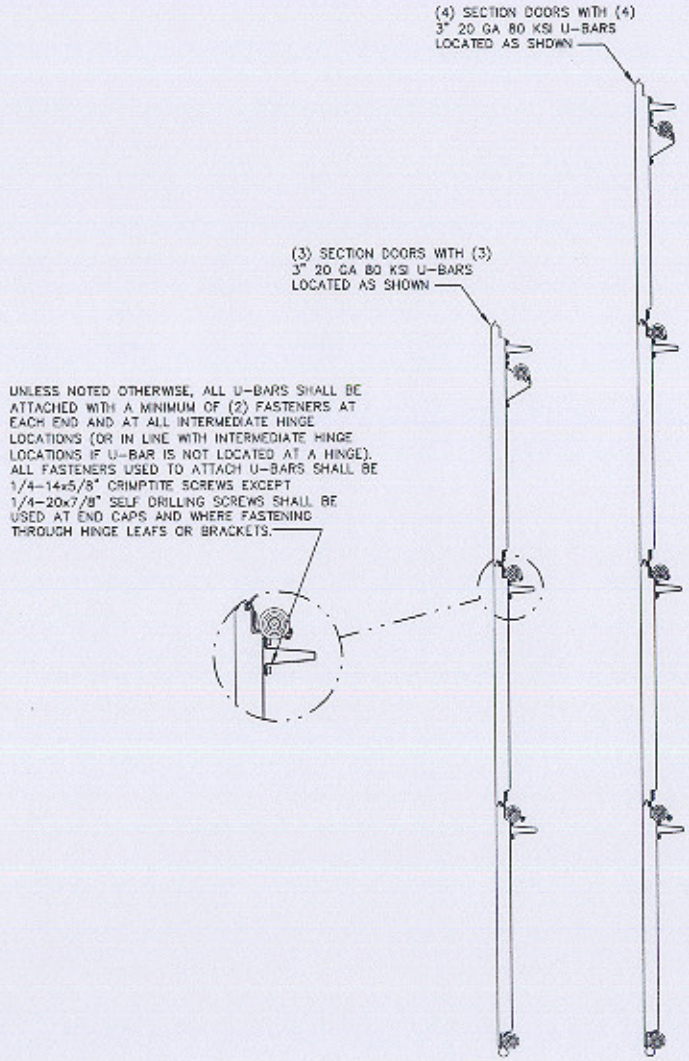

REVISIONS
P4 CHANGES MADE PER ETC LABORATORIES TESTING AND CHANGES TO GENERAL FORMAT 1/12/06 GRT

MARK R. BARROW
LICENSE
STATE OF FLORIDA
PROFESSIONAL ENGINEER

2/25/08

MARK R. BARROW, PE
FLORIDA LICENSE NO. 57389

Wayne® Dalton

3395 ADDISON DRIVE
PENSACOLA, FLORIDA 32514
(850) 474-9890

STATIC PRESSURE RATINGS		APPROVED SIZES		SCALE: N.T.S.		SIZE: A
DESIGN (PSF):	+26.90/-30.80	MAX WIDTH:	9'-0"		DATE	NAME
TEST (PSF):	+40.35/-46.20	MAX HEIGHT:	8'-0"	DRAWN	1/12/06	GRT
IMPACT/CYCLIC RATED (YES/NO):	NO	MAX SECTION HEIGHT:	28"	CHECKED	2/10/08	MRB

5500/9700

SHEET 2 OF 2

WINDLOAD SPECIFICATION OPTION CODE 0504

DRAWING PART NO. 313586 REV. P4