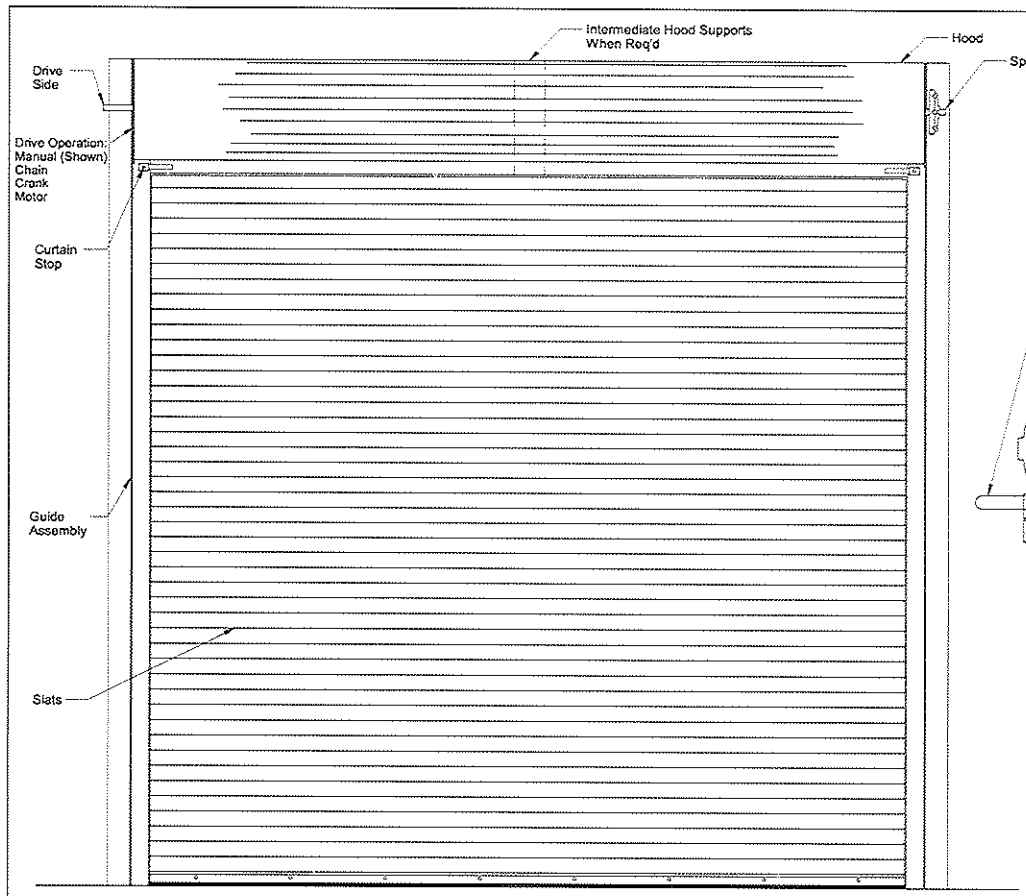


" Elevation View "

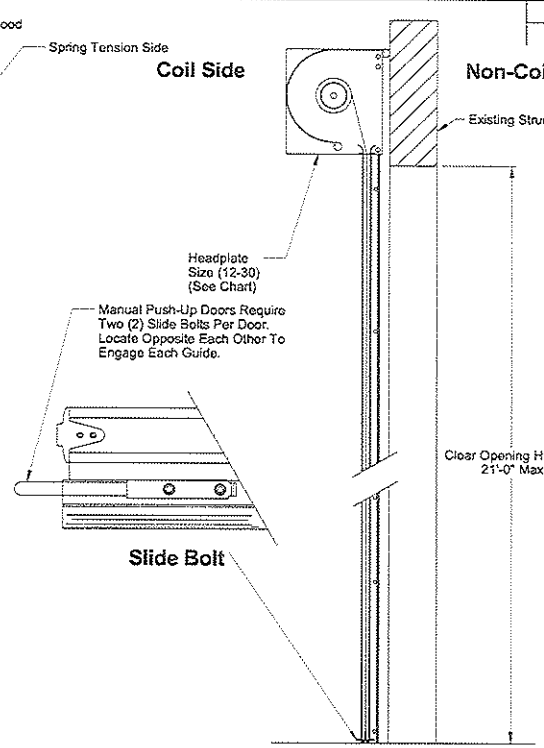


Section Through Opening

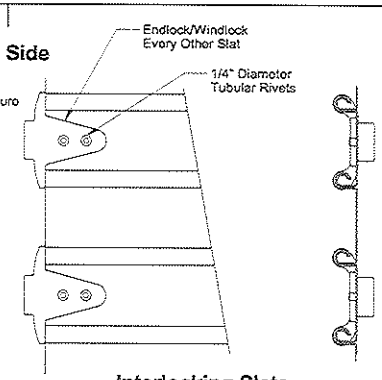


Interlocking Slats w/Endlock/Windlocks

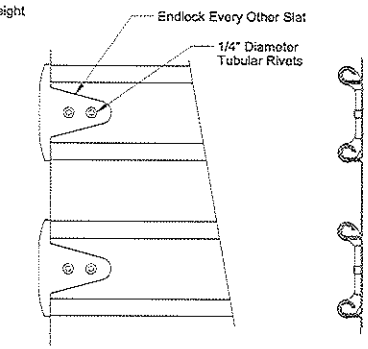


Interlocking Slats w/o Windlocks

Doors Tested Per
ANSI/DASMA 108-05
ANSI/DASMA 108-12
For Static Air Pressure

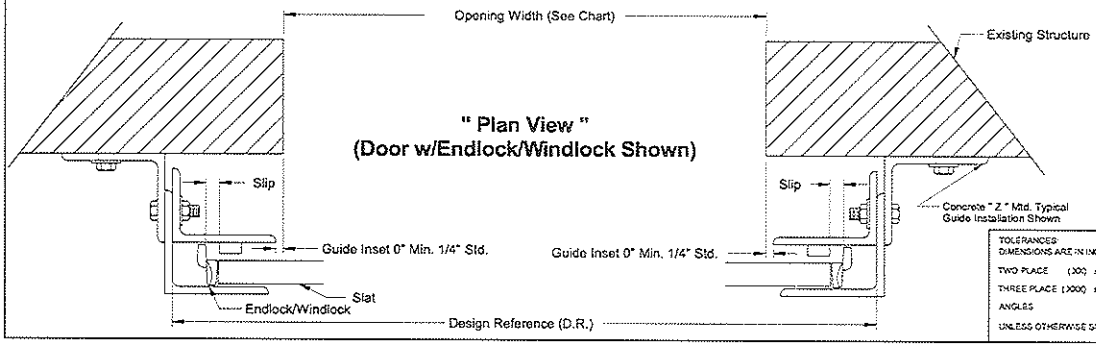


" Plan View "
(Door w/Endlock/Windlock Shown)

5-3-2017

Richard A. Baumann, P.E.
698 Timber Creek Road
Dixon, IL 61021
T.P.E. #85227

| REV | DESCRIPTION | ECN NO. | DATE |
|---|---|---|---|
| A | Release for Production | 7415 01 | 07/21/2016 |

TOLERANCES:
DIMENSIONS ARE IN INCHES
TWO PLACE (.XX) ± .03
THREE PLACE (.XXX) ± .015
ANGLES ± 1°
UNLESS OTHERWISE SPECIFIED

MATERIAL

FINISH:

SCALE: None
DRAWN BY: M. Routzel
CHECKED BY: J. Bonnoli
DATE: 07/21/2016
ECN NO. 7415 01

RAYNOR
1101 EAST RIVER ROAD
DIXON, IL 61021

TITLE: Specifications, Windload Doors For Texas Approvals

NO. P-2262

SHEET 1 OF 12

REV A

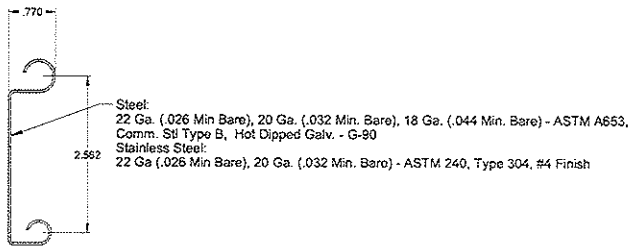


**Flat Slat**
**" FF "**

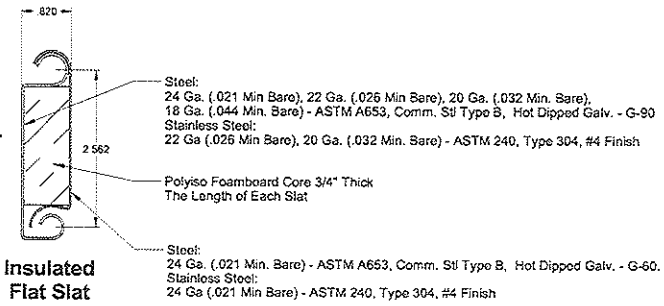


**Insulated Flat Slat**
**" IF "**

**Flat Slat and Insulated Flat Slat Profiles**

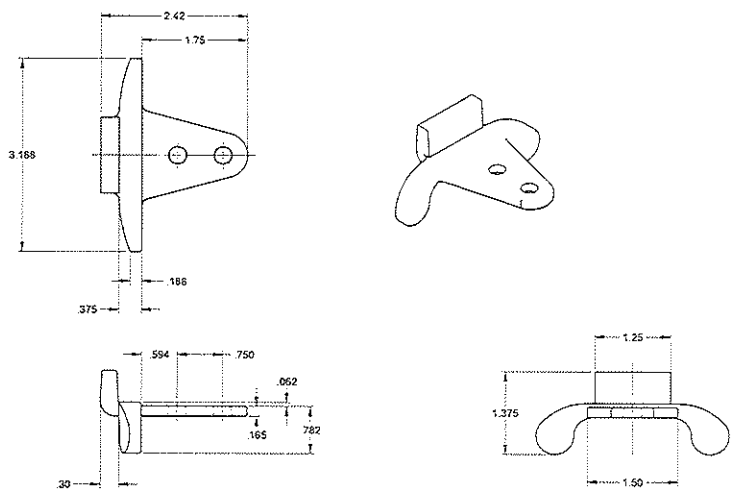


**Malleable Cast Iron Endlock/Windlock**

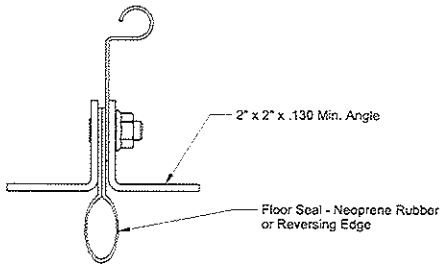


**Bottom Bar Standard Assembly**

## General Specifications

1) DOORS shall be rolling steel model DuraCoil (Standard Service Door) as manufactured by Raynor Garage Doors.

2) GUIDES - Structural steel angles, in accordance to ASTM A36 Steel, Min. 5/16" thick and rolled angles in accordance to ASTM A1011 HSLA-F, grade 50 steel, min. .180 thick. Top of guide angles flared and provided with 4 removable curtain stops.

3) BRACKETS - Steel plates, in accordance to ASTM A36 Steel, Min. 3/16" thick, bolted to guides for mounting curtain and barrel assembly. Drive side bracket shall be fitted with a sealed ball bearing for long life.

4) BARREL - Structural steel pipe, Minimum 4 1/2" O.D. x .120" wall thickness and designed to limit maximum deflection, under load, to .03" per foot of span.

5) SPRING COUNTERBALANCE - The curtain shall be counterbalanced by means of oil tempered, helical torsion springs, grease-packed and mounted on a single continous steel torsion shaft. Springs shall be compression spring design to facilitate any counterbalance maintenance. Cast iron spring anchors shall transfer full spring loading to the barrel.

6) HOOD - Shall be 24 ga. Commercial quality hot-dipped galvanized steel. Hood to have rolled edges to provide rigidity.

7) GUIDE HARDWARE - All bolts and washers shall be galvanized steel or stainless steel with a minimum bolt tensile strength of 60 K.S.I.

8) ENDLOCK/WINDLOCKS and ENDLOCKS - Shall be cast malleable iron, in accordance to ASTM A47 - GRADE 32510 with electroplating in accordance to ASTM B633, clear chromate, Min. .0007 zinc coating thickness.

9) CURTAIN FLAT SLAT - Interlocking slats rollformed from commercial quality hot dipped galvanized (G-90) steel per ASTM A653, Type 'B' (min. 30,000 psi) or stainless steel per ASTM 240, Type 304 (min. 30,000 psi). Malleable endlock/windlocks fastened to alternate slats with 2 rivets per lock, eliminates lateral movement and prevent slats from wearing at surfaces coming in contact with guides. Bottom of curtain shall be reinforced with 2 steel angles, Min. 2" x 2" x .130" or 2" x 2" x 3/16" stainless steel.

10) CURTAIN INSULATED SLAT - Interlocking slats rollformed from commercial quality hot dipped galvanized (G-90) steel per ASTM A653, Type 'B' (min. 30,000 psi) .or stainless steel per ASTM 240, Type 304 (min. 30,000 psi). Each slat shall have a 3/4" thick polyiso foamboard core placed within the full length of the slat. Backing cover rollformed from 24 ga. commercial quality hot dipped galvanized (G-60) steel per ASTM A653 or stainless steel per ASTM 240. Malleable endlock/windlocks fastened to alternate slats with 2 rivets per lock, eliminates lateral movement and prevent slats from wearing at surfaces coming in contact with guides. Bottom of curtain shall be reinforced with 2 steel angles, Min. 2" x 2" x .130" or 2" x 2" x 3/16" stainless steel.

5-3-2017

| | | | |
|---|---|---|---|
| SCALE: None | RAYNOR | TITLE Specifications, Windload Doors For Texas Approvals | |
| DRAWN BY M. Reutzel | | | |
| CHECKED BY J. Bonnell | | | |
| DATE. 07/21/2016 | 1101 EAST RIVER ROAD DIXON, IL 61021 | NO. P-2262 | SHEET 2 / REV A |
| ECN. NO. 7415 01 | | | |

## Notes:

1. Building Designer Note: Structure must be designed to support the forces of "Fx" and "Fy" shown in chart
2. Fx and Fy are horizontal and vertical components of the reaction, resulting from windloads on the rolling steel door. The existing structure shall be capable of resisting Fx and Fy forces shown.

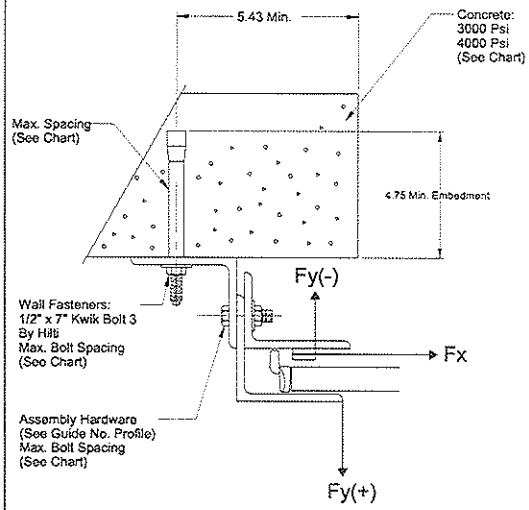


**Concrete Jamb - " Z " Mtd. (Shown)**
**or**
**Steel Jamb - "Z" Mtd.**

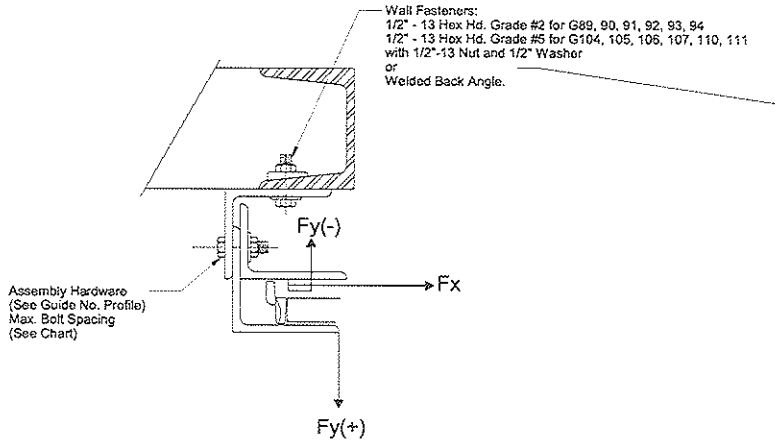


**Steel Jamb - " E " Mtd.**

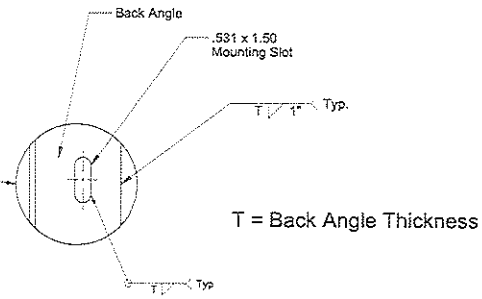


**" Welding Detail "**
(Weld may be used in lieu of bolting at same bolt spacing)

5-3-2017

| | | | |
|---|---|---|---|
| SCALE: None | RAYNOR | TITLE: Specifications, Windload Doors For Texas Approvals | |
| DRAWN BY: M. Reutzel | | | |
| CHECKED BY: J. Bonnell | | | |
| DATE: 07/21/2016 | 1101 EAST RIVER ROAD DIXON, IL 61021 | NO. P-2262 | SHEET 3 / REV A |
| ECN NO. 7415.01 | | | |

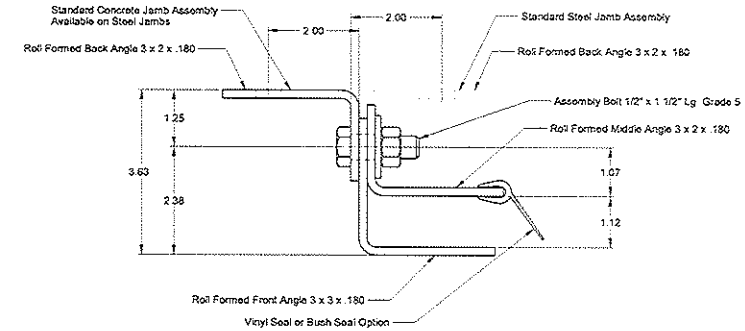


**Guide Ass'y #89**

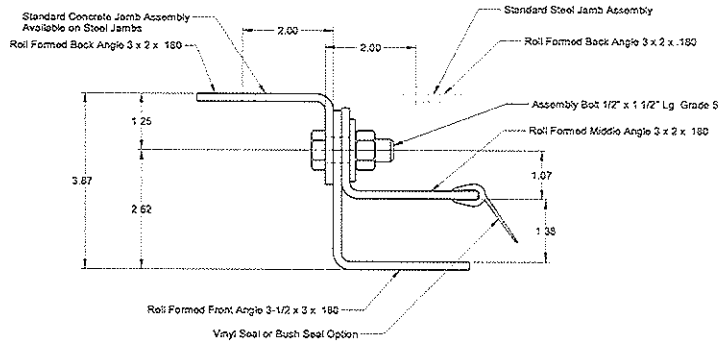


**Guide Ass'y #92**

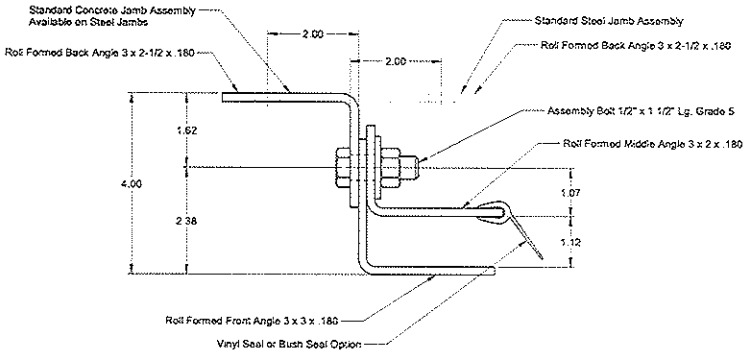


**Guide Ass'y #90**

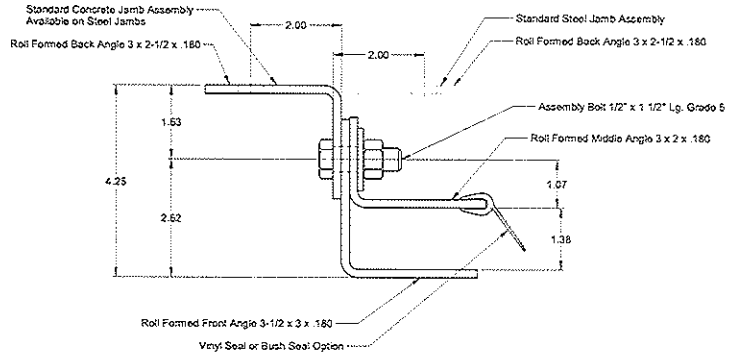


**Guide Ass'y #93**

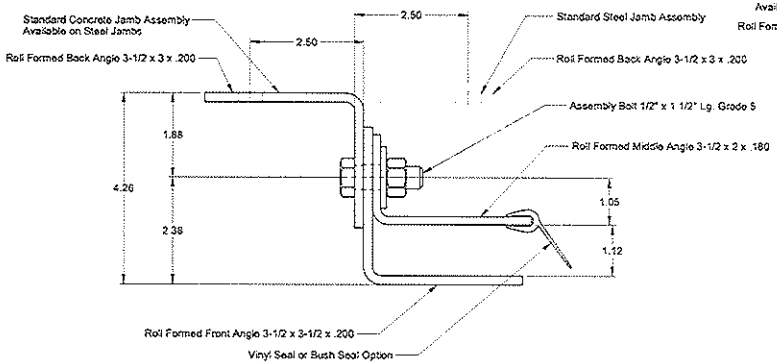


**Guide Ass'y #91**

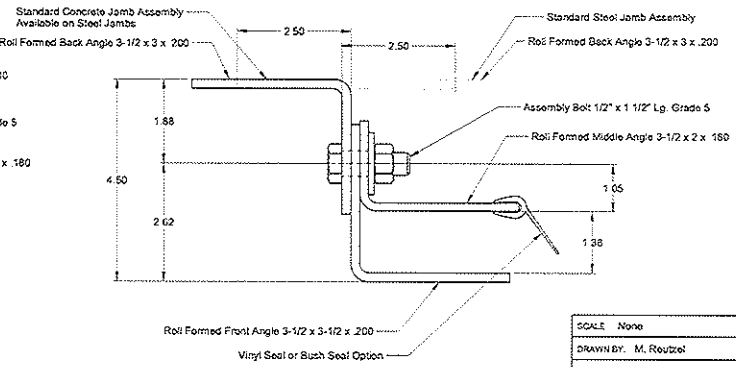


**Guide Ass'y #94**

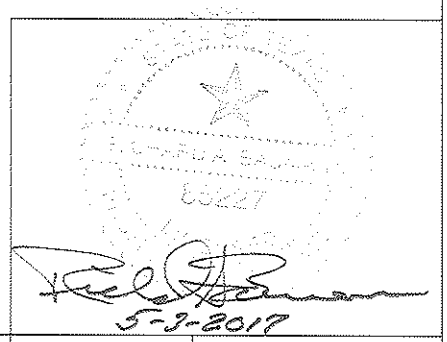


| | | | |
|---|---|---|---|
| SCALE None | RAYNOR<br>1101 EAST RIVER ROAD<br>DIXON, IL 61021 | TITLE: Specifications, Windload Doors For Texas Approvals | |
| DRAWN BY M. Reutzel | | | |
| CHECKED BY J. Bonnell | | | |
| DATE 07/21/2016 | | NO. P-2262 | SHEET 4 / REV A |
| ECN NO 7415.01 | | | |

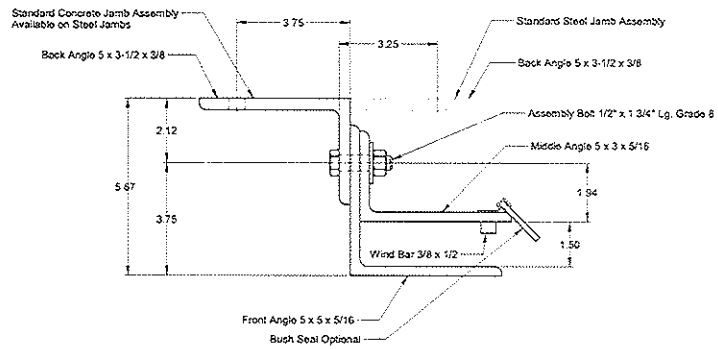


## Guide Ass'y #104

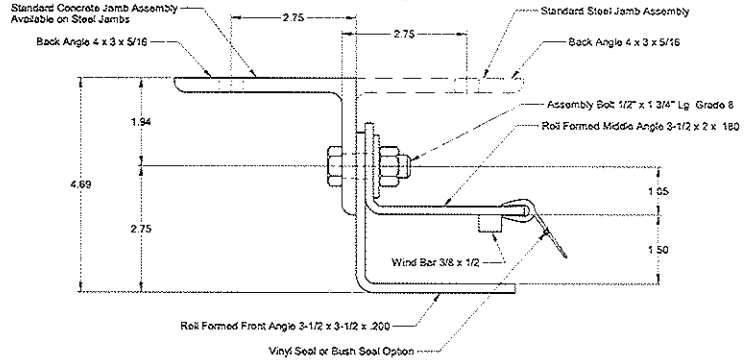


## Guide Ass'y #105

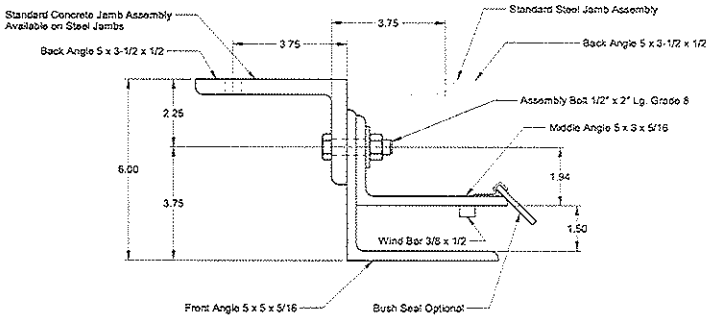


## Guide Ass'y #106

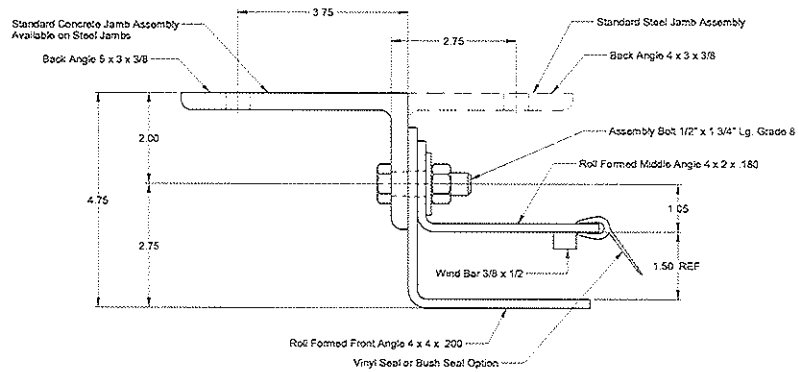


## Guide Ass'y #107

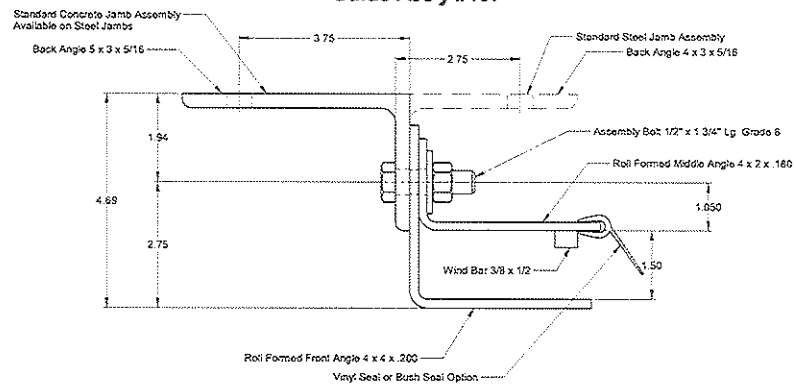


## Guide Ass'y #110

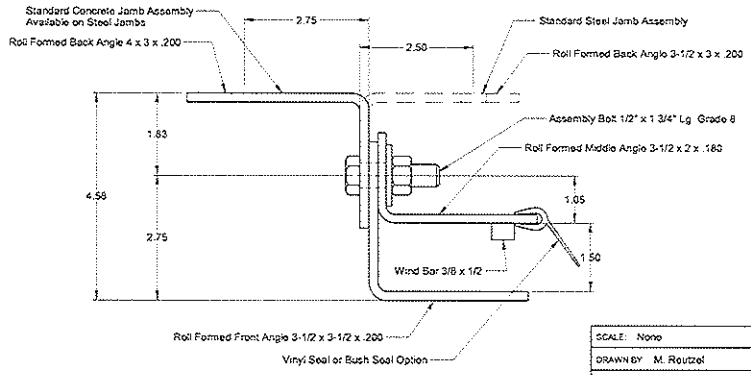


## Guide Ass'y #111

5-3-2017

| | | | |
|---|---|---|---|
| SCALE: None | RAYNOR<br>1101 EAST RIVER ROAD<br>DIXON, IL 61021 | TITLE: Specifications, Windload Doors For Texas Approvals | |
| DRAWN BY: M. Routzel | | NO. P-2262 | SHEET 5 / REV A |
| CHECKED BY: J. Bonnell | | | |
| DATE: 07/21/2016 | | | |
| ECN NO.: 7415.01 | | | |

# DuraCoil - Insulated Flat Slat 24 Ga.

Notes:
D.R. = Design Reference
N/A = Not Applicable

**20 PSF DESIGN LOAD**

| Headplate Size | Door Opening Width Including | Std./Wind Bar | Guide Ass'y No. | Slat Length | Windlock Freqency | Slip | Wind Bar Location | Bolt Spacing Steel Jambs | Bolt Spacing Concrete Jambs 3000 PSI | Bolt Spacing Concrete Jambs 4000 PSI | Guide Load FX Lbs./Ft. | Guide Load FY Lbs./Ft. |
|---|---|---|---|---|---|---|---|---|---|---|---|---|
| 16 - 30 | 20' | Wind Bar | 111 | D.R. - 3.00 | 2nd | 1.000 | 2.125 | 24" | 22" | 24" | 385 | 200 |

**25 PSF DESIGN LOAD**

| Headplate Size | Door Opening Width Including | Std./Wind Bar | Guide Ass'y No. | Slat Length | Windlock Freqency | Slip | Wind Bar Location | Bolt Spacing Steel Jambs | Bolt Spacing Concrete Jambs 3000 PSI | Bolt Spacing Concrete Jambs 4000 PSI | Guide Load FX Lbs./Ft. | Guide Load FY Lbs./Ft. |
|---|---|---|---|---|---|---|---|---|---|---|---|---|
| 16 - 30 | 19' | Wind Bar | 111 | D.R. - 3.00 | 2nd | 1.000 | 2.125 | 24" | 19" | 21" | 471 | 238 |
| 18 - 30 | 20' | | 105 | | | 1.000 | 2.125 | | 16" | 17" | 609 | 250 |

**30 PSF DESIGN LOAD**

| Headplate Size | Door Opening Width Including | Std./Wind Bar | Guide Ass'y No. | Slat Length | Windlock Freqency | Slip | Wind Bar Location | Bolt Spacing Steel Jambs | Bolt Spacing Concrete Jambs 3000 PSI | Bolt Spacing Concrete Jambs 4000 PSI | Guide Load FX Lbs./Ft. | Guide Load FY Lbs./Ft. |
|---|---|---|---|---|---|---|---|---|---|---|---|---|
| 16 - 30 | 17' | Wind Bar | 111 | D.R. - 3.00 | 2nd | 1.000 | 2.125 | 24" | 20" | 22" | 346 | 255 |
| 18 - 30 | 20' | | 105 | | | 1.000 | 2.125 | 22" | 12" | 14" | 832 | 300 |

**35 PSF DESIGN LOAD**

| Headplate Size | Door Opening Width Including | Std./Wind Bar | Guide Ass'y No. | Slat Length | Windlock Freqency | Slip | Wind Bar Location | Bolt Spacing Steel Jambs | Bolt Spacing Concrete Jambs 3000 PSI | Bolt Spacing Concrete Jambs 4000 PSI | Guide Load FX Lbs./Ft. | Guide Load FY Lbs./Ft. |
|---|---|---|---|---|---|---|---|---|---|---|---|---|
| 16 - 30 | 16' | Wind Bar | 111 | D.R. - 3.00 | 2nd | 1.000 | 2.125 | 24" | 19" | 21" | 324 | 280 |
| 18 - 30 | 20' | | 110 | D.R. - 3.75 | | 1.125 | 2.625 | 22" | 14" | 16" | 966 | 350 |

**40 PSF DESIGN LOAD**

| Headplate Size | Door Opening Width Including | Std./Wind Bar | Guide Ass'y No. | Slat Length | Windlock Freqency | Slip | Wind Bar Location | Bolt Spacing Steel Jambs | Bolt Spacing Concrete Jambs 3000 PSI | Bolt Spacing Concrete Jambs 4000 PSI | Guide Load FX Lbs./Ft. | Guide Load FY Lbs./Ft. |
|---|---|---|---|---|---|---|---|---|---|---|---|---|
| 16 - 30 | 14' | Wind Bar | 111 | D.R. - 3.00 | 2nd | 0.75 | 1.875 | 24" | 22" | 24" | 170 | 280 |
| 18 - 30 | 18' | | 110 | D.R. - 3.75 | | 1.125 | 2.625 | 24" | 15" | 17" | 811 | 360 |
| | 20' | | 104 | D.R. - 4.25 | | 1.875 | 3.625 | 19" | 12" | 13" | 797 | 400 |

**45 PSF DESIGN LOAD**

| Headplate Size | Door Opening Width Including | Std./Wind Bar | Guide Ass'y No. | Slat Length | Windlock Freqency | Slip | Wind Bar Location | Bolt Spacing Steel Jambs | Bolt Spacing Concrete Jambs 3000 PSI | Bolt Spacing Concrete Jambs 4000 PSI | Guide Load FX Lbs./Ft. | Guide Load FY Lbs./Ft. |
|---|---|---|---|---|---|---|---|---|---|---|---|---|
| 16 - 30 | 14' | Wind Bar | 111 | D.R. - 3.00 | 2nd | 0.812 | 1.937 | 24" | 19" | 20" | 268 | 315 |
| 18 - 30 | 17' | | 110 | D.R. - 3.75 | | 1.125 | 2.625 | 23" | 15" | 17" | 782 | 383 |
| | 20' | | 104 | D.R. - 4.25 | | 2.062 | 3.812 | 17" | N/A | 11" | 892 | 450 |

**50 PSF DESIGN LOAD**

| Headplate Size | Door Opening Width Including | Std./Wind Bar | Guide Ass'y No. | Slat Length | Windlock Freqency | Slip | Wind Bar Location | Bolt Spacing Steel Jambs | Bolt Spacing Concrete Jambs 3000 PSI | Bolt Spacing Concrete Jambs 4000 PSI | Guide Load FX Lbs./Ft. | Guide Load FY Lbs./Ft. |
|---|---|---|---|---|---|---|---|---|---|---|---|---|
| 16 - 30 | 12' | Wind Bar | 111 | D.R. - 3.00 | 2nd | 0.500 | 1.625 | 24" | 22" | 24" | 55 | 300 |
| 18 - 30 | 16' | | 110 | D.R. - 3.75 | | 1.125 | 2.625 | 23" | 15" | 17" | 947 | 425 |

**55 PSF DESIGN LOAD**

| Headplate Size | Door Opening Width Including | Std./Wind Bar | Guide Ass'y No. | Slat Length | Windlock Freqency | Slip | Wind Bar Location | Bolt Spacing Steel Jambs | Bolt Spacing Concrete Jambs 3000 PSI | Bolt Spacing Concrete Jambs 4000 PSI | Guide Load FX Lbs./Ft. | Guide Load FY Lbs./Ft. |
|---|---|---|---|---|---|---|---|---|---|---|---|---|
| 16 - 30 | 11' | Wind Bar | 111 | D.R. - 3.00 | 2nd | 0.375 | 1.500 | 24" | 23" | 24" | 0 | 303 |
| 18 - 30 | 15' | | 110 | D.R. - 3.75 | | 1.000 | 2.500 | 23" | 15" | 17" | 692 | 413 |
| | 16' | | 104 | D.R. - 4.25 | | 1.437 | 3.187 | 16" | N/A | 11" | 903 | 468 |

**60 PSF DESIGN LOAD**

| Headplate Size | Door Opening Width Including | Std./Wind Bar | Guide Ass'y No. | Slat Length | Windlock Freqency | Slip | Wind Bar Location | Bolt Spacing Steel Jambs | Bolt Spacing Concrete Jambs 3000 PSI | Bolt Spacing Concrete Jambs 4000 PSI | Guide Load FX Lbs./Ft. | Guide Load FY Lbs./Ft. |
|---|---|---|---|---|---|---|---|---|---|---|---|---|
| 18 - 30 | 15' | Wind Bar | 110 | D.R. - 3.75 | 2nd | 0.812 | 2.312 | 23" | 15" | 16" | 1029 | 450 |
| | 16' | | 104 | D.R. - 4.25 | | 1.218 | 2.968 | 16" | N/A | 11" | 944 | 480 |

STATE OF TEXAS
RICHARD A. BAUMANN
85227
LICENSED
PROFESSIONAL ENGINEER
5-3-2017

| | | | |
|---|---|---|---|
| SCALE: None | RAYNOR | TITLE: Specifications, Windload Doors For Texas Approvals | |
| DRAWN BY: M. Reutzel | | | |
| CHECKED BY: J. Bonnell | | | |
| DATE: 07/21/2016 | 1101 EAST RIVER ROAD DIXON, IL 61021 | NO. P-2262 | SHEET 6 / REV A |
| ECN. NO.: 7415.01 | | | |

# DuraCoil - Insulated Flat Slat 22 Ga.

Notes:
D.R. = Design Reference
N/A = Not Applicable

### 20 PSF DESIGN LOAD

| Headplate Size | Door Opening Width Including | Std./Wind Bar | Guide Ass'y No. | Slat Length | Windlock Freqency | Slip | Wind Bar Location | Bolt Spacing Steel Jambs | Bolt Spacing Concrete Jambs 3000 PSI | Bolt Spacing Concrete Jambs 4000 PSI | Guide Load FX Lbs./Ft. | Guide Load FY Lbs./Ft. |
|---|---|---|---|---|---|---|---|---|---|---|---|---|
| 12 - 16 | 17'-3" | Std. | 92 | D.R. - 2.00 | N/A | N/A | N/A | 24" | 18" | 19" | 0 | 173 |
| 18 - 22 | | | 93 | D.R. - 2.25 | | | | 24" | 18" | 19" | | |
| 24 - 30 | | | 94 | D.R. - 2.75 | | | | 24" | 18" | 19" | | |
| 16 - 30 | 21' | Wind Bar | 111 | D.R. - 3.00 | 2nd | 1.000 | 2.125 | 24" | 21" | 23" | 430 | 210 |
| 18 - 30 | 24' | | 105 | | | 1.000 | 2.125 | | 14" | 15" | 768 | 240 |

### 25 PSF DESIGN LOAD

| Headplate Size | Door Opening Width Including | Std./Wind Bar | Guide Ass'y No. | Slat Length | Windlock Freqency | Slip | Wind Bar Location | Bolt Spacing Steel Jambs | Bolt Spacing Concrete Jambs 3000 PSI | Bolt Spacing Concrete Jambs 4000 PSI | Guide Load FX Lbs./Ft. | Guide Load FY Lbs./Ft. |
|---|---|---|---|---|---|---|---|---|---|---|---|---|
| 12 - 16 | 15'-5" | Std. | 92 | D.R. - 2.00 | N/A | N/A | N/A | 24" | 16" | 17" | 0 | 193 |
| 18 - 22 | | | 93 | D.R. - 2.25 | | | | 24" | 16" | 17" | | |
| 24 - 30 | | | 94 | D.R. - 2.75 | | | | 24" | 16" | 17" | | |
| 16 - 30 | 19' | Wind Bar | 111 | D.R. - 3.00 | 2nd | 1.000 | 2.125 | 24" | 20" | 22" | 384 | 238 |
| 18 - 30 | 22' | | 105 | | | 1.000 | 2.125 | | 13" | 14" | 804 | 275 |
| | 24' | | 110 | D.R. - 3.75 | | 1.125 | 2.625 | 23" | 15" | 17" | 978 | 300 |

### 30 PSF DESIGN LOAD

| Headplate Size | Door Opening Width Including | Std./Wind Bar | Guide Ass'y No. | Slat Length | Windlock Freqency | Slip | Wind Bar Location | Bolt Spacing Steel Jambs | Bolt Spacing Concrete Jambs 3000 PSI | Bolt Spacing Concrete Jambs 4000 PSI | Guide Load FX Lbs./Ft. | Guide Load FY Lbs./Ft. |
|---|---|---|---|---|---|---|---|---|---|---|---|---|
| 12 - 16 | 14'-1" | Std. | 92 | D.R. - 2.00 | N/A | N/A | N/A | 24" | 14" | 16" | 0 | 212 |
| 18 - 22 | | | 93 | D.R. - 2.25 | | | | 24" | 14" | 16" | | |
| 24 - 30 | | | 94 | D.R. - 2.75 | | | | 24" | 14" | 16" | | |
| 16 - 30 | 17' | Wind Bar | 111 | D.R. - 3.00 | 2nd | 1.000 | 2.125 | 24" | 22" | 24" | 239 | 255 |
| 18 - 30 | 20' | | 105 | | | 1.000 | 2.125 | 19" | 13" | 14" | 754 | 300 |
| | 24' | | 107 | D.R. - 3.75 | | 1.125 | 2.625 | 19" | 12" | 13" | 1255 | 360 |

### 35 PSF DESIGN LOAD

| Headplate Size | Door Opening Width Including | Std./Wind Bar | Guide Ass'y No. | Slat Length | Windlock Freqency | Slip | Wind Bar Location | Bolt Spacing Steel Jambs | Bolt Spacing Concrete Jambs 3000 PSI | Bolt Spacing Concrete Jambs 4000 PSI | Guide Load FX Lbs./Ft. | Guide Load FY Lbs./Ft. |
|---|---|---|---|---|---|---|---|---|---|---|---|---|
| 12 - 16 | 13'-0" | Std. | 92 | D.R. - 2.00 | N/A | N/A | N/A | 24" | 13" | 15" | 0 | 228 |
| 18 - 22 | | | 93 | D.R. - 2.25 | | | | 24" | 13" | 15" | | |
| 24 - 30 | | | 94 | D.R. - 2.75 | | | | 24" | 13" | 15" | | |
| 16 - 30 | 16' | Wind Bar | 111 | D.R. - 3.00 | 2nd | 1.000 | 2.125 | 24" | 22" | 24" | 202 | 280 |
| 18 - 30 | 19' | | 105 | | | 1.000 | 2.125 | 22" | 12" | 13" | 799 | 333 |
| | 22' | | 107 | D.R. - 3.75 | | 1.125 | 2.625 | 19" | 12" | 13" | 1217 | 385 |
| | 24' | | 104 | D.R. - 4.25 | | 2.062 | 3.812 | 16" | N/A | 11" | 1025 | 420 |

### 40 PSF DESIGN LOAD

| Headplate Size | Door Opening Width Including | Std./Wind Bar | Guide Ass'y No. | Slat Length | Windlock Freqency | Slip | Wind Bar Location | Bolt Spacing Steel Jambs | Bolt Spacing Concrete Jambs 3000 PSI | Bolt Spacing Concrete Jambs 4000 PSI | Guide Load FX Lbs./Ft. | Guide Load FY Lbs./Ft. |
|---|---|---|---|---|---|---|---|---|---|---|---|---|
| 12 - 16 | 12'-2" | Std. | 92 | D.R. - 2.00 | N/A | N/A | N/A | 24" | 12" | 14" | 0 | 244 |
| 18 - 22 | | | 93 | D.R. - 2.25 | | | | 24" | 12" | 14" | | |
| 24 - 30 | | | 94 | D.R. - 2.75 | | | | 24" | 12" | 14" | | |
| 16 - 30 | 15' | Wind Bar | 111 | D.R. - 3.00 | 2nd | 0.875 | 2.000 | 24" | 20" | 22" | 198 | 300 |
| 18 - 30 | 18' | | 105 | | | 1.000 | 2.125 | 21" | 11" | 13" | 802 | 360 |
| | 20' | | 107 | D.R. - 3.75 | | 1.125 | 2.625 | 19" | 12" | 13" | 1099 | 400 |
| | 22' | | 104 | D.R. - 4.25 | | 2.062 | 3.812 | 16" | N/A | 11" | 952 | 440 |
| | 23' | | 106 | | | 1.875 | 3.625 | 14" | N/A | N/A | 1167 | 460 |

### 45 PSF DESIGN LOAD

| Headplate Size | Door Opening Width Including | Std./Wind Bar | Guide Ass'y No. | Slat Length | Windlock Freqency | Slip | Wind Bar Location | Bolt Spacing Steel Jambs | Bolt Spacing Concrete Jambs 3000 PSI | Bolt Spacing Concrete Jambs 4000 PSI | Guide Load FX Lbs./Ft. | Guide Load FY Lbs./Ft. |
|---|---|---|---|---|---|---|---|---|---|---|---|---|
| 12 - 16 | 9'-2" | Std. | 92 | D.R. - 2.00 | N/A | N/A | N/A | 24" | 15" | 16" | 0 | 207 |
| 18 - 22 | | | 93 | D.R. - 2.25 | | | | 24" | 15" | 16" | | |
| 24 - 30 | | | 94 | D.R. - 2.75 | | | | 24" | 15" | 16" | | |
| 16 - 30 | 14' | Wind Bar | 111 | D.R. - 3.00 | 2nd | 0.875 | 2.000 | 24" | 22" | 24" | 61 | 315 |
| 18 - 30 | 17' | | 105 | | | 1.000 | 2.125 | 20" | 11" | 12" | 764 | 383 |
| | 19' | | 107 | D.R. - 3.75 | | 1.125 | 2.625 | 19" | 12" | 13" | 1106 | 428 |
| | 20' | | 104 | D.R. - 4.25 | | 2.062 | 3.812 | 17" | 11" | 12" | 814 | 450 |
| | 22' | | 106 | | | 1.875 | 3.625 | 14" | N/A | N/A | 1210 | 495 |

### 50 PSF DESIGN LOAD

| Headplate Size | Door Opening Width Including | Std./Wind Bar | Guide Ass'y No. | Slat Length | Windlock Freqency | Slip | Wind Bar Location | Bolt Spacing Steel Jambs | Bolt Spacing Concrete Jambs 3000 PSI | Bolt Spacing Concrete Jambs 4000 PSI | Guide Load FX Lbs./Ft. | Guide Load FY Lbs./Ft. |
|---|---|---|---|---|---|---|---|---|---|---|---|---|
| 12 - 16 | 8'-9" | Std. | 92 | D.R. - 2.00 | N/A | N/A | N/A | 24" | 14" | 15" | 0 | 219 |
| 18 - 22 | | | 93 | D.R. - 2.25 | | | | 24" | 14" | 15" | | |
| 24 - 30 | | | 94 | D.R. - 2.75 | | | | 24" | 14" | 15" | | |
| 16 - 30 | 13' | Wind Bar | 111 | D.R. - 3.00 | 2nd | 0.750 | 1.875 | 24" | 24" | 24" | 0 | 325 |
| 18 - 30 | 16' | | 105 | | | 1.000 | 2.125 | 21" | 12" | 13" | 682 | 400 |
| | 18' | | 107 | D.R. - 3.75 | | 1.125 | 2.625 | 18" | 12" | 13" | 1075 | 450 |
| | 19' | | 104 | D.R. - 4.25 | | 2.062 | 3.812 | 17" | N/A | 11" | 791 | 475 |
| | 21' | | 106 | | | 1.937 | 3.687 | 13" | N/A | N/A | 1196 | 525 |

### 55 PSF DESIGN LOAD

| Headplate Size | Door Opening Width Including | Std./Wind Bar | Guide Ass'y No. | Slat Length | Windlock Freqency | Slip | Wind Bar Location | Bolt Spacing Steel Jambs | Bolt Spacing Concrete Jambs 3000 PSI | Bolt Spacing Concrete Jambs 4000 PSI | Guide Load FX Lbs./Ft. | Guide Load FY Lbs./Ft. |
|---|---|---|---|---|---|---|---|---|---|---|---|---|
| 12 - 16 | 8'-4" | Std. | 92 | D.R. - 2.00 | N/A | N/A | N/A | 24" | 13" | 14" | 0 | 230 |
| 18 - 22 | | | 93 | D.R. - 2.25 | | | | 24" | 13" | 14" | | |
| 24 - 30 | | | 94 | D.R. - 2.75 | | | | 24" | 13" | 14" | | |
| 16 - 30 | 13' | Wind Bar | 111 | D.R. - 3.00 | 2nd | 0.750 | 1.875 | 24" | 19" | 21" | 98 | 358 |
| 18 - 30 | 15' | | 105 | | | 1.000 | 2.125 | 22" | 12" | 14" | 554 | 413 |
| | 17' | | 107 | D.R. - 3.75 | | 1.125 | 2.625 | 19" | 12" | 13" | 1004 | 468 |
| | 18' | | 104 | D.R. - 4.25 | | 2.062 | 3.812 | 17" | N/A | 11" | 737 | 495 |
| | 20' | | 106 | | | 1.937 | 3.687 | 13" | N/A | N/A | 1180 | 550 |

### 60 PSF DESIGN LOAD

| Headplate Size | Door Opening Width Including | Std./Wind Bar | Guide Ass'y No. | Slat Length | Wind Bar Location | Slip | Wind Bar Location | Bolt Spacing Steel Jambs | Bolt Spacing Concrete Jambs 3000 PSI | Bolt Spacing Concrete Jambs 4000 PSI | Guide Load FX Lbs./Ft. | Guide Load FY Lbs./Ft. |
|---|---|---|---|---|---|---|---|---|---|---|---|---|
| 12 - 16 | 8'-0" | Std. | 92 | D.R. - 2.00 | N/A | N/A | N/A | 24" | 13" | 14" | 0 | 240 |
| 18 - 22 | | | 93 | D.R. - 2.25 | | | | 24" | 13" | 14" | | |
| 24 - 30 | | | 94 | D.R. - 2.75 | | | | 24" | 13" | 14" | | |
| 16 - 30 | 12' | Wind Bar | 111 | D.R. - 3.00 | 2nd | 0.562 | 1.687 | 24" | 19" | 21" | 32 | 360 |
| 18 - 30 | 15' | | 105 | | | 1.000 | 2.125 | 19" | 11" | 12" | 699 | 450 |
| | 16' | | 107 | D.R. - 3.75 | | 1.125 | 2.625 | 19" | 12" | 14" | 893 | 480 |

STATE OF TEXAS
RICHARD A. BAUMANN
85227
LICENSED PROFESSIONAL ENGINEER
5-3-2017

| | | | |
|---|---|---|---|
| SCALE: None | RAYNOR 1101 EAST RIVER ROAD DIXON, IL 61021 | TITLE: Specifications, Windload Doors For Texas Approvals | |
| DRAWN BY: M. Reutzel | | | |
| CHECKED BY: J. Bonnell | | | |
| DATE: 07/21/2016 | | NO. P-2262 | SHEET 7 / REV A |
| ECN. NO.: 7415.01 | | | |

# DuraCoil - Insulated Flat Slat 20 Ga.

Notes:
D.R. = Design Reference
N/A = Not Applicable

## 20 PSF DESIGN LOAD

| Headplate Size | Door Opening Width Including | Std./Wind Bar | Guide Ass'y No. | Slat Length | Windlock Freqency | Slip | Wind Bar Location | Bolt Spacing Steel Jambs | Bolt Spacing Concrete Jambs 3000 PSI | Bolt Spacing Concrete Jambs 4000 PSI | Guide Load FX Lbs./Ft. | Guide Load FY Lbs./Ft. |
|---|---|---|---|---|---|---|---|---|---|---|---|---|
| 12 - 16 | 17'-9" | Std. | 92 | D.R. - 2.00 | N/A | N/A | N/A | 24" | 17" | 19" | 0 | 178 |
| 18 - 22 | | | 93 | D.R. - 2.25 | | | | 24" | 17" | 19" | | |
| 24 - 30 | | | 94 | D.R. - 2.75 | | | | 24" | 17" | 19" | | |
| 16 - 30 | 22" | Wind Bar | 111 | D.R. - 3.00 | 2nd | 1.000 | 2.125 | 24" | 19" | 21" | 495 | 220 |
| 18 - 30 | 28" | | 110 | D.R. - 3.75 | | 1.125 | 2.625 | 23" | 15" | 16" | 1065 | 280 |
| | 32" | | 107 | | | 1.125 | 2.625 | 17" | 11" | 12" | 1453 | 320 |

## 25 PSF DESIGN LOAD

| Headplate Size | Door Opening Width Including | Std./Wind Bar | Guide Ass'y No. | Slat Length | Windlock Freqency | Slip | Wind Bar Location | Bolt Spacing Steel Jambs | Bolt Spacing Concrete Jambs 3000 PSI | Bolt Spacing Concrete Jambs 4000 PSI | Guide Load FX Lbs./Ft. | Guide Load FY Lbs./Ft. |
|---|---|---|---|---|---|---|---|---|---|---|---|---|
| 12 - 16 | 15'-10" | Std. | 92 | D.R. - 2.00 | N/A | N/A | N/A | 24" | 15" | 17" | 0 | 198 |
| 18 - 22 | | | 93 | D.R. - 2.25 | | | | 24" | 15" | 17" | | |
| 24 - 30 | | | 94 | D.R. - 2.75 | | | | 24" | 15" | 17" | | |
| 16 - 30 | 19" | Wind Bar | 111 | D.R. - 3.00 | 2nd | 1.000 | 2.125 | 24" | 21" | 23" | 316 | 238 |
| 18 - 30 | 22" | | 105 | | | 1.000 | 2.125 | | 13" | 15" | 753 | 275 |
| | 25" | | 110 | D.R. - 3.75 | | 1.125 | 2.625 | 22" | 14" | 15" | 1057 | 313 |
| | 29" | | 107 | | | 1.125 | 2.625 | 16" | N/A | 11" | 1532 | 363 |
| | 34" | | 106 | D.R. - 4.25 | | 1.937 | 3.687 | 12" | N/A | N/A | 1556 | 425 |

## 30 PSF DESIGN LOAD

| Headplate Size | Door Opening Width Including | Std./Wind Bar | Guide Ass'y No. | Slat Length | Windlock Freqency | Slip | Wind Bar Location | Bolt Spacing Steel Jambs | Bolt Spacing Concrete Jambs 3000 PSI | Bolt Spacing Concrete Jambs 4000 PSI | Guide Load FX Lbs./Ft. | Guide Load FY Lbs./Ft. |
|---|---|---|---|---|---|---|---|---|---|---|---|---|
| 12 - 16 | 14'-6" | Std. | 92 | D.R. - 2.00 | N/A | N/A | N/A | 24" | 14" | 15" | 0 | 218 |
| 18 - 22 | | | 93 | D.R. - 2.25 | | | | 24" | 14" | 15" | | |
| 24 - 30 | | | 94 | D.R. - 2.75 | | | | 24" | 14" | 15" | | |
| 16 - 30 | 18" | Wind Bar | 111 | D.R. - 3.00 | 2nd | 1.000 | 2.125 | 24" | 19" | 21" | 344 | 270 |
| 18 - 30 | 21" | | 105 | | | 1.000 | 2.125 | 21" | 12" | 13" | 854 | 315 |
| | 24" | | 107 | D.R. - 3.75 | | 1.125 | 2.625 | 19" | 12" | 13" | 1212 | 360 |
| | 26" | | 104 | D.R. - 4.25 | | 2.062 | 3.812 | 17" | N/A | 11" | 1001 | 390 |
| | 31" | | 106 | | | 1.937 | 3.687 | 12" | N/A | N/A | 1590 | 465 |

## 35 PSF DESIGN LOAD

| Headplate Size | Door Opening Width Including | Std./Wind Bar | Guide Ass'y No. | Slat Length | Windlock Freqency | Slip | Wind Bar Location | Bolt Spacing Steel Jambs | Bolt Spacing Concrete Jambs 3000 PSI | Bolt Spacing Concrete Jambs 4000 PSI | Guide Load FX Lbs./Ft. | Guide Load FY Lbs./Ft. |
|---|---|---|---|---|---|---|---|---|---|---|---|---|
| 12 - 16 | 13'-5" | Std. | 92 | D.R. - 2.00 | N/A | N/A | N/A | 24" | 13" | 14" | 0 | 235 |
| 18 - 22 | | | 93 | D.R. - 2.25 | | | | 24" | 13" | 14" | | |
| 24 - 30 | | | 94 | D.R. - 2.75 | | | | 24" | 13" | 14" | | |
| 16 - 30 | 16" | Wind Bar | 111 | D.R. - 3.00 | 2nd | 1.000 | 2.125 | 24" | 24" | 24" | 105 | 280 |
| 18 - 30 | 19" | | 105 | | | 1.000 | 2.125 | 22" | 12" | 14" | 730 | 333 |
| | 22" | | 107 | D.R. - 3.75 | | 1.125 | 2.625 | 19" | 12" | 13" | 1166 | 385 |
| | 24" | | 104 | D.R. - 4.25 | | 2.062 | 3.812 | 16" | N/A | 11" | 982 | 420 |
| | 28" | | 106 | | | 1.937 | 3.687 | 12" | N/A | N/A | 1532 | 490 |

## 40 PSF DESIGN LOAD

| Headplate Size | Door Opening Width Including | Std./Wind Bar | Guide Ass'y No. | Slat Length | Windlock Freqency | Slip | Wind Bar Location | Bolt Spacing Steel Jambs | Bolt Spacing Concrete Jambs 3000 PSI | Bolt Spacing Concrete Jambs 4000 PSI | Guide Load FX Lbs./Ft. | Guide Load FY Lbs./Ft. |
|---|---|---|---|---|---|---|---|---|---|---|---|---|
| 12 - 16 | 12'-6" | Std. | 92 | D.R. - 2.00 | N/A | N/A | N/A | 24" | 12" | 13" | 0 | 250 |
| 18 - 22 | | | 93 | D.R. - 2.25 | | | | 24" | 12" | 13" | | |
| 24 - 30 | | | 94 | D.R. - 2.75 | | | | 24" | 12" | 13" | | |
| 16 - 30 | 15" | Wind Bar | 111 | D.R. - 3.00 | 2nd | 1.000 | 2.125 | 24" | 24" | 24" | 7 | 300 |
| 18 - 30 | 18" | | 105 | | | 1.000 | 2.125 | 21" | 12" | 13" | 725 | 360 |
| | 20" | | 107 | D.R. - 3.75 | | 1.125 | 2.625 | 20" | 13" | 14" | 1037 | 400 |
| | 22" | | 104 | D.R. - 4.25 | | 2.062 | 3.812 | 16" | N/A | 11" | 900 | 440 |
| | 26" | | 106 | | | 1.937 | 3.687 | 12" | N/A | N/A | 1521 | 520 |

## 45 PSF DESIGN LOAD

| Headplate Size | Door Opening Width Including | Std./Wind Bar | Guide Ass'y No. | Slat Length | Windlock Freqency | Slip | Wind Bar Location | Bolt Spacing Steel Jambs | Bolt Spacing Concrete Jambs 3000 PSI | Bolt Spacing Concrete Jambs 4000 PSI | Guide Load FX Lbs./Ft. | Guide Load FY Lbs./Ft. |
|---|---|---|---|---|---|---|---|---|---|---|---|---|
| 12 - 16 | 10'-10" | Std. | 92 | D.R. - 2.00 | N/A | N/A | N/A | 24" | 12" | 14" | 0 | 244 |
| 18 - 22 | | | 93 | D.R. - 2.25 | | | | 24" | 12" | 14" | | |
| 24 - 30 | | | 94 | D.R. - 2.75 | | | | 24" | 12" | 14" | | |
| 16 - 30 | 15" | Wind Bar | 111 | D.R. - 3.00 | 2nd | 1.000 | 2.125 | 24" | 19" | 21" | 152 | 338 |
| 18 - 30 | 17" | | 105 | | | 1.000 | 2.125 | 21" | 12" | 13" | 678 | 383 |
| | 19" | | 107 | D.R. - 3.75 | | 1.125 | 2.625 | 19" | 12" | 13" | 1037 | 428 |
| | 20" | | 104 | D.R. - 4.25 | | 2.062 | 3.812 | 18" | N/A | 12" | 752 | 450 |
| | 24" | | 106 | | | 1.937 | 3.687 | 12" | N/A | N/A | 1450 | 540 |

## 50 PSF DESIGN LOAD

| Headplate Size | Door Opening Width Including | Std./Wind Bar | Guide Ass'y No. | Slat Length | Windlock Freqency | Slip | Wind Bar Location | Bolt Spacing Steel Jambs | Bolt Spacing Concrete Jambs 3000 PSI | Bolt Spacing Concrete Jambs 4000 PSI | Guide Load FX Lbs./Ft. | Guide Load FY Lbs./Ft. |
|---|---|---|---|---|---|---|---|---|---|---|---|---|
| 12 - 16 | 10'-3" | Std. | 92 | D.R. - 2.00 | N/A | N/A | N/A | 24" | 12" | 13" | 0 | 257 |
| 18 - 22 | | | 93 | D.R. - 2.25 | | | | 24" | 12" | 13" | | |
| 24 - 30 | | | 94 | D.R. - 2.75 | | | | 24" | 12" | 13" | | |
| 16 - 30 | 14" | Wind Bar | 111 | D.R. - 3.00 | 2nd | 0.937 | 2.062 | 24" | 21" | 23" | 27 | 350 |
| 18 - 30 | 16" | | 105 | | | 1.000 | 2.125 | 22" | 12" | 13" | 585 | 400 |
| | 18" | | 107 | D.R. - 3.75 | | 1.125 | 2.625 | 19" | 12" | 13" | 998 | 450 |
| | 19" | | 104 | D.R. - 4.25 | | 2.062 | 3.812 | 17" | 11" | 12" | 722 | 475 |
| | 23" | | 106 | | | 1.937 | 3.687 | 11" | N/A | N/A | 1490 | 575 |

## 55 PSF DESIGN LOAD

| Headplate Size | Door Opening Width Including | Std./Wind Bar | Guide Ass'y No. | Slat Length | Windlock Freqency | Slip | Wind Bar Location | Bolt Spacing Steel Jambs | Bolt Spacing Concrete Jambs 3000 PSI | Bolt Spacing Concrete Jambs 4000 PSI | Guide Load FX Lbs./Ft. | Guide Load FY Lbs./Ft. |
|---|---|---|---|---|---|---|---|---|---|---|---|---|
| 12 - 16 | 9'-4" | Std. | 92 | D.R. - 2.00 | N/A | N/A | N/A | 24" | 12" | 13" | 0 | 257 |
| 18 - 22 | | | 93 | D.R. - 2.25 | | | | 24" | 12" | 13" | | |
| 24 - 30 | | | 94 | D.R. - 2.75 | | | | 24" | 12" | 13" | | |
| 16 - 30 | 13" | Wind Bar | 111 | D.R. - 3.00 | 2nd | 0.750 | 1.875 | 24" | 22" | 23" | 0 | 358 |
| 18 - 30 | 15" | | 105 | | | 1.000 | 2.125 | 23" | 13" | 13" | 443 | 413 |
| | 17" | | 107 | D.R. - 3.75 | | 1.125 | 2.625 | 19" | 12" | 13" | 918 | 468 |
| | 18" | | 104 | D.R. - 4.25 | | 2.062 | 3.812 | 17" | 11" | 12" | 661 | 495 |
| | 20" | | 106 | | | 1.937 | 3.687 | 12" | N/A | N/A | 1118 | 550 |

## 60 PSF DESIGN LOAD

| Headplate Size | Door Opening Width Including | Std./Wind Bar | Guide Ass'y No. | Slat Length | Wind Bar Location | Slip | Wind Bar Location | Bolt Spacing Steel Jambs | Bolt Spacing Concrete Jambs 3000 PSI | Bolt Spacing Concrete Jambs 4000 PSI | Guide Load FX Lbs./Ft. | Guide Load FY Lbs./Ft. |
|---|---|---|---|---|---|---|---|---|---|---|---|---|
| 12 - 16 | 8'-7" | Std. | 92 | D.R. - 2.00 | N/A | N/A | N/A | 24" | 12" | 13" | 0 | 258 |
| 18 - 22 | | | 93 | D.R. - 2.25 | | | | 24" | 12" | 13" | | |
| 24 - 30 | | | 94 | D.R. - 2.75 | | | | 24" | 12" | 13" | | |
| 16 - 30 | 12" | Wind Bar | 111 | D.R. - 3.00 | 2nd | 0.562 | 1.687 | 24" | 22" | 24" | 0 | 360 |
| 18 - 30 | 14" | | 105 | | | 0.937 | 2.062 | 24" | 14" | 16" | 298 | 420 |
| | 16" | | 107 | D.R. - 3.75 | | 1.125 | 2.625 | 20" | 13" | 14" | 795 | 480 |

5-3-2017

| | | | |
|---|---|---|---|
| SCALE None | RAYNOR 1101 EAST RIVER ROAD DIXON, IL 61021 | TITLE: Specifications, Windload Doors For Texas Approvals | |
| DRAWN BY M. Reutzel | | NO. P-2262 | SHEET 8 / REV A |
| CHECKED BY J. Bonnell | | | |
| DATE 07/21/2016 | | | |
| ECN NO. 741501 | | | |

# DuraCoil - Insulated Flat Slat 18 Ga.

Notes:
D.R. = Design Reference
N/A = Not Applicable

## 20 PSF DESIGN LOAD

| Headplate Size | Door Opening Width Including | Std./Wind Bar | Guide Ass'y No. | Slat Length | Windlock Freqency | Slip | Wind Bar Location | Bolt Spacing Steel Jambs | Bolt Spacing Concrete Jambs 3000 PSI | Bolt Spacing Concrete Jambs 4000 PSI | Guide Load FX Lbs./Ft. | Guide Load FY Lbs./Ft. |
|---|---|---|---|---|---|---|---|---|---|---|---|---|
| 12 - 16 | 18'-5" | Std. | 92 | D.R. - 2.00 | N/A | N/A | N/A | 24" | 17" | 18" | 0 | 184 |
| 18 - 22 | | | 93 | D.R. - 2.25 | | | | 24" | 17" | 18" | | |
| 24 - 30 | | | 94 | D.R. - 2.75 | | | | 24" | 17" | 18" | | |
| 16 - 30 | 22' | Wind Bar | 111 | D.R. - 3.00 | 2nd | 1.000 | 2.125 | 24" | 20" | 22" | 411 | 220 |
| 18 - 30 | 29' | | 110 | D.R. - 3.75 | | 1.125 | 2.625 | 22" | 14" | 15" | 1115 | 290 |
| | 31' | | 107 | | | 1.125 | 2.625 | 18" | 12" | 13" | 1314 | 310 |
| | 34' | | 104 | D.R. - 4.25 | | 2.062 | 3.812 | 17" | N/A | 11" | 1121 | 340 |
| | 40' | | 106 | | | 1.937 | 3.687 | 12" | N/A | N/A | 1630 | 400 |

## 25 PSF DESIGN LOAD

| Headplate Size | Door Opening Width Including | Std./Wind Bar | Guide Ass'y No. | Slat Length | Windlock Freqency | Slip | Wind Bar Location | Bolt Spacing Steel Jambs | Bolt Spacing Concrete Jambs 3000 PSI | Bolt Spacing Concrete Jambs 4000 PSI | Guide Load FX Lbs./Ft. | Guide Load FY Lbs./Ft. |
|---|---|---|---|---|---|---|---|---|---|---|---|---|
| 12 - 16 | 16'-6" | Std. | 92 | D.R. - 2.00 | N/A | N/A | N/A | 24" | 15" | 16" | 0 | 207 |
| 18 - 22 | | | 93 | D.R. - 2.25 | | | | 24" | 15" | 16" | | |
| 24 - 30 | | | 94 | D.R. - 2.75 | | | | 24" | 15" | 16" | | |
| 16 - 30 | 20' | Wind Bar | 111 | D.R. - 3.00 | 2nd | 1.000 | 2.125 | 24" | 19" | 21" | 366 | 250 |
| 18 - 30 | 22' | | 105 | | | 1.000 | 2.125 | | 14" | 15" | 669 | 275 |
| | 25' | | 110 | D.R. - 3.75 | | 1.125 | 2.625 | 23" | 15" | 16" | 992 | 313 |
| | 27' | | 107 | | | 1.125 | 2.625 | 19" | 12" | 13" | 1241 | 338 |
| | 30' | | 104 | D.R. - 4.25 | | 2.062 | 3.812 | 16" | N/A | 11" | 1096 | 375 |
| | 35' | | 106 | | | 1.937 | 3.687 | 12" | N/A | N/A | 1614 | 438 |

## 30 PSF DESIGN LOAD

| Headplate Size | Door Opening Width Including | Std./Wind Bar | Guide Ass'y No. | Slat Length | Windlock Freqency | Slip | Wind Bar Location | Bolt Spacing Steel Jambs | Bolt Spacing Concrete Jambs 3000 PSI | Bolt Spacing Concrete Jambs 4000 PSI | Guide Load FX Lbs./Ft. | Guide Load FY Lbs./Ft. |
|---|---|---|---|---|---|---|---|---|---|---|---|---|
| 12 - 16 | 15'-1" | Std. | 92 | D.R. - 2.00 | N/A | N/A | N/A | 24" | 13" | 15" | 0 | 227 |
| 18 - 22 | | | 93 | D.R. - 2.25 | | | | 24" | 13" | 15" | | |
| 24 - 30 | | | 94 | D.R. - 2.75 | | | | 24" | 13" | 15" | | |
| 16 - 30 | 18' | Wind Bar | 111 | D.R. - 3.00 | 2nd | 1.000 | 2.125 | 24" | 21" | 23" | 217 | 270 |
| 18 - 30 | 21' | | 105 | | | 1.000 | 2.125 | 22" | 12" | 14" | 762 | 315 |
| | 24' | | 107 | D.R. - 3.75 | | 1.125 | 2.625 | 20" | 12" | 14" | 1141 | 360 |
| | 26' | | 104 | D.R. - 4.25 | | 2.062 | 3.812 | 17" | N/A | 11" | 940 | 390 |
| | 33' | | 106 | | | 1.937 | 3.687 | 11" | N/A | N/A | 1767 | 495 |

## 35 PSF DESIGN LOAD

| Headplate Size | Door Opening Width Including | Std./Wind Bar | Guide Ass'y No. | Slat Length | Windlock Freqency | Slip | Wind Bar Location | Bolt Spacing Steel Jambs | Bolt Spacing Concrete Jambs 3000 PSI | Bolt Spacing Concrete Jambs 4000 PSI | Guide Load FX Lbs./Ft. | Guide Load FY Lbs./Ft. |
|---|---|---|---|---|---|---|---|---|---|---|---|---|
| 12 - 16 | 13'-11" | Std. | 92 | D.R. - 2.00 | N/A | N/A | N/A | 24" | 12" | 14" | 0 | 244 |
| 18 - 22 | | | 93 | D.R. - 2.25 | | | | 24" | 12" | 14" | | |
| 24 - 30 | | | 94 | D.R. - 2.75 | | | | 24" | 12" | 14" | | |
| 16 - 30 | 17' | Wind Bar | 111 | D.R. - 3.00 | 2nd | 1.000 | 2.125 | 24" | 20" | 22" | 186 | 298 |
| 18 - 30 | 19' | | 105 | | | 1.000 | 2.125 | 24" | 13" | 14" | 616 | 333 |
| | 22' | | 107 | D.R. - 3.75 | | 1.125 | 2.625 | 20" | 12" | 14" | 1051 | 385 |
| | 24' | | 104 | D.R. - 4.25 | | 2.062 | 3.812 | 17" | N/A | 11" | 956 | 420 |
| | 30' | | 106 | | | 1.937 | 3.687 | 11" | N/A | N/A | 1732 | 525 |

## 40 PSF DESIGN LOAD

| Headplate Size | Door Opening Width Including | Std./Wind Bar | Guide Ass'y No. | Slat Length | Windlock Freqency | Slip | Wind Bar Location | Bolt Spacing Steel Jambs | Bolt Spacing Concrete Jambs 3000 PSI | Bolt Spacing Concrete Jambs 4000 PSI | Guide Load FX Lbs./Ft. | Guide Load FY Lbs./Ft. |
|---|---|---|---|---|---|---|---|---|---|---|---|---|
| 12 - 16 | 12'-11" | Std. | 92 | D.R. - 2.00 | N/A | N/A | N/A | 24" | 12" | 13" | 0 | 259 |
| 18 - 22 | | | 93 | D.R. - 2.25 | | | | 24" | 12" | 13" | | |
| 24 - 30 | | | 94 | D.R. - 2.75 | | | | 24" | 12" | 13" | | |
| 16 - 30 | 16' | Wind Bar | 111 | D.R. - 3.00 | 2nd | 1.000 | 2.125 | 24" | 21" | 23" | 105 | 320 |
| 18 - 30 | 18' | | 105 | | | 1.000 | 2.125 | 23" | 13" | 14" | 599 | 360 |
| | 21' | | 107 | D.R. - 3.75 | | 1.125 | 2.625 | 18" | 12" | 13" | 1133 | 420 |
| | 22' | | 104 | D.R. - 4.25 | | 2.062 | 3.812 | 17" | 11" | 12" | 816 | 440 |
| | 27' | | 106 | | | 1.937 | 3.687 | 11" | N/A | N/A | 1604 | 540 |

## 45 PSF DESIGN LOAD

| Headplate Size | Door Opening Width Including | Std./Wind Bar | Guide Ass'y No. | Slat Length | Windlock Freqency | Slip | Wind Bar Location | Bolt Spacing Steel Jambs | Bolt Spacing Concrete Jambs 3000 PSI | Bolt Spacing Concrete Jambs 4000 PSI | Guide Load FX Lbs./Ft. | Guide Load FY Lbs./Ft. |
|---|---|---|---|---|---|---|---|---|---|---|---|---|
| 12 - 16 | 11'-6" | Std. | 92 | D.R. - 2.00 | N/A | N/A | N/A | 24" | 12" | 13" | 0 | 259 |
| 18 - 22 | | | 93 | D.R. - 2.25 | | | | 24" | 12" | 13" | | |
| 24 - 30 | | | 94 | D.R. - 2.75 | | | | 24" | 12" | 13" | | |
| 16 - 30 | 15' | Wind Bar | 111 | D.R. - 3.00 | 2nd | 1.000 | 2.125 | 24" | 23" | 24" | 0 | 338 |
| 18 - 30 | 17' | | 105 | | | 1.000 | 2.125 | 23" | 13" | 14" | 537 | 383 |
| | 19' | | 107 | D.R. - 3.75 | | 1.125 | 2.625 | 20" | 13" | 14" | 924 | 428 |
| | 21' | | 104 | D.R. - 4.25 | | 2.062 | 3.812 | 16" | N/A | 11" | 826 | 473 |
| | 25' | | 106 | | | 1.937 | 3.687 | 11" | N/A | N/A | 1540 | 563 |

## 50 PSF DESIGN LOAD

| Headplate Size | Door Opening Width Including | Std./Wind Bar | Guide Ass'y No. | Slat Length | Windlock Freqency | Slip | Wind Bar Location | Bolt Spacing Steel Jambs | Bolt Spacing Concrete Jambs 3000 PSI | Bolt Spacing Concrete Jambs 4000 PSI | Guide Load FX Lbs./Ft. | Guide Load FY Lbs./Ft. |
|---|---|---|---|---|---|---|---|---|---|---|---|---|
| 12 - 16 | 10'-4" | Std. | 92 | D.R. - 2.00 | N/A | N/A | N/A | 24" | 12" | 13" | 0 | 259 |
| 18 - 22 | | | 93 | D.R. - 2.25 | | | | 24" | 12" | 13" | | |
| 24 - 30 | | | 94 | D.R. - 2.75 | | | | 24" | 12" | 13" | | |
| 16 - 30 | 14' | Wind Bar | 111 | D.R. - 3.00 | 2nd | 0.937 | 2.062 | 24" | 24" | 24" | 0 | 350 |
| 18 - 30 | 16' | | 105 | | | 1.000 | 2.125 | 23" | 13" | 15" | 425 | 400 |
| | 18' | | 107 | D.R. - 3.75 | | 1.125 | 2.625 | 20" | 13" | 14" | 872 | 450 |
| | 20' | | 104 | D.R. - 4.25 | | 2.062 | 3.812 | 16" | N/A | 11" | 805 | 500 |
| | 24' | | 106 | | | 1.937 | 3.687 | 11" | N/A | N/A | 1590 | 600 |

## 55 PSF DESIGN LOAD

| Headplate Size | Door Opening Width Including | Std./Wind Bar | Guide Ass'y No. | Slat Length | Windlock Freqency | Slip | Wind Bar Location | Bolt Spacing Steel Jambs | Bolt Spacing Concrete Jambs 3000 PSI | Bolt Spacing Concrete Jambs 4000 PSI | Guide Load FX Lbs./Ft. | Guide Load FY Lbs./Ft. |
|---|---|---|---|---|---|---|---|---|---|---|---|---|
| 12 - 16 | 9'-4" | Std. | 92 | D.R. - 2.00 | N/A | N/A | N/A | 24" | 12" | 13" | 0 | 257 |
| 18 - 22 | | | 93 | D.R. - 2.25 | | | | 24" | 12" | 13" | | |
| 24 - 30 | | | 94 | D.R. - 2.75 | | | | 24" | 12" | 13" | | |
| 16 - 30 | 14' | Wind Bar | 111 | D.R. - 3.00 | 2nd | 0.937 | 2.062 | 24" | 20" | 22" | 0 | 385 |
| 18 - 30 | 15' | | 105 | | | 1.000 | 2.125 | 24" | 15" | 16" | 261 | 413 |
| | 17' | | 107 | D.R. - 3.75 | | 1.125 | 2.625 | 20" | 13" | 14" | 777 | 468 |
| | 19' | | 104 | D.R. - 4.25 | | 2.062 | 3.812 | 16" | N/A | 11" | 753 | 523 |
| | 20' | | 106 | | | 1.937 | 3.687 | 11" | N/A | N/A | 941 | 550 |

## 60 PSF DESIGN LOAD

| Headplate Size | Door Opening Width Including | Std./Wind Bar | Guide Ass'y No. | Slat Length | Wind Bar Location | Slip | Wind Bar Location | Bolt Spacing Steel Jambs | Bolt Spacing Concrete Jambs 3000 PSI | Bolt Spacing Concrete Jambs 4000 PSI | Guide Load FX Lbs./Ft. | Guide Load FY Lbs./Ft. |
|---|---|---|---|---|---|---|---|---|---|---|---|---|
| 12 - 16 | 8'-7" | Std. | 92 | D.R. - 2.00 | N/A | N/A | N/A | 24" | 12" | 13" | 0 | 258 |
| 18 - 22 | | | 93 | D.R. - 2.25 | | | | 24" | 12" | 13" | | |
| 24 - 30 | | | 94 | D.R. - 2.75 | | | | 24" | 12" | 13" | | |
| 16 - 30 | 13' | Wind Bar | 111 | D.R. - 3.00 | 2nd | 0.750 | 1.875 | 24" | 22" | 24" | 0 | 390 |
| 18 - 30 | 15' | | 105 | | | 1.000 | 2.125 | 22" | 13" | 14" | 405 | 450 |
| | 16' | | 107 | D.R. - 3.75 | | 1.125 | 2.625 | 21" | 14" | 15" | 636 | 480 |

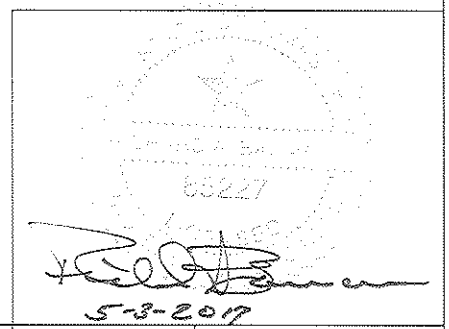


| | | | |
|---|---|---|---|
| SCALE: None | RAYNOR<br>1101 EAST RIVER ROAD<br>DIXON, IL 61021 | TITLE: Specifications, Windload Doors For Texas Approvals | |
| DRAWN BY: M. Routzel | | | |
| CHECKED BY: J. Bonnell | | | |
| DATE: 07/21/2016 | | NO. P-2262 | SHEET 9 / REV A |
| ECN NO. 7415.01 | | | |

# DuraCoil - Flat Slat 22 Ga.

Notes:
D.R. = Design Reference
N/A = Not Applicable

**20 PSF DESIGN LOAD**

| Headplate Size | Door Opening Width Including | Std./Wind Bar | Guide Ass'y No. | Slat Length | Windlock Freqency | Slip | Wind Bar Location | Bolt Spacing Steel Jambs | Bolt Spacing Concrete Jambs 3000 PSI | Bolt Spacing Concrete Jambs 4000 PSI | Guide Load FX Lbs./Ft. | Guide Load FY Lbs./Ft. |
|---|---|---|---|---|---|---|---|---|---|---|---|---|
| 12 - 16 | 14'-7" | Std. | 89 | D.R. - 2.00 | N/A | N/A | N/A | 24" | 21" | 23" | 0 | 146 |
| 18 - 22 | | | 90 | D.R. - 2.25 | | | | 24" | 21" | 23" | | |
| 24 - 30 | | | 91 | D.R. - 2.75 | | | | 24" | 18" | 20" | | |
| 16 - 30 | 20' | Wind Bar | 111 | D.R. - 3.00 | 2nd | 1.000 | 2.125 | 24" | 18" | 20" | 625 | 200 |
| 18 - 30 | 22' | | 105 | | | 1.000 | 2.125 | | 15" | 16" | 809 | 220 |

**25 PSF DESIGN LOAD**

| Headplate Size | Door Opening Width Including | Std./Wind Bar | Guide Ass'y No. | Slat Length | Windlock Freqency | Slip | Wind Bar Location | Bolt Spacing Steel Jambs | Bolt Spacing Concrete Jambs 3000 PSI | Bolt Spacing Concrete Jambs 4000 PSI | Guide Load FX Lbs./Ft. | Guide Load FY Lbs./Ft. |
|---|---|---|---|---|---|---|---|---|---|---|---|---|
| 12 - 16 | 13'-0" | Std. | 89 | D.R. - 2.00 | N/A | N/A | N/A | 24" | 19" | 21" | 0 | 163 |
| 18 - 22 | | | 90 | D.R. - 2.25 | | | | 24" | 19" | 21" | | |
| 24 - 30 | | | 91 | D.R. - 2.75 | | | | 24" | 16" | 18" | | |
| 16 - 30 | 17' | Wind Bar | 111 | D.R. - 3.00 | 2nd | 1.000 | 2.125 | 24" | 20" | 22" | 504 | 213 |
| 18 - 30 | 20' | | 105 | | | 1.000 | 2.125 | | 14" | 15" | 849 | 250 |
| | 22' | | 110 | D.R. - 3.75 | | 1.125 | 2.625 | | 16" | 17" | 994 | 275 |

**30 PSF DESIGN LOAD**

| Headplate Size | Door Opening Width Including | Std./Wind Bar | Guide Ass'y No. | Slat Length | Windlock Freqency | Slip | Wind Bar Location | Bolt Spacing Steel Jambs | Bolt Spacing Concrete Jambs 3000 PSI | Bolt Spacing Concrete Jambs 4000 PSI | Guide Load FX Lbs./Ft. | Guide Load FY Lbs./Ft. |
|---|---|---|---|---|---|---|---|---|---|---|---|---|
| 12 - 16 | 9'-10" | Std. | 89 | D.R. - 2.00 | N/A | N/A | N/A | 24" | 21" | 23" | 0 | 148 |
| 18 - 22 | | | 90 | D.R. - 2.25 | | | | 24" | 21" | 23" | | |
| 24 - 30 | | | 91 | D.R. - 2.75 | | | | 24" | 18" | 19" | | |
| 16 - 30 | 14' | Wind Bar | 111 | D.R. - 3.00 | 2nd | 0.625 | 1.750 | 24" | 21" | 23" | 444 | 210 |
| 18 - 30 | 18' | | 105 | | | 1.000 | 2.125 | | 14" | 15" | 813 | 270 |
| | 22' | | 107 | D.R. - 3.75 | | 1.125 | 2.625 | 20" | 13" | 14" | 1237 | 330 |

**35 PSF DESIGN LOAD**

| Headplate Size | Door Opening Width Including | Std./Wind Bar | Guide Ass'y No. | Slat Length | Windlock Freqency | Slip | Wind Bar Location | Bolt Spacing Steel Jambs | Bolt Spacing Concrete Jambs 3000 PSI | Bolt Spacing Concrete Jambs 4000 PSI | Guide Load FX Lbs./Ft. | Guide Load FY Lbs./Ft. |
|---|---|---|---|---|---|---|---|---|---|---|---|---|
| 12 - 16 | 9'-1" | Std. | 89 | D.R. - 2.00 | N/A | N/A | N/A | 24" | 19" | 21" | 0 | 159 |
| 18 - 22 | | | 90 | D.R. - 2.25 | | | | 24" | 19" | 21" | | |
| 24 - 30 | | | 91 | D.R. - 2.75 | | | | 24" | 16" | 18" | | |
| 16 - 30 | 12' | Wind Bar | 111 | D.R. - 3.00 | 2nd | 0.375 | 1.500 | 24" | 20" | 21" | 440 | 210 |
| 18 - 30 | 16' | | 105 | | | 0.875 | 2.000 | 24" | 14" | 15" | 777 | 280 |
| | 20' | | 107 | D.R. - 3.75 | | 1.125 | 2.625 | 20" | 13" | 14" | 1207 | 350 |
| | 22' | | 104 | D.R. - 4.25 | | 2.063 | 3.812 | 17" | N/A | 11" | 1035 | 385 |

**40 PSF DESIGN LOAD**

| Headplate Size | Door Opening Width Including | Std./Wind Bar | Guide Ass'y No. | Slat Length | Windlock Freqency | Slip | Wind Bar Location | Bolt Spacing Steel Jambs | Bolt Spacing Concrete Jambs 3000 PSI | Bolt Spacing Concrete Jambs 4000 PSI | Guide Load FX Lbs./Ft. | Guide Load FY Lbs./Ft. |
|---|---|---|---|---|---|---|---|---|---|---|---|---|
| 12 - 16 | 8'-6" | Std. | 89 | D.R. - 2.00 | N/A | N/A | N/A | 24" | 18" | 20" | 0 | 170 |
| 18 - 22 | | | 90 | D.R. - 2.25 | | | | 24" | 18" | 20" | | |
| 24 - 30 | | | 91 | D.R. - 2.75 | | | | 24" | 15" | 17" | | |
| 18 - 30 | 16' | Wind Bar | 105 | D.R. - 3.00 | 2nd | 0.937 | 2.063 | 22" | 12" | 13" | 902 | 320 |
| | 18' | | 107 | D.R. - 3.75 | | 1.125 | 2.625 | 21" | 13" | 15" | 1108 | 360 |
| | 20' | | 104 | D.R. - 4.25 | | 1.875 | 3.625 | 17" | N/A | 11" | 1037 | 400 |
| | 22' | | 106 | | | 1.937 | 3.687 | 14" | N/A | N/A | 1260 | 440 |

**45 PSF DESIGN LOAD**

| Headplate Size | Door Opening Width Including | Std./Wind Bar | Guide Ass'y No. | Slat Length | Windlock Freqency | Slip | Wind Bar Location | Bolt Spacing Steel Jambs | Bolt Spacing Concrete Jambs 3000 PSI | Bolt Spacing Concrete Jambs 4000 PSI | Guide Load FX Lbs./Ft. | Guide Load FY Lbs./Ft. |
|---|---|---|---|---|---|---|---|---|---|---|---|---|
| 12 - 16 | 8'-0" | Std. | 89 | D.R. - 2.00 | N/A | N/A | N/A | 24" | 17" | 19" | 0 | 180 |
| 18 - 22 | | | 90 | D.R. - 2.25 | | | | 24" | 17" | 19" | | |
| 24 - 30 | | | 91 | D.R. - 2.75 | | | | 24" | 14" | 16" | | |
| 18 - 30 | 13' | Wind Bar | 105 | D.R. - 3.00 | 2nd | 0.500 | 1.625 | 23" | 12" | 13" | 854 | 293 |
| | 16' | | 107 | D.R. - 3.75 | | 0.937 | 2.437 | 21" | 14" | 15" | 1067 | 360 |
| | 18' | | 104 | D.R. - 4.25 | | 1.375 | 3.125 | 16" | N/A | 11" | 1133 | 405 |
| | 20' | | 106 | | | 1.937 | 3.687 | 14" | N/A | N/A | 1126 | 450 |

**50 PSF DESIGN LOAD**

| Headplate Size | Door Opening Width Including | Std./Wind Bar | Guide Ass'y No. | Slat Length | Windlock Freqency | Slip | Wind Bar Location | Bolt Spacing Steel Jambs | Bolt Spacing Concrete Jambs 3000 PSI | Bolt Spacing Concrete Jambs 4000 PSI | Guide Load FX Lbs./Ft. | Guide Load FY Lbs./Ft. |
|---|---|---|---|---|---|---|---|---|---|---|---|---|
| 12 - 16 | 7'-7" | Std. | 89 | D.R. - 2.00 | N/A | N/A | N/A | 24" | 16" | 18" | 0 | 190 |
| 18 - 22 | | | 90 | D.R. - 2.25 | | | | 24" | 16" | 18" | | |
| 24 - 30 | | | 91 | D.R. - 2.75 | | | | 24" | 14" | 15" | | |
| 18 - 30 | 14' | Wind Bar | 107 | D.R. - 3.75 | 2nd | 0.625 | 2.125 | 21" | 13" | 14" | 1107 | 350 |
| | 16' | | 106 | D.R. - 4.25 | | 1.125 | 2.875 | 15" | N/A | N/A | 1088 | 400 |

STATE OF TEXAS
RICHARD A. BAUMANN
85227
LICENSED
PROFESSIONAL ENGINEER

5-3-2017

| | | | |
|---|---|---|---|
| SCALE: None | RAYNOR<br>1101 EAST RIVER ROAD<br>DIXON, IL 61021 | TITLE: Specifications, Windload Doors For Texas Approvals | |
| DRAWN BY: M. Reutzel | | | |
| CHECKED BY: J. Bonnell | | | |
| DATE: 07/21/2016 | | NO. P-2262 | SHEET 10 / REV A |
| ECN. NO.: 7415.01 | | | |

# DuraCoil - Flat Slat 20 Ga.

Notes:
D.R. = Design Reference
N/A = Not Applicable

## 20 PSF DESIGN LOAD

| Headplate Size | Door Opening Width Including | Std./Wind Bar | Guide Ass'y No. | Slat Length | Windlock Freqency | Slip | Wind Bar Location | Bolt Spacing Steel Jambs | Bolt Spacing Concrete Jambs 3000 PSI | Bolt Spacing Concrete Jambs 4000 PSI | Guide Load FX Lbs./Ft. | Guide Load FY Lbs./Ft. |
|---|---|---|---|---|---|---|---|---|---|---|---|---|
| 12 - 16 | 16'-0" | Std. | 89 | D.R. - 2.00 | N/A | N/A | N/A | 24" | 19" | 21" | 0 | 160 |
| 18 - 22 | | | 90 | D.R. - 2.25 | | | | 24" | 19" | 21" | | |
| 24 - 30 | | | 91 | D.R. - 2.75 | | | | 24" | 16" | 18" | | |
| 16 - 30 | 20' | Wind Bar | 111 | D.R. - 3.00 | 2nd | 1.000 | 2.125 | 24" | 19" | 21" | 574 | 200 |
| 18 - 30 | 23' | | 105 | | | 1.000 | 2.125 | | 14" | 15" | 861 | 230 |
| | 27' | | 110 | D.R. - 3.75 | | 1.125 | 2.625 | 22" | 14" | 16" | 1147 | 270 |
| | 30' | | 107 | | | 1.125 | 2.625 | 18" | 12" | 13" | 1407 | 300 |

## 25 PSF DESIGN LOAD

| Headplate Size | Door Opening Width Including | Std./Wind Bar | Guide Ass'y No. | Slat Length | Windlock Freqency | Slip | Wind Bar Location | Bolt Spacing Steel Jambs | Bolt Spacing Concrete Jambs 3000 PSI | Bolt Spacing Concrete Jambs 4000 PSI | Guide Load FX Lbs./Ft. | Guide Load FY Lbs./Ft. |
|---|---|---|---|---|---|---|---|---|---|---|---|---|
| 12 - 16 | 14'-3" | Std. | 89 | D.R. - 2.00 | N/A | N/A | N/A | 24" | 17" | 19" | 0 | 179 |
| 18 - 22 | | | 90 | D.R. - 2.25 | | | | 24" | 17" | 19" | | |
| 24 - 30 | | | 91 | D.R. - 2.75 | | | | 24" | 15" | 16" | | |
| 16 - 30 | 18' | Wind Bar | 111 | D.R. - 3.00 | 2nd | 1.000 | 2.125 | 24" | 18" | 20" | 559 | 225 |
| 18 - 30 | 20' | | 105 | | | 1.000 | 2.125 | | 14" | 15" | 798 | 250 |
| | 24' | | 110 | D.R. - 3.75 | | 1.125 | 2.625 | 22" | 14" | 15" | 1163 | 300 |
| | 27' | | 107 | | | 1.125 | 2.625 | 17" | 11" | 12" | 1478 | 338 |
| | 30' | | 106 | D.R. - 4.25 | | 1.875 | 3.625 | 15" | N/A | N/A | 1358 | 375 |

## 30 PSF DESIGN LOAD

| Headplate Size | Door Opening Width Including | Std./Wind Bar | Guide Ass'y No. | Slat Length | Windlock Freqency | Slip | Wind Bar Location | Bolt Spacing Steel Jambs | Bolt Spacing Concrete Jambs 3000 PSI | Bolt Spacing Concrete Jambs 4000 PSI | Guide Load FX Lbs./Ft. | Guide Load FY Lbs./Ft. |
|---|---|---|---|---|---|---|---|---|---|---|---|---|
| 12 - 16 | 13'-0" | Std. | 89 | D.R. - 2.00 | N/A | N/A | N/A | 24" | 16" | 17" | 0 | 195 |
| 18 - 22 | | | 90 | D.R. - 2.25 | | | | 24" | 16" | 17" | | |
| 24 - 30 | | | 91 | D.R. - 2.75 | | | | 24" | 13" | 15" | | |
| 16 - 30 | 16' | Wind Bar | 111 | D.R. - 3.00 | 2nd | 1.000 | 2.125 | 24" | 19" | 21" | 460 | 240 |
| 18 - 30 | 19' | | 105 | | | 1.000 | 2.125 | 23" | 12" | 14" | 888 | 285 |
| | 21' | | 110 | D.R. - 3.75 | | 1.125 | 2.625 | 22" | 14" | 16" | 1071 | 315 |
| | 23' | | 107 | | | 1.125 | 2.625 | 19" | 12" | 13" | 1318 | 345 |
| | 25' | | 104 | D.R. - 4.25 | | 2.062 | 3.812 | 16" | N/A | 11" | 1101 | 375 |
| | 30' | | 106 | | | 1.937 | 3.687 | 12" | N/A | N/A | 1629 | 450 |

## 35 PSF DESIGN LOAD

| Headplate Size | Door Opening Width Including | Std./Wind Bar | Guide Ass'y No. | Slat Length | Windlock Freqency | Slip | Wind Bar Location | Bolt Spacing Steel Jambs | Bolt Spacing Concrete Jambs 3000 PSI | Bolt Spacing Concrete Jambs 4000 PSI | Guide Load FX Lbs./Ft. | Guide Load FY Lbs./Ft. |
|---|---|---|---|---|---|---|---|---|---|---|---|---|
| 12 - 16 | 12'-1" | Std. | 89 | D.R. - 2.00 | N/A | N/A | N/A | 24" | 14" | 16" | 0 | 212 |
| 18 - 22 | | | 90 | D.R. - 2.25 | | | | 24" | 14" | 16" | | |
| 24 - 30 | | | 91 | D.R. - 2.75 | | | | 24" | 12" | 13" | | |
| 18 - 30 | 17' | Wind Bar | 105 | D.R. - 3.00 | 2nd | 1.000 | 2.125 | 24" | 13" | 14" | 784 | 298 |
| | 19' | | 110 | D.R. - 3.75 | | 1.125 | 2.625 | 23" | 15" | 16" | 1012 | 333 |
| | 21' | | 107 | | | 1.125 | 2.625 | 19" | 12" | 13" | 1297 | 368 |
| | 23' | | 104 | D.R. - 4.25 | | 2.062 | 3.812 | 16" | N/A | 11" | 1102 | 403 |
| | 27' | | 106 | | | 1.937 | 3.687 | 12" | N/A | N/A | 1588 | 473 |

## 40 PSF DESIGN LOAD

| Headplate Size | Door Opening Width Including | Std./Wind Bar | Guide Ass'y No. | Slat Length | Windlock Freqency | Slip | Wind Bar Location | Bolt Spacing Steel Jambs | Bolt Spacing Concrete Jambs 3000 PSI | Bolt Spacing Concrete Jambs 4000 PSI | Guide Load FX Lbs./Ft. | Guide Load FY Lbs./Ft. |
|---|---|---|---|---|---|---|---|---|---|---|---|---|
| 12 - 16 | 9'-10" | Std. | 89 | D.R. - 2.00 | N/A | N/A | N/A | 24" | 15" | 17" | 0 | 197 |
| 18 - 22 | | | 90 | D.R. - 2.25 | | | | 24" | 15" | 17" | | |
| 24 - 30 | | | 91 | D.R. - 2.75 | | | | 24" | 13" | 14" | | |
| 18 - 30 | 16' | Wind Bar | 105 | D.R. - 3.00 | 2nd | 1.000 | 2.125 | 23" | 13" | 14" | 780 | 320 |
| | 19' | | 107 | D.R. - 3.75 | | 1.125 | 2.625 | 19" | 12" | 13" | 1207 | 380 |
| | 21' | | 104 | D.R. - 4.25 | | 2.062 | 3.812 | 16" | N/A | 11" | 1050 | 420 |
| | 25' | | 106 | | | 1.937 | 3.687 | 12" | N/A | N/A | 1591 | 500 |

## 45 PSF DESIGN LOAD

| Headplate Size | Door Opening Width Including | Std./Wind Bar | Guide Ass'y No. | Slat Length | Windlock Freqency | Slip | Wind Bar Location | Bolt Spacing Steel Jambs | Bolt Spacing Concrete Jambs 3000 PSI | Bolt Spacing Concrete Jambs 4000 PSI | Guide Load FX Lbs./Ft. | Guide Load FY Lbs./Ft. |
|---|---|---|---|---|---|---|---|---|---|---|---|---|
| 12 - 16 | | Std. | 89 | D.R. - 2.00 | N/A | N/A | N/A | | | | | |
| 18 - 22 | | | 90 | D.R. - 2.25 | | | | | | | | |
| 24 - 30 | | | 91 | D.R. - 2.75 | | | | | | | | |
| 18 - 30 | 14' | Wind Bar | 105 | D.R. - 3.00 | 2nd | 0.625 | 1.750 | 22" | 12" | 13" | 837 | 315 |
| | 18' | | 107 | D.R. - 3.75 | | 1.125 | 2.625 | 19" | 12" | 13" | 1225 | 405 |
| | 23' | | 106 | D.R. - 4.25 | | 1.937 | 3.687 | 12" | N/A | N/A | 1541 | 518 |

## 50 PSF DESIGN LOAD

| Headplate Size | Door Opening Width Including | Std./Wind Bar | Guide Ass'y No. | Slat Length | Windlock Freqency | Slip | Wind Bar Location | Bolt Spacing Steel Jambs | Bolt Spacing Concrete Jambs 3000 PSI | Bolt Spacing Concrete Jambs 4000 PSI | Guide Load FX Lbs./Ft. | Guide Load FY Lbs./Ft. |
|---|---|---|---|---|---|---|---|---|---|---|---|---|
| 12 - 16 | | Std. | 89 | D.R. - 2.00 | N/A | N/A | N/A | | | | | |
| 18 - 22 | | | 90 | D.R. - 2.25 | | | | | | | | |
| 24 - 30 | | | 91 | D.R. - 2.75 | | | | | | | | |
| 18 - 30 | 12' | Wind Bar | 105 | D.R. - 3.00 | 2nd | 0.375 | 1.500 | 22" | 12" | 13" | 808 | 300 |
| | 17' | | 107 | D.R. - 3.75 | | 1.125 | 2.625 | 18" | 12" | 13" | 1209 | 425 |
| | 21' | | 106 | D.R. - 4.25 | | 1.937 | 3.687 | 12" | N/A | N/A | 1438 | 525 |

## 55 PSF DESIGN LOAD

| Headplate Size | Door Opening Width Including | Std./Wind Bar | Guide Ass'y No. | Slat Length | Windlock Freqency | Slip | Wind Bar Location | Bolt Spacing Steel Jambs | Bolt Spacing Concrete Jambs 3000 PSI | Bolt Spacing Concrete Jambs 4000 PSI | Guide Load FX Lbs./Ft. | Guide Load FY Lbs./Ft. |
|---|---|---|---|---|---|---|---|---|---|---|---|---|
| 12 - 16 | | Std. | 89 | D.R. - 2.00 | N/A | N/A | N/A | | | | | |
| 18 - 22 | | | 90 | D.R. - 2.25 | | | | | | | | |
| 24 - 30 | | | 91 | D.R. - 2.75 | | | | | | | | |
| 18 - 30 | 15' | Wind Bar | 107 | D.R. - 3.75 | 2nd | 0.812 | 2.312 | 19" | 12" | 13" | 1204 | 413 |
| | 20' | | 106 | D.R. - 4.25 | | 1.937 | 3.687 | 12" | N/A | N/A | 1447 | 550 |

## 60 PSF DESIGN LOAD

| Headplate Size | Door Opening Width Including | Std./Wind Bar | Guide Ass'y No. | Slat Length | Windlock Freqency | Slip | Wind Bar Location | Bolt Spacing Steel Jambs | Bolt Spacing Concrete Jambs 3000 PSI | Bolt Spacing Concrete Jambs 4000 PSI | Guide Load FX Lbs./Ft. | Guide Load FY Lbs./Ft. |
|---|---|---|---|---|---|---|---|---|---|---|---|---|
| 12 - 16 | | Std. | 89 | D.R. - 2.00 | N/A | N/A | N/A | | | | | |
| 18 - 22 | | | 90 | D.R. - 2.25 | | | | | | | | |
| 24 - 30 | | | 91 | D.R. - 2.75 | | | | | | | | |
| 18 - 30 | 14' | Wind Bar | 107 | D.R. - 3.75 | 2nd | 0.687 | 2.187 | 18" | 11" | 12" | 1243 | 420 |
| | 18' | | 106 | D.R. - 4.25 | | 1.437 | 3.187 | 12" | N/A | N/A | 1516 | 540 |

STATE OF TEXAS
RICHARD A. BAUMANN
85227
LICENSED
PROFESSIONAL ENGINEER

5-3-2017

| | |
|---|---|
| SCALE: None | |
| DRAWN BY: M. Reutzel | |
| CHECKED BY: J. Bonnell | |
| DATE: 07/21/2016 | |
| ECN. NO.: 7415.01 | |

RAYNOR
1101 EAST RIVER ROAD
DIXON, IL. 61021

TITLE: Specifications, Windload Doors For Texas Approvals

NO. P-2262 | SHEET 11 | REV A

# DuraCoil - Flat Slat 18 Ga.

Notes:
D.R. = Design Reference
N/A = Not Applicable

### 20 PSF DESIGN LOAD

| Headplate Size | Door Opening Width Including | Std./Wind Bar | Guide Ass'y No. | Slat Length | Windlock Freqency | Slip | Wind Bar Location | Bolt Spacing Steel Jambs | Bolt Spacing Concrete Jambs 3000 PSI | Bolt Spacing Concrete Jambs 4000 PSI | Guide Load FX Lbs./Ft. | Guide Load FY Lbs./Ft. |
|---|---|---|---|---|---|---|---|---|---|---|---|---|
| 12 - 16 | 17'-3" | Std. | 89 | D.R. - 2.00 | N/A | N/A | N/A | 24" | 18" | 19" | 0 | 173 |
| 18 - 22 | | | 90 | D.R. - 2.25 | | | | 24" | 18" | 19" | | |
| 24 - 30 | | | 91 | D.R. - 2.75 | | | | 24" | 15" | 17" | | |
| 16 - 30 | 20' | Wind Bar | 111 | D.R. - 3.00 | 2nd | 1.000 | 2.125 | 24" | 20" | 22" | 484 | 200 |
| 18 - 30 | 22' | | 105 | | | 1.000 | 2.125 | | 16" | 17" | 693 | 220 |
| | 28' | | 110 | D.R. - 3.75 | | 1.125 | 2.625 | 21" | 14" | 15" | 1188 | 260 |
| | 32' | | 107 | | | 1.125 | 2.625 | 16" | 11" | 12" | 1547 | 320 |
| | 40' | | 106 | D.R. - 4.25 | | 1.875 | 3.625 | 12" | N/A | N/A | 1745 | 400 |

### 25 PSF DESIGN LOAD

| Headplate Size | Door Opening Width Including | Std./Wind Bar | Guide Ass'y No. | Slat Length | Windlock Freqency | Slip | Wind Bar Location | Bolt Spacing Steel Jambs | Bolt Spacing Concrete Jambs 3000 PSI | Bolt Spacing Concrete Jambs 4000 PSI | Guide Load FX Lbs./Ft. | Guide Load FY Lbs./Ft. |
|---|---|---|---|---|---|---|---|---|---|---|---|---|
| 12 - 16 | 15'-5" | Std. | 89 | D.R. - 2.00 | N/A | N/A | N/A | 24" | 16" | 17" | 0 | 193 |
| 18 - 22 | | | 90 | D.R. - 2.25 | | | | 24" | 16" | 17" | | |
| 24 - 30 | | | 91 | D.R. - 2.75 | | | | 24" | 13" | 15" | | |
| 16 - 30 | 18' | Wind Bar | 111 | D.R. - 3.00 | 2nd | 1.000 | 2.125 | 24" | 20" | 22" | 448 | 225 |
| 18 - 30 | 22' | | 105 | | | 1.000 | 2.125 | 22" | 12" | 13" | 951 | 275 |
| | 24' | | 110 | D.R. - 3.75 | | 1.125 | 2.625 | 22" | 14" | 16" | 1101 | 300 |
| | 28' | | 107 | | | 1.125 | 2.625 | 16" | 11" | 12" | 1537 | 350 |
| | 35' | | 106 | D.R. - 4.25 | | 1.875 | 3.625 | 12" | N/A | N/A | 1756 | 438 |

### 30 PSF DESIGN LOAD

| Headplate Size | Door Opening Width Including | Std./Wind Bar | Guide Ass'y No. | Slat Length | Windlock Freqency | Slip | Wind Bar Location | Bolt Spacing Steel Jambs | Bolt Spacing Concrete Jambs 3000 PSI | Bolt Spacing Concrete Jambs 4000 PSI | Guide Load FX Lbs./Ft. | Guide Load FY Lbs./Ft. |
|---|---|---|---|---|---|---|---|---|---|---|---|---|
| 12 - 16 | 14'-1" | Std. | 89 | D.R. - 2.00 | N/A | N/A | N/A | 24" | 14" | 16" | 0 | 212 |
| 18 - 22 | | | 90 | D.R. - 2.25 | | | | 24" | 14" | 16" | | |
| 24 - 30 | | | 91 | D.R. - 2.75 | | | | 24" | 12" | 13" | | |
| 16 - 30 | 16' | Wind Bar | 111 | D.R. - 3.00 | 2nd | 1.000 | 2.125 | 24" | 22" | 24" | 319 | 240 |
| 18 - 30 | 20' | | 105 | | | 1.000 | 2.125 | 21" | 12" | 13" | 932 | 300 |
| | 23' | | 107 | D.R. - 3.75 | | 1.125 | 2.625 | 20" | 12" | 13" | 1250 | 345 |
| | 26' | | 104 | D.R. - 4.25 | | 2.062 | 3.812 | 16" | N/A | N/A | 1142 | 390 |
| | 31' | | 106 | | | 1.937 | 3.687 | 12" | N/A | N/A | 1590 | 465 |

### 35 PSF DESIGN LOAD

| Headplate Size | Door Opening Width Including | Std./Wind Bar | Guide Ass'y No. | Slat Length | Windlock Freqency | Slip | Wind Bar Location | Bolt Spacing Steel Jambs | Bolt Spacing Concrete Jambs 3000 PSI | Bolt Spacing Concrete Jambs 4000 PSI | Guide Load FX Lbs./Ft. | Guide Load FY Lbs./Ft. |
|---|---|---|---|---|---|---|---|---|---|---|---|---|
| 12 - 16 | 12'-8" | Std. | 89 | D.R. - 2.00 | N/A | N/A | N/A | 24" | 14" | 15" | 0 | 222 |
| 18 - 22 | | | 90 | D.R. - 2.25 | | | | 24" | 14" | 15" | | |
| 24 - 30 | | | 91 | D.R. - 2.75 | | | | 24" | 12" | 13" | | |
| 16 - 30 | 15' | Wind Bar | 111 | D.R. - 3.00 | 2nd | 0.875 | 2.000 | 24" | 20" | 22" | 358 | 263 |
| 18 - 30 | 18' | | 105 | | | 1.000 | 2.125 | 22" | 12" | 13" | 830 | 315 |
| | 21' | | 107 | D.R. - 3.75 | | 1.125 | 2.625 | 19" | 12" | 13" | 1216 | 368 |
| | 23' | | 104 | D.R. - 4.25 | | 2.062 | 3.812 | 16" | N/A | 11" | 1034 | 403 |
| | 28' | | 106 | | | 1.937 | 3.687 | 12" | N/A | N/A | 1654 | 490 |

### 40 PSF DESIGN LOAD

| Headplate Size | Door Opening Width Including | Std./Wind Bar | Guide Ass'y No. | Slat Length | Windlock Freqency | Slip | Wind Bar Location | Bolt Spacing Steel Jambs | Bolt Spacing Concrete Jambs 3000 PSI | Bolt Spacing Concrete Jambs 4000 PSI | Guide Load FX Lbs./Ft. | Guide Load FY Lbs./Ft. |
|---|---|---|---|---|---|---|---|---|---|---|---|---|
| 12 - 16 | 11'-1" | Std. | 89 | D.R. - 2.00 | N/A | N/A | N/A | 24" | 14" | 15" | 0 | 222 |
| 18 - 22 | | | 90 | D.R. - 2.25 | | | | 24" | 14" | 15" | | |
| 24 - 30 | | | 91 | D.R. - 2.75 | | | | 24" | 12" | 13" | | |
| 16 - 30 | 13' | Wind Bar | 111 | D.R. - 3.00 | 2nd | 0.562 | 1.687 | 24" | 20" | 22" | 280 | 260 |
| 18 - 30 | 17' | | 105 | | | 1.000 | 2.125 | 21" | 12" | 13" | 834 | 340 |
| | 19' | | 107 | D.R. - 3.75 | | 1.125 | 2.625 | 20" | 13" | 14" | 1107 | 380 |
| | 21' | | 104 | D.R. - 4.25 | | 2.062 | 3.812 | 17" | N/A | 11" | 969 | 420 |
| | 25' | | 106 | | | 1.937 | 3.687 | 12" | N/A | N/A | 1534 | 500 |

### 45 PSF DESIGN LOAD

| Headplate Size | Door Opening Width Including | Std./Wind Bar | Guide Ass'y No. | Slat Length | Windlock Freqency | Slip | Wind Bar Location | Bolt Spacing Steel Jambs | Bolt Spacing Concrete Jambs 3000 PSI | Bolt Spacing Concrete Jambs 4000 PSI | Guide Load FX Lbs./Ft. | Guide Load FY Lbs./Ft. |
|---|---|---|---|---|---|---|---|---|---|---|---|---|
| 12 - 16 | 9'-10" | Std. | 89 | D.R. - 2.00 | N/A | N/A | N/A | 24" | 14" | 15" | 0 | 222 |
| 18 - 22 | | | 90 | D.R. - 2.25 | | | | 24" | 14" | 15" | | |
| 24 - 30 | | | 91 | D.R. - 2.75 | | | | 24" | 12" | 13" | | |
| 16 - 30 | 12' | Wind Bar | 111 | D.R. - 3.00 | 2nd | 0.437 | 1.562 | 24" | 19" | 21" | 276 | 270 |
| 18 - 30 | 16' | | 105 | | | 1.000 | 2.125 | 21" | 12" | 13" | 789 | 360 |
| | 18' | | 107 | D.R. - 3.75 | | 1.125 | 2.625 | 19" | 12" | 14" | 1114 | 405 |
| | 20' | | 104 | D.R. - 4.25 | | 2.062 | 3.812 | 16" | N/A | 11" | 992 | 450 |
| | 23' | | 106 | | | 1.937 | 3.687 | 12" | N/A | N/A | 1473 | 518 |

### 50 PSF DESIGN LOAD

| Headplate Size | Door Opening Width Including | Std./Wind Bar | Guide Ass'y No. | Slat Length | Windlock Freqency | Slip | Wind Bar Location | Bolt Spacing Steel Jambs | Bolt Spacing Concrete Jambs 3000 PSI | Bolt Spacing Concrete Jambs 4000 PSI | Guide Load FX Lbs./Ft. | Guide Load FY Lbs./Ft. |
|---|---|---|---|---|---|---|---|---|---|---|---|---|
| 12 - 16 | 8'-10" | Std. | 89 | D.R. - 2.00 | N/A | N/A | N/A | 24" | 14" | 15" | 0 | 221 |
| 18 - 22 | | | 90 | D.R. - 2.25 | | | | 24" | 14" | 15" | | |
| 24 - 30 | | | 91 | D.R. - 2.75 | | | | 24" | 12" | 13" | | |
| 18 - 30 | 14' | Wind Bar | 105 | D.R. - 3.00 | 2nd | 0.687 | 1.812 | 22" | 12" | 13" | 743 | 350 |
| | 17' | | 107 | D.R. - 3.75 | | 1.125 | 2.625 | 19" | 12" | 13" | 1085 | 425 |
| | 22' | | 106 | D.R. - 4.25 | | 1.937 | 3.687 | 12" | N/A | N/A | 1515 | 550 |

### 55 PSF DESIGN LOAD

| Headplate Size | Door Opening Width Including | Std./Wind Bar | Guide Ass'y No. | Slat Length | Windlock Freqency | Slip | Wind Bar Location | Bolt Spacing Steel Jambs | Bolt Spacing Concrete Jambs 3000 PSI | Bolt Spacing Concrete Jambs 4000 PSI | Guide Load FX Lbs./Ft. | Guide Load FY Lbs./Ft. |
|---|---|---|---|---|---|---|---|---|---|---|---|---|
| 12 - 16 | 8'-0" | Std. | 89 | D.R. - 2.00 | N/A | N/A | N/A | 24" | 14" | 15" | 0 | 220 |
| 18 - 22 | | | 90 | D.R. - 2.25 | | | | 24" | 14" | 15" | | |
| 24 - 30 | | | 91 | D.R. - 2.75 | | | | 24" | 12" | 13" | | |
| 18 - 30 | 13' | Wind Bar | 105 | D.R. - 3.00 | 2nd | 0.562 | 1.687 | 21" | 12" | 13" | 749 | 358 |
| | 16' | | 107 | D.R. - 3.75 | | 1.000 | 2.500 | 19" | 12" | 13" | 1119 | 440 |
| | 20' | | 106 | D.R. - 4.25 | | 1.937 | 3.687 | 12" | N/A | N/A | 1357 | 550 |

### 60 PSF DESIGN LOAD

| Headplate Size | Door Opening Width Including | Std./Wind Bar | Guide Ass'y No. | Slat Length | Windlock Freqency | Slip | Wind Bar Location | Bolt Spacing Steel Jambs | Bolt Spacing Concrete Jambs 3000 PSI | Bolt Spacing Concrete Jambs 4000 PSI | Guide Load FX Lbs./Ft. | Guide Load FY Lbs./Ft. |
|---|---|---|---|---|---|---|---|---|---|---|---|---|
| 12 - 16 | 7'-4" | Std. | 89 | D.R. - 2.00 | N/A | N/A | N/A | 24" | 14" | 15" | 0 | 220 |
| 18 - 22 | | | 90 | D.R. - 2.25 | | | | 24" | 14" | 15" | | |
| 24 - 30 | | | 91 | D.R. - 2.75 | | | | 24" | 12" | 13" | | |
| 18 - 30 | 15' | Wind Bar | 107 | D.R. - 3.75 | 2nd | 0.875 | 2.375 | 18" | 12" | 13" | 1134 | 450 |
| | 16' | | 106 | D.R. - 4.25 | | 1.875 | 3.625 | 12" | N/A | N/A | 762 | 480 |

5-3-2017

| | | | |
|---|---|---|---|
| SCALE: None | RAYNOR 1101 EAST RIVER ROAD DIXON, IL 61021 | TITLE: Specifications, Windload Doors For Texas Approvals | |
| DRAWN BY: M. Reutzel | | | |
| CHECKED BY: J. Bonnell | | | |
| DATE: 07/21/2016 | | NO. P-2262 | SHEET 12 / REV A |
| ECN. NO. 7415.01 | | | |