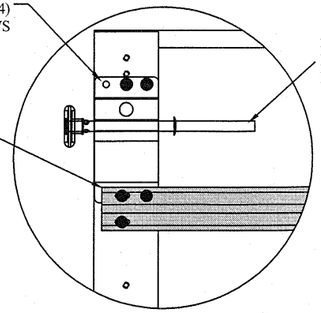

TYPICAL TOP FIXTURES (1)
N.T.S.

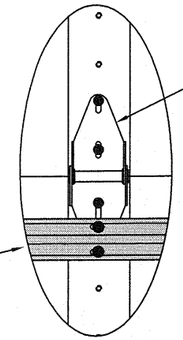

TYPICAL CENTER HINGE (2)
N.T.S.

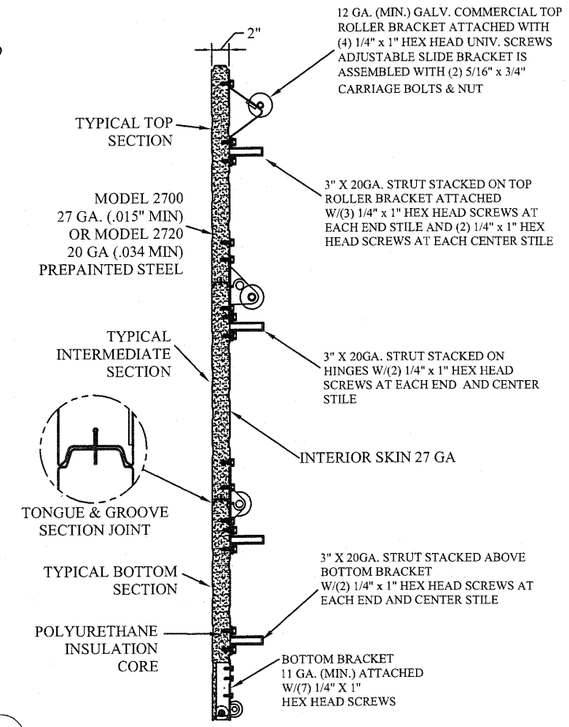

SECTION A–A (SIDE VIEW)
N.T.S.

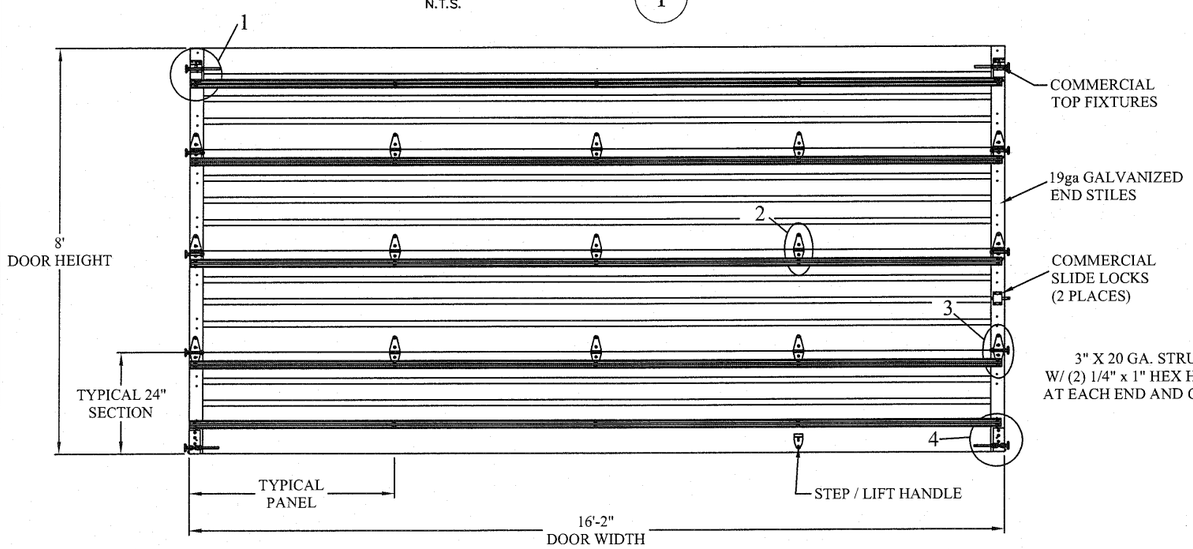

DOOR INTERIOR ELEVATION

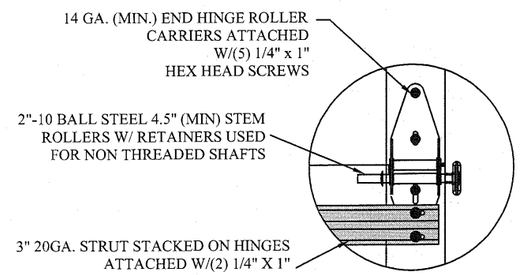

TYPICAL END HINGE (3)
N.T.S.

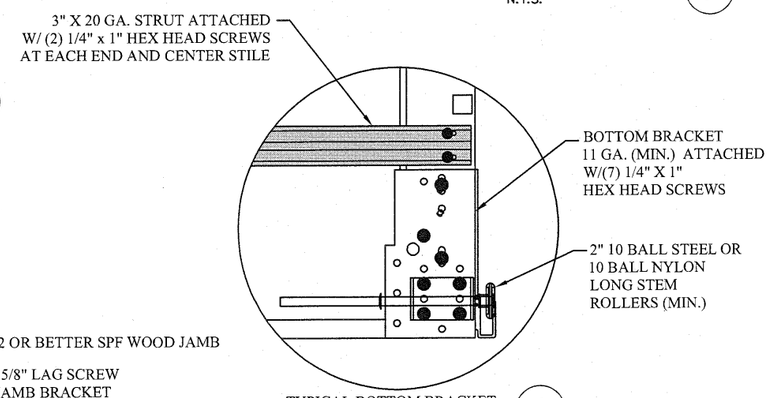

TYPICAL BOTTOM BRACKET (4)
N.T.S.

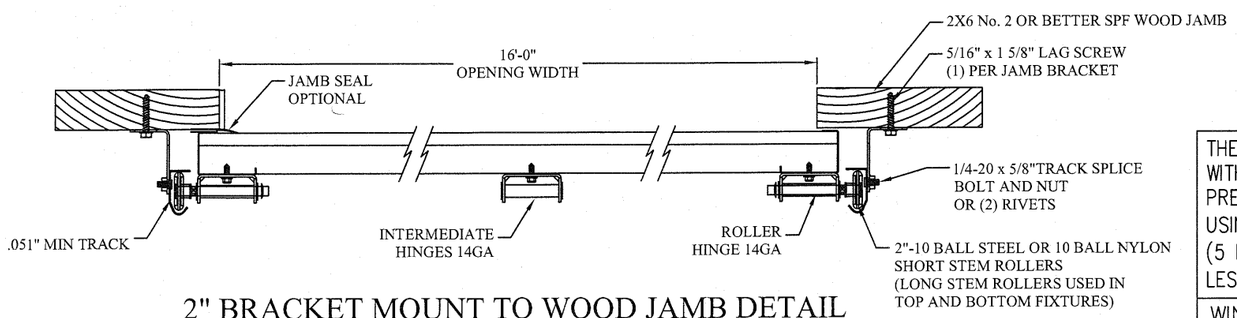

2" BRACKET MOUNT TO WOOD JAMB DETAIL

THE METHOD OF TESTING WAS IN SUBSTANTIAL CONFORMANCE WITH THE PROCEDURES DESCRIBED IN DASMA 108. THE PRESSURES SHOWN ON THE DRAWINGS WERE CALCULATED USING ASCE 7–98/02/05 WITH THE FOLLOWING PARAMETERS (5 FEET OF DOOR WIDTH IN END ZONE, ROOF SLOPE 10° OR LESS, AND I=1.0):

WIND SPEED (MPH)	104	95	90	86	83
EXPOSURE LEVEL	B	C	C	D	D
MEAN ROOF HEIGHT	30'	15'	25'	15'	25'

REV	DESCRIPTION OF REVISIONS	DATE	BY

MAX SIZE
16'2 x 24'

DESIGN LOADS
+15.0 PSF
−17.0 PSF

TEST LOADS
+22.5 PSF
−25.5 PSF

Thomas L. Shelmerdine, PE (TX PE #85829)
Structural Solutions, PA (TX Firm #F-004063)

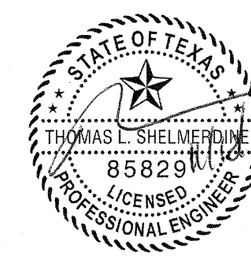

TX

5921-G W. Friendly Ave., Greensboro, NC 27410

ENTREMATIC

165 CARRIAGE COURT WINSTON-SALEM, N.C. 27105

MODEL 2700
MODEL 2720

SIZE	DRAWN BY RS	DATE 09/30/14	DRAWING NUMBER
B	CHECKED BY RLR	DATE 09/30/14	IBC-2716-104-15
			SHEET 1 OF 4

TRACK CONNECTION DIRECTLY TO STRUCTURE OPTIONS

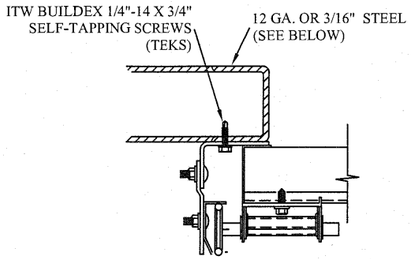

CLIP STYLE REVERSE ANGLE MOUNT SHOWN
BRACKET, CONTINUOUS AND TAPERED ANGLE MOUNT AVAILABLE

12 GA. STEEL FRAMING
232 LBS./SCREW ALLOWABLE LOAD - 6" FROM ENDS AND 22" O.C.
REFER TO NOTES: 1, 2 AND 5

3/16" STEEL FRAMING
569 LBS./SCREW ALLOWABLE LOAD - 6" FROM ENDS AND 24" O.C.
REFER TO NOTES: 1, 2 AND 5

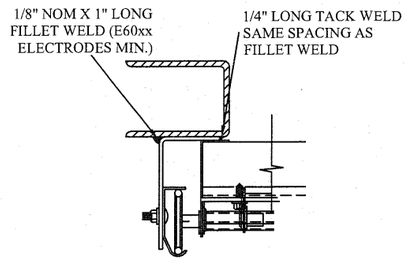

REVERSE ANGLE MOUNT SHOWN
BRACKET, CONTINUOUS AND TAPERED ANGLE MOUNT AVAILABLE

STEEL FRAMING 12GA OR BETTER
1590 LBS./IN. ALLOWABLE LOAD - 6" FROM ENDS AND 24" O.C.
REFER TO NOTES: 1, 2, 5, 6, 7, 8 AND 9

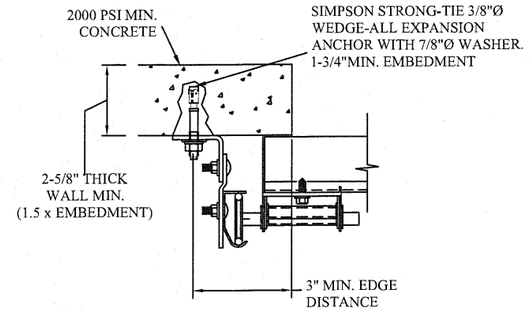

CLIP STYLE CONTINUOUS ANGLE MOUNT SHOWN
BRACKET, REVERSE AND TAPERED ANGLE MOUNT AVAILABLE

2000 PSI CONCRETE OR GREATER
351 LBS./EXPANSION ANCHOR ALLOWABLE LOAD - 6" FROM ENDS AND 24" O.C.
REFER TO NOTES: 1, 2, 3, 4 AND 5

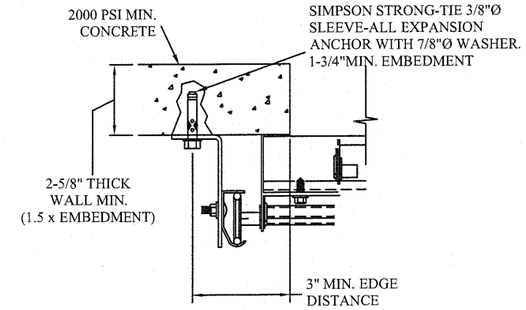

CONTINUOUS ANGLE MOUNT SHOWN
BRACKET, CONTINUOUS AND TAPERED ANGLE MOUNT AVAILABLE

2000 PSI CONCRETE OR GREATER
336 LBS./EXPANSION ANCHOR ALLOWABLE LOAD - 6" FROM ENDS AND 24" O.C.
REFER TO NOTES: 1, 2, 3, 4 AND 5

SPECIFICATIONS AND NOTES

1. ALL THE LOAD FROM THE DOOR IS TRANSFERRED TO THE VERTICAL TRACK, FROM THE TRACK THE LOAD IS TRANSFERRED TO THE VERTICAL JAMBS. THE HORIZONTAL JAMB OR HEADER RECEIVES NO PORTION OF THE LOAD TRANSFERRED FROM THE DOOR.
2. EACH VERTICAL JAMBS RECEIVES MAXIMUM DESIGN LOADS OF: +121.3 LBS/FT & −137.4 LBS/FT
3. DOOR AND HARDWARE WILL BE DESIGNED, MANUFACTURED AND INSTALLED WITH STANDARDS AS SET FORTH BY DASMA.
4. DOOR SECTIONS SHALL BE 27 GA. (.015) MIN. EXTERIOR SKIN ROLLED FORMED, W/ BAKED ON POLYESTER FINISH
5. DOORS UP TO 24'0" HIGH USE (1) 3" 20GA STRUTS PER SECTION & (2) 3" 20GA STRUT ON THE BOTTOM SECTION.
6. SUPPORTING STRUCTURAL ELEMENTS SHALL BE DESIGNED BY A REGISTRED PROFESSIONAL ENGINEER FOR WIND LOADS INDICATED ON THIS DRAWING IN ADDITION TO OTHER LOADINGS.

WOOD JAMB ATTACHMENT TO STRUCTURE (OPTIONAL)

2 X 6 VERTICAL JAMB ATTACHMENT TO WOOD FRAME STRUCTURE
5/16" X 3" LAG SCREWS STARTING 6" FROM ENDS
THEN 24" O.C. (1 1/2" EMBEDMENT)

2 X 6 VERTICAL JAMB ATTACHMENT TO 2,000 PSI CONCRETE
HILTI KWIK BOLT 3/8" X 4" STARTING 6" FROM ENDS
THEN 24" O.C. (2 1/2" EMBEDMENT)
HILTI SLEEVE ANCHOR 3/8" X 2-3/4" STARTING 6" FROM ENDS
THEN 24" O.C. (1 1/4" EMBEDMENT)
ITW/RAMSET REDHEAD (TRU-BOLT) 3/8" X 4" STARTING 6" FROM ENDS
THEN 24" O.C. (2 1/2" EMBEDMENT)

2 X 6 VERTICAL JAMB ATTACHMENT TO HOLLOW C-90 BLOCK
SIMPSON 1/4" X 3" TITEN SCREWS STARTING 6" FROM ENDS,
USE PAIRS OF FASTENERS (3" APART)
AT 24" O.C. (1 1/2" EMBEDMENT)
HILTI 1/4" X 2-3/4" KWIK-CON II+ SCREWS STARTING 6" FROM ENDS,
USE PAIRS OF FASTENERS (3" APART) AT 24" O.C. (1 1/4" EMBEDMENT)

2 X 6 VERTICAL JAMB ATTACHMENT TO GROUTED C-90 BLOCK (2000 PSI GROUT)
HILTI SLEEVE ANCHOR 3/8" X 2-3/4" STARTING 6" FROM ENDS
THEN 24" O.C. (1 1/4" EMBEDMENT)
(OR, USE FASTENERS FOR HOLLOW C-90 BLOCK)

*LAGS AND BOLTS CAN BE COUNTERSUNK TO PROVIDE A FLUSH MOUNTING SURFACE.
*PREPARATION OF WOOD JAMBS BY OTHERS

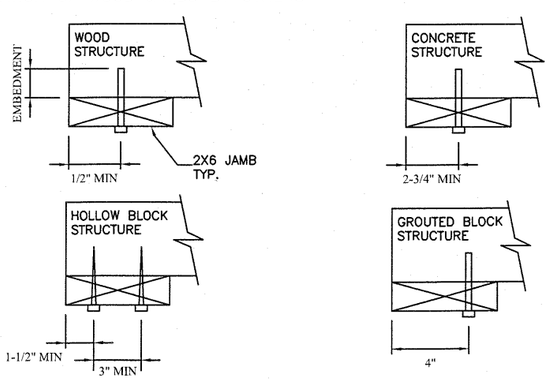

NOTES:

1. ANCHORS TO BE EVENLY SPACED BETWEEN THE HEADER AND FLOOR.
2. FIRST (BOTTOM) ANCHOR STARTING AT NO MORE THAN HALF OF THE MAXIMUM ON-CENTER DISTANCE. HIGHEST ANCHOR INSTALLED AT LEAST AS HIGH AS THE DOOR OPENING.
3. MIN. EGDE DISTANCE OF 3" REQUIRED.
4. USE WASHERS PROVIDED BY THE ANCHOR MANUFACTURER.
5. SUPPORTING STRUCTURAL ELEMENTS SHALL BE DESIGNED BY A REGISTERED PROFESSIONAL ENGINEER FOR WIND LOADS IN ADDITION TO OTHER LOADS.
6. MOST GARAGE DOOR TRACK IS GALVANIZED STEEL. USE ALL NECESSARY PRECAUTIONS WHEN WELDING GALVANIZED STEEL.
7. ALL WELDS SHOULD BE PERFORMED BY A CERTIFIED WELDER OR INSPECTED BY A CERTIFIED WELDING INSPECTOR TO VERIFY THE INTEGRITY OF THE WELD.
8. FILLET WELDS TO HAVE A STRAIGHT OR CONVEX FACE SURFACE.
9. TACK WELD TOE OF ANGLE AT SAME SPACING TO PREVENT ROTATION OF TRACK ANGLE.

INTERIOR OF GARAGE

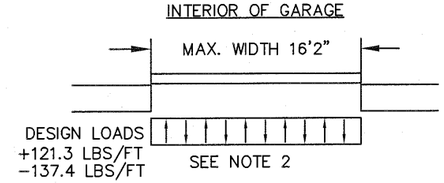

TRACK CONNECTION TO WOOD JAMB OPTIONS

FOR LAG SCREWS & BRACKET SPACING SEE PAGE 3 FOR TRACK CONFIGURATION DETAIL

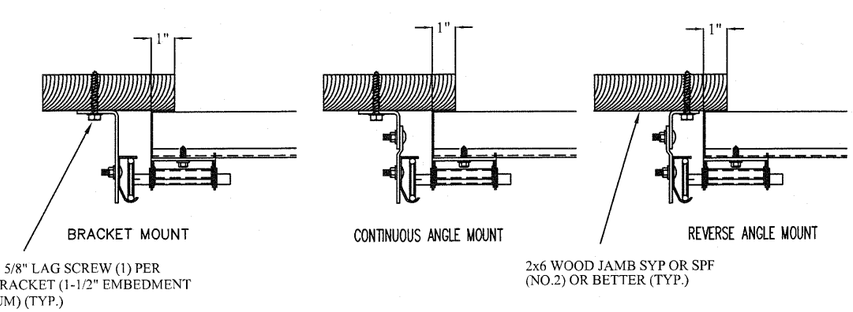

REV	DESCRIPTION OF REVISIONS	DATE	BY

MAX SIZE
16'2 x 24'

DESIGN LOADS
+15.0 PSF
−17.0 PSF

TEST LOADS
+22.5 PSF
−25.5 PSF

Thomas L. Shelmerdine, PE (TX PE #85829)
Structural Solutions, PA (TX Firm #F-004063)

STATE OF TEXAS
THOMAS L. SHELMERDINE
85829
LICENSED
PROFESSIONAL ENGINEER
10/3/14

TX

5921-G W. Friendly Ave., Greensboro, NC 27410

ENTREMATIC

165 CARRIAGE COURT WINSTON-SALEM, N.C. 27105

MODEL 2700
MODEL 2720

SIZE	DRAWN BY	RS	DATE	09/30/14	DRAWING NUMBER
B	CHECKED BY	RLR	DATE	09/30/14	IBC-2716-104-15
					SHEET 2 OF 4

TOP SECTION

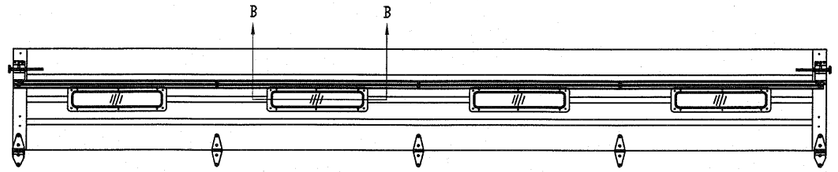

OPTIONAL GLAZED SECTION W/ 24" X 6" WINDOWS
N.T.S.

INTERMEDIATE SECTION

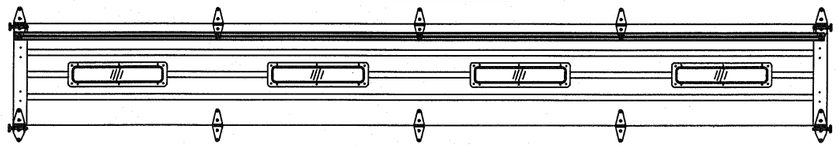

OPTIONAL GLAZED SECTION W/ 24" X 6" WINDOWS
N.T.S.

TOP SECTION

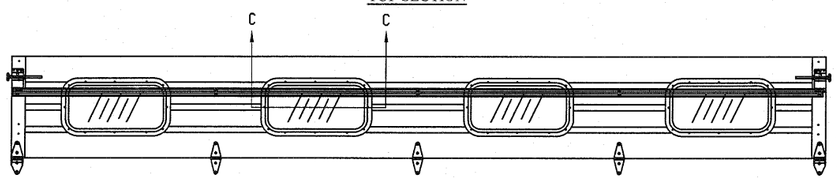

OPTIONAL GLAZED SECTION W/ 26" X 13" WINDOWS
N.T.S.

INTERMEDIATE SECTION

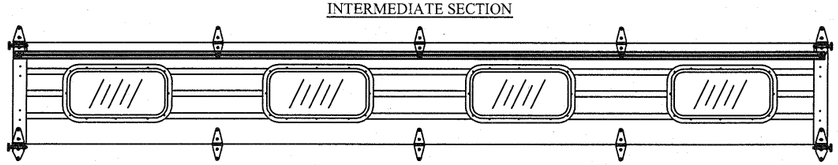

OPTIONAL GLAZED SECTION W/ 26" X 13" WINDOWS
N.T.S.

TOP SECTION

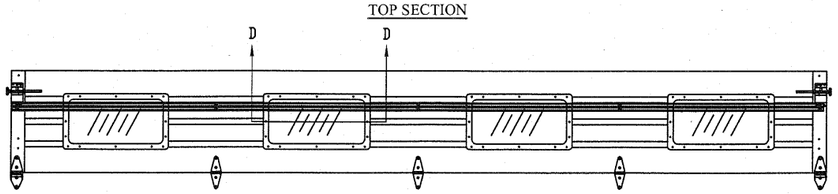

OPTIONAL GLAZED SECTION W/ 24" X 12" WINDOWS
N.T.S.

INTERMEDIATE SECTION

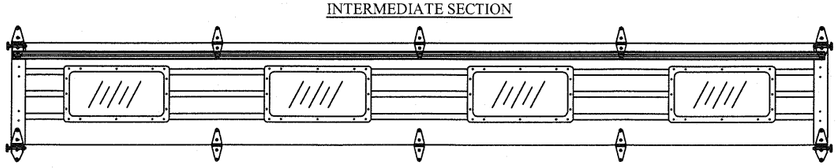

OPTIONAL GLAZED SECTION W/ 24" X 12" WINDOWS
N.T.S.

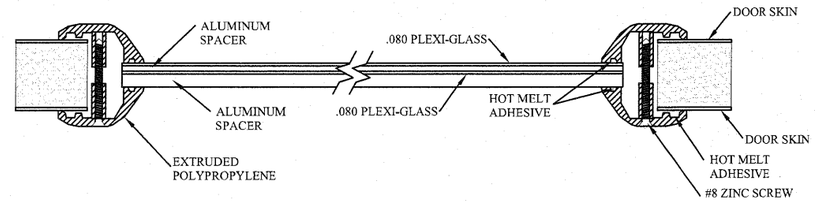

SECTION B-B 24" X 6" WINDOW DETAIL W/ .080 PLEXI-GLASS
N.T.S.

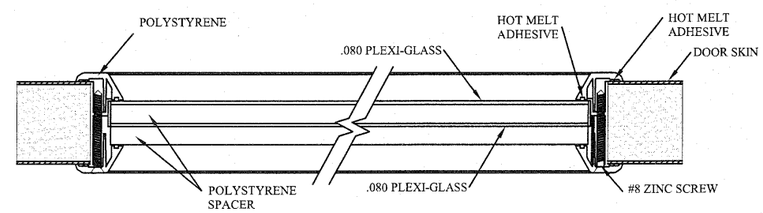

SECTION C-C 26" X 13" WINDOW DETAIL W/ INSULATED PLEXI-GLASS
N.T.S.

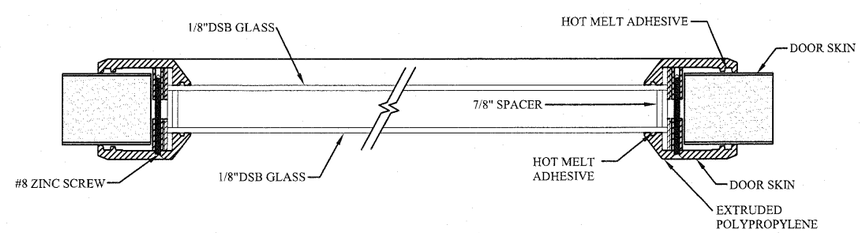

SECTION D-D 24" X 12" WINDOW DETAIL W/ 1-1/8" INSULATED GLASS
N.T.S.

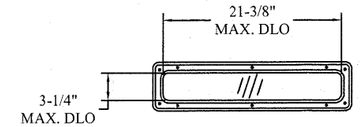

24" X 6" DAY LIGHT OPENING AND FASTENER DETAIL
N.T.S.

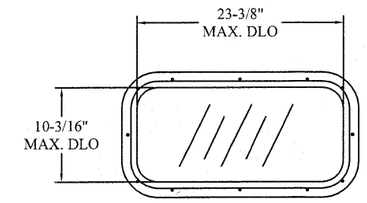

26" X 13" DAY LIGHT OPENING AND FASTENER DETAIL
N.T.S.

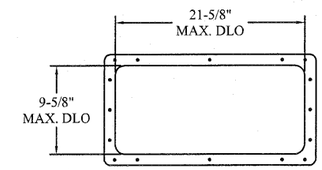

24" X 12" DAY LIGHT OPENING AND FASTENER DETAIL
N.T.S.

REV	DESCRIPTION OF REVISIONS	DATE	BY

MAX SIZE
16'2 x 24'

DESIGN LOADS
+15.0 PSF
−17.0 PSF

TEST LOADS
+22.5 PSF
−25.5 PSF

Thomas L. Shelmerdine, PE (TX PE #85829)
Structural Solutions, PA (TX Firm #F-004063)

STATE OF TEXAS
THOMAS L. SHELMERDINE
85829
LICENSED
PROFESSIONAL ENGINEER
10-3-14

TX

5921-G W. Friendly Ave., Greensboro, NC 27410

ENTREMATIC

165 CARRIAGE COURT WINSTON-SALEM, N.C. 27105

MODEL 2700
MODEL 2720

SIZE	DRAWN BY RS	DATE 09/30/14	DRAWING NUMBER
B	CHECKED BY RLR	DATE 09/30/14	IBC-2716-104-15
			SHEET 3 OF 4

TABLE 1

Section Width (ft)		Center Stile Locations (Measured from Left			Max Design Loads Allowed	
		1st (in)	2nd (in)	3rd (in)	Positive (PSF)	Negitive (PSF)
9'	4"	36"	76"	-	19.0	21.5
9'	6"	37"	77"	-	18.8	21.3
9'	8"	38"	78"	-	18.5	21.0
9'	10"	39"	79"	-	18.3	20.7
10'	0"	40"	80"	-	18.0	20.5
10'	2"	41"	81"	-	17.8	20.2
10'	4"	42"	82"	-	17.6	20.0
10'	6"	43"	83"	-	17.4	19.7
10'	8"	44"	84"	-	17.2	19.5
10'	10"	45"	85"	-	17.0	19.3
11'	0"	46"	86"	-	16.8	19.0
11'	2"	47"	87"	-	16.6	18.8
11'	4"	48"	88"	-	16.4	18.6
11'	6"	49"	89"	-	16.2	18.4
11'	8"	50"	90"	-	16.0	18.2
11'	10"	51"	91"	-	15.9	18.0
12'	0"	48"	96"	-	15.0	17.0
12'	2"	49"	97"	-	14.9	16.9
12'	4"	50"	98"	-	14.7	16.7
12'	6"	51"	99"	-	14.6	16.5
12'	8"	52"	100"	-	14.4	16.4
12'	10"	53"	101"	-	14.3	16.2
13'	0"	36"	78"	120"	17.2	19.5
13'	2"	37"	79"	121"	17.2	19.5
13'	4"	38"	80"	122"	17.2	19.5
13'	6"	39"	81"	123"	17.2	19.5
13'	8"	40"	82"	124"	17.2	19.5
13'	10"	41"	83"	125"	17.2	19.5
14'	0"	42"	84"	126"	17.2	19.5
14'	2"	43"	85"	127"	17.0	19.3
14'	4"	44"	86"	128"	16.8	19.0
14'	6"	45"	87"	129"	16.6	18.8
14'	8"	46"	88"	130"	16.4	18.6
14'	10"	47"	89"	131"	16.2	18.4
15'	0"	48"	90"	132"	16.0	18.2
15'	2"	49"	91"	133"	15.9	18.0
15'	4"	50"	92"	134"	15.7	17.8
15'	6"	51"	93"	135"	15.5	17.6
15'	8"	52"	94"	136"	15.4	17.4
15'	10"	53"	95"	137"	15.2	17.2
16'	0"	48"	96"	144"	15.0	17.0
16'	2"	49"	97"	145"	15.0	17.0

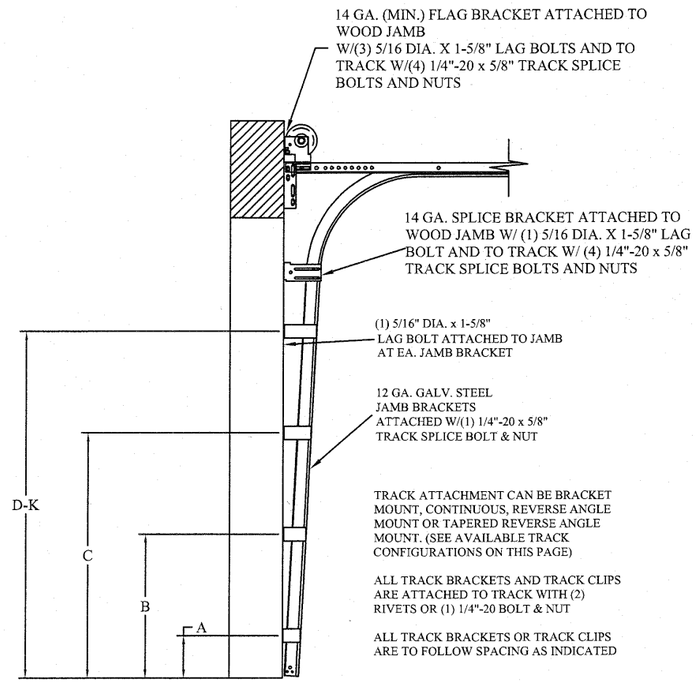

TRACK CONFIGURATION FOR UP TO 24' TALL DOORS
SEE TABLE 2

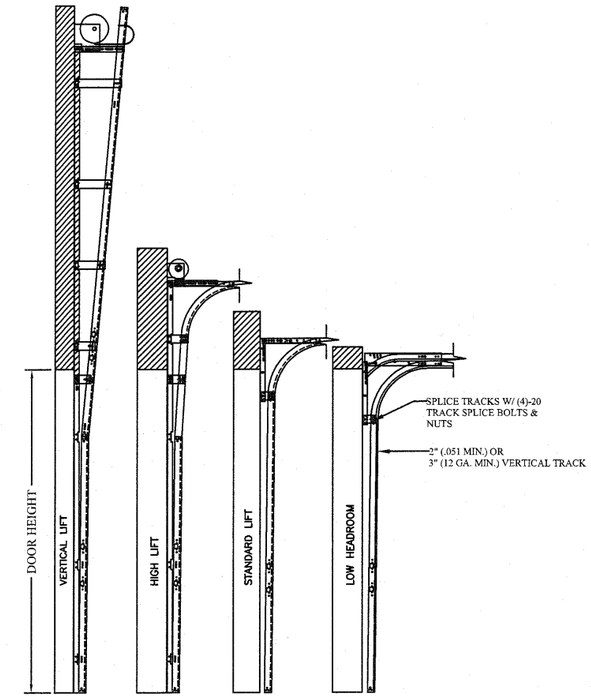

AVAILABLE TRACK CONFIGURATIONS
N.T.S.

TABLE 2

DOOR HEIGHT		TRACK ATTACHMENT											TYPICAL SPLICE
		A	B	C	D	E	F	G	H	I	J	K	
7'	0"	10.0"	34"	58"									76"
7'	6"	10.0"	34"	58"									82"
8'	0"	10.0"	34"	58"									88"
9'	0"	10.0"	34"	58"	82"								100"
9'	6"	10.0"	34"	58"	82"								106"
10'	0"	10.0"	34"	58"	82"								112"
11'	0"	10.0"	34"	58"	82"	106"							124"
12'	0"	10.0"	34"	58"	82"	106"							136"
13'	0"	10.0"	34"	58"	82"	106"	130"						148"
14'	0"	10.0"	34"	58"	82"	106"	130"						160"
15'	0"	10.0"	34"	58"	82"	106"	130"	154"					172"
16'	0"	10.0"	34"	58"	82"	106"	130"	154"					184"
17'	0"	10.0"	34"	58"	82"	106"	130"	154"	178"				196"
18'	0"	10.0"	34"	58"	82"	106"	130"	154"	178"				208"
19'	0"	10.0"	34"	58"	82"	106"	130"	154"	178"	202"			220"
20'	0"	10.0"	34"	58"	82"	106"	130"	154"	178"	202"			232"
21	0"	10.0"	34"	58"	82"	106"	130"	154"	178"	202"	226"		244"
22	0"	10.0"	34"	58"	82"	106"	130"	154"	178"	202"	226"		256"
23	0"	10.0"	34"	58"	82"	106"	130"	154"	178"	202"	226"	250"	268"
24	0"	10.0"	34"	58"	82"	106"	130"	154"	178"	202"	226"	250"	280"

ALL TRACK ATTACHMENTS +/- 2" ALLOWED USING SYP OR SPF NO.2 OR BETTER ONLY

REV	DESCRIPTION OF REVISIONS	DATE	BY

MAX SIZE
16'2 x 24'

DESIGN LOADS
+15.0 PSF
-17.0 PSF

TEST LOADS
+22.5 PSF
-25.5 PSF

Thomas L. Shelmerdine, PE (TX PE #85829)
Structural Solutions, PA (TX Firm #F-004063)

STATE OF TEXAS
THOMAS L. SHELMERDINE
85829
LICENSED
PROFESSIONAL ENGINEER

TX

5921-G W. Friendly Ave., Greensboro, NC 27410

ENTREMATIC

165 CARRIAGE COURT WINSTON-SALEM, N.C. 27105

MODEL 2700
MODEL 2720

SIZE	DRAWN BY	RS	DATE	09/30/14	DRAWING NUMBER
B	CHECKED BY	RLR	DATE	09/30/14	IBC-2716-104-15
					SHEET 4 OF 4