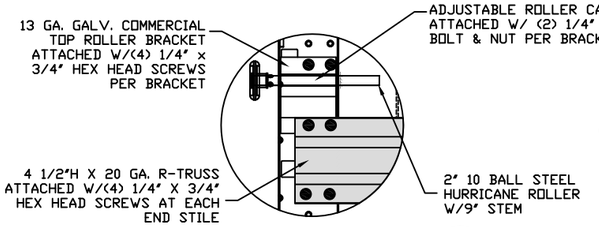

TYPICAL TOP FIXTURES (1)
N.T.S.

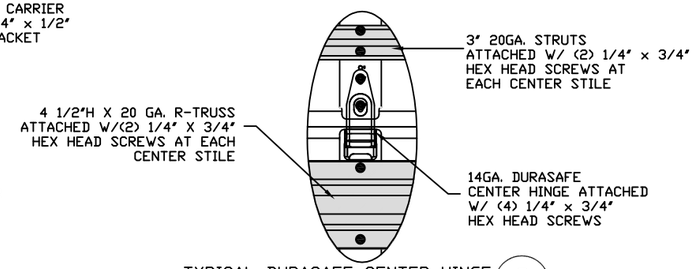

TYPICAL DURASAFE CENTER HINGE (2)
N.T.S.

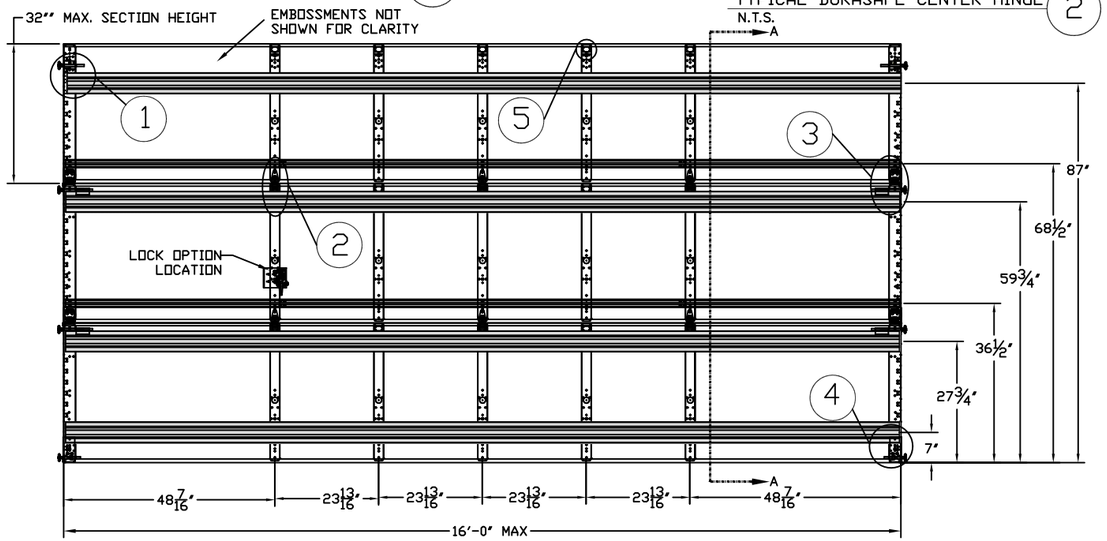

INSIDE ELEVATION
N.T.S.

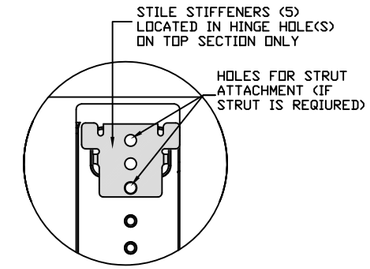

TYPICAL STILE STIFFENER (5)
N.T.S.

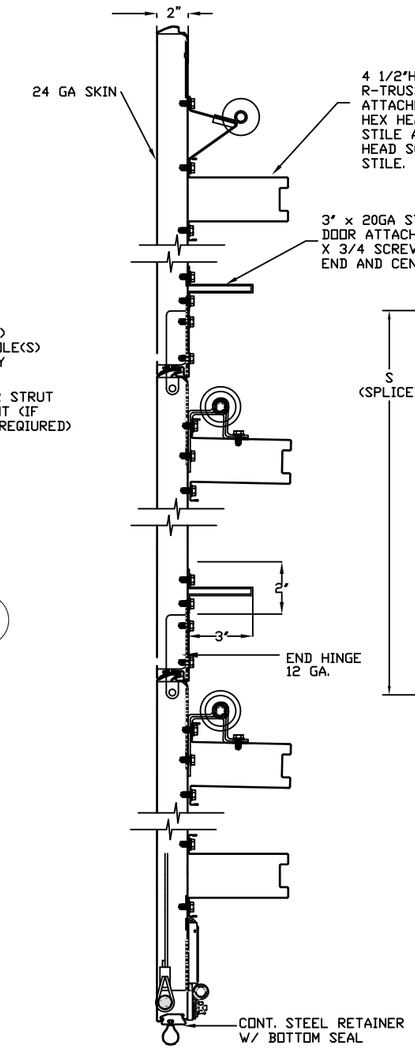

SECTION A–A (SIDE VIEW)
N.T.S.

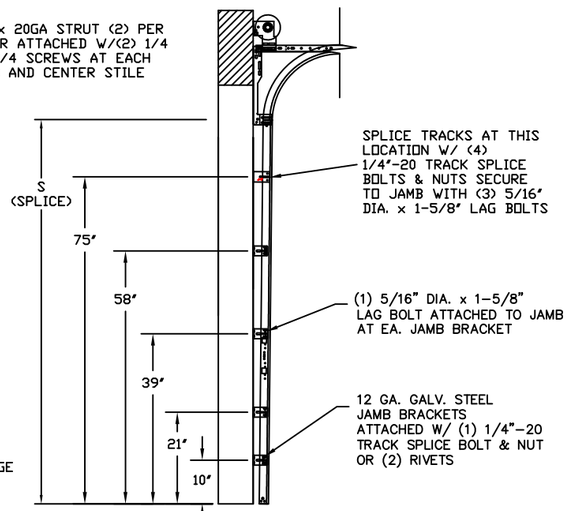

TRACK CONFIGURATION FOR 8' TALL DOORS
N.T.S.

ALL TRACK ATTACHMENT SPACING +/- 2" ALLOWED WITH SYP OR SPF NO. 2 OR BETTER

DOORS OVER 8' TALL, TRACK ATTACHMENT 10" FROM BOTTOM OF TRACK THEN 18" O.C. (+/- 2")

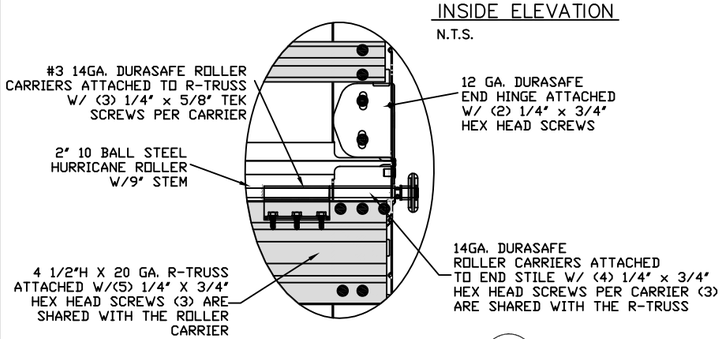

TYPICAL DURASAFE END HINGE (3)
N.T.S.

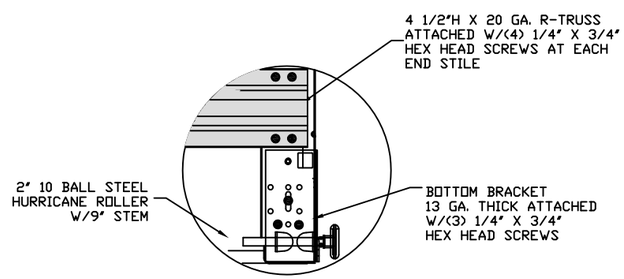

TYPICAL BOTTOM BRACKET (4)
N.T.S.

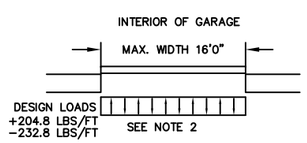

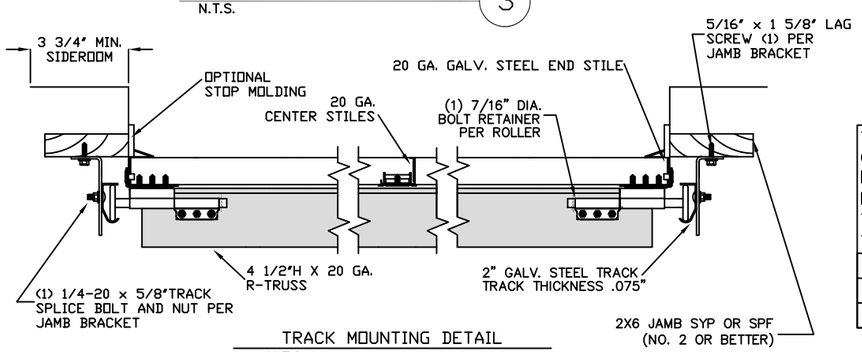

TRACK MOUNTING DETAIL
N.T.S.

THE METHOD OF TESTING WAS IN SUBSTANTIAL CONFORMANCE WITH THE PROCEDURE DESCRIBED IN ASTM E330 AND DASMA 108. THE PRESSURES SHOWN ON THE DRAWINGS WERE CALCULATED USING ASCE 7-98/02/05 WITH THE FOLLOWING PARAMETERS (5 FEET OF DOOR WIDTH IN THE END ZONE, ROOF AT ANY SLOPE, AND I=1.0):

WIND SPEED (MPH)	130	118	112	107	102
EXPOSURE LEVEL	B	C	C	D	D
MEAN ROOF HEIGHT	30'	15'	25'	15'	25'

SPECIFICATIONS AND NOTES

1. ALL THE LOAD FROM THE DOOR IS TRANSFERRED TO THE VERTICAL TRACK, FROM THE TRACK THE LOAD IS TRANSFERRED TO THE VERTICAL JAMBS. THE HORIZONTAL JAMB OR HEADER RECEIVES NO PORTION OF THE LOAD TRANSFERRED FROM THE DOOR.
2. EACH VERTICAL JAMBS RECEIVES MAXIMUM DESIGN LOADS OF: +204.8 LBS/FT & -232.8 LBS/FT
3. DOORS AND HARDWARE WILL BE DESIGNED, MANUFACTURED AND INSTALLED WITH STANDARDS AS SET FORTH BY DASMA.
4. DOOR SECTIONS SHALL BE 24 GA. MIN. (.022") ROLLED FORMED LIGHT COMMERCIAL QUALITY
5. SUPPORTING STRUCTURAL ELEMENTS SHALL BE DESIGNED BY A REGISTRED PROFESSIONAL ENGINEER FOR WIND LOADS INDICATED ON THIS DRAWING IN ADDITION TO OTHER LOADINGS.

REV	DESCRIPTION OF REVISIONS	DATE	BY
A	WIND SPEED TABLE & TRACK CONFIGURATIONS	4/25/12	RLR

MAX SIZE
16' x 14'

DESIGN LOADS
+25.6 PSF
-29.1 PSF

TEST LOADS
(1.5 x DESIGN LOADS)
+38.4 PSF
-43.7 PSF

Amarr
165 CARRIAGE COURT WINSTON-SALEM, N.C. 27105

MODEL #500 CLASSICA 1000, 2000

SIZE	DRAWN BY	DLJ	DATE	07/01/04	DRAWING NUMBER
B	CHECKED BY	AAE	DATE	07/01/04	IRC-5316-130-24

ENGINEER: THOMAS L. SHELMERDINE P.E. LIC. No. 0048579 | SHEET 1 OF 2

Section	Center Stile Locations (Measured from Left Edge)					Max Design Loads Allowed	
Width (ft)	1st (in)	2st (in)	3rd (in)	4th (in)	5th (in)	Positive (PSF)	Negitive (PSF)
09' 2	28.13	55.00	81.88			44.5	50.5
09' 4	28.63	56.00	83.38			43.7	49.6
09' 6	29.13	57.00	84.88			42.9	48.8
09' 8	29.63	58.00	86.38			42.2	47.9
09' 10	30.13	59.00	87.88			41.4	47.1
10' 0	30.63	60.00	89.38			40.8	46.3
10' 2	31.13	61.00	90.88			40.1	45.6
10' 4	31.63	62.00	92.38			39.4	44.8
10' 6	32.13	63.00	93.88			38.8	44.1
10' 8	32.63	64.00	95.38			38.2	43.4
10' 10	33.13	65.00	96.88			37.6	42.8
11' 0	33.63	66.00	98.38			37.1	42.1
11' 2	34.13	67.00	99.88			36.5	41.5
11' 4	34.63	68.00	101.38			36.0	40.9
11' 6	35.13	69.00	102.88			35.4	40.3
11' 8	35.63	70.00	104.38			34.9	39.7
11' 10	36.13	71.00	105.88			34.4	39.1
12' 0	24.625	48.31	72	95.688	119.38	25.8	29.3
12' 2	25.125	49.06	73	96.938	120.88	25.5	29.0
12' 4	25.625	49.81	74	98.188	122.38	25.3	28.7
12' 6	26.125	50.56	75	99.438	123.88	25.0	28.4
12' 8	26.625	51.31	76	100.69	125.38	24.8	28.1
12' 10	27.125	52.06	77	101.94	126.88	24.5	27.9
13' 0	27.625	52.81	78	103.19	128.38	24.3	27.6
13' 2	28.125	53.56	79	104.44	129.88	24.0	27.3
13' 4	28.625	54.31	80	105.69	131.38	23.8	27.1
13' 6	29.125	55.06	81	106.94	132.88	23.6	26.8
13' 8	29.625	55.81	82	108.19	134.38	23.3	26.5
13' 10	30.125	56.56	83	109.44	135.88	23.1	26.3
14' 0	30.625	57.31	84	110.69	137.38	22.9	26.0
14' 2	31.125	58.06	85	111.94	138.88	22.7	25.8
14' 4	31.625	58.81	86	113.19	140.38	22.5	25.6
14' 6	32.125	59.56	87	114.44	141.88	22.3	25.3
14' 8	32.625	60.31	88	115.69	143.38	22.1	25.1
14' 10	33.125	61.06	89	116.94	144.88	21.9	24.9
15' 0	33.625	61.81	90	118.19	146.38	21.7	24.7
15' 2	34.125	62.56	91	119.44	147.88	21.5	24.4
15' 4	34.625	63.31	92	120.69	149.38	21.3	24.2
15' 6	47.42	70.208	93.00	115.79	138.58	26.3	29.9
15' 8	48.02	71.008	94.00	116.99	139.98	26.0	29.6
15' 10	48.62	71.808	95.00	118.19	141.38	25.7	29.3
16' 0	48.42	72.208	96.00	119.79	143.58	25.6	29.1

SHADED BOXES INDICATE HINGE LOCATIONS

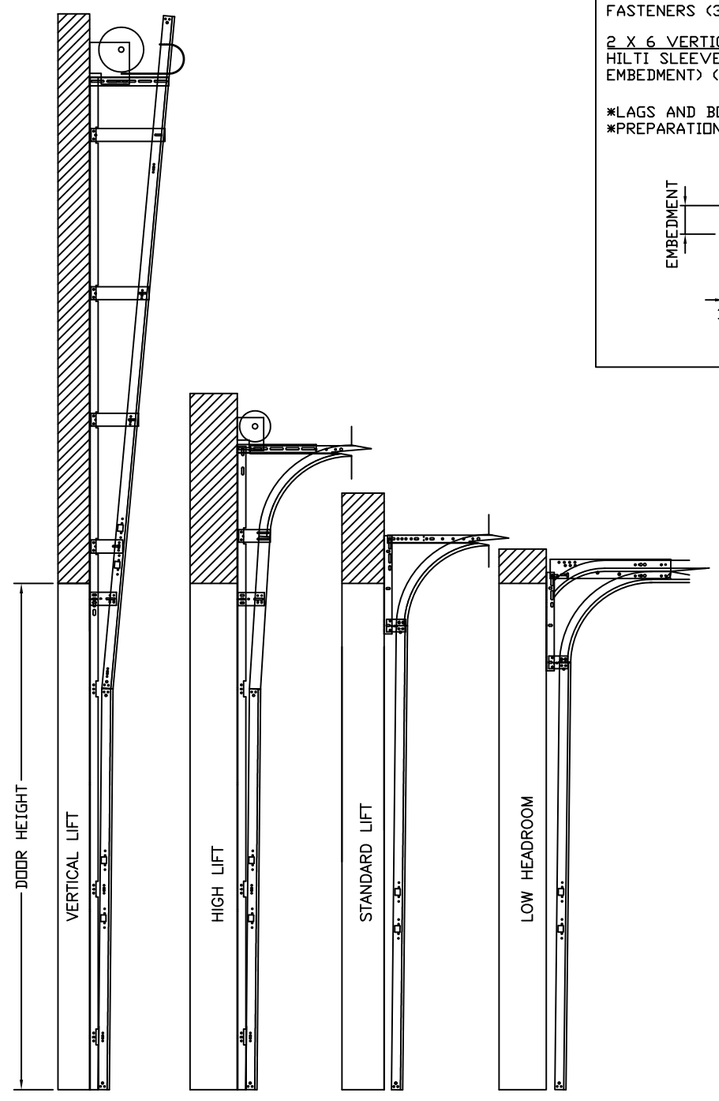

AVAILABLE TRACK CONFIGURATIONS
N.T.S.

WOOD JAMB ATTACHMENT TO STRUCTURE

2 X 6 VERTICAL JAMB ATTACHMENT TO WOOD FRAME STRUCTURE
5/16" X 3" LAG SCREWS STARTING 6" FROM ENDS THEN 24" O.C. (1 1/2" EMBEDMENT)
2 X 6 VERTICAL JAMB ATTACHMENT TO 2,000 PSI CONCRETE
HILTI KWIK BOLT 3/8" X 4" STARTING 6" FROM ENDS THEN 24" O.C. (2 1/2" EMBEDMENT)
HILTI SLEEVE ANCHOR 3/8" X 2-3/4" STARTING 6" FROM ENDS THEN 20" O.C. (1 1/4" EMBEDMENT)
ITW/RAMSET REDHEAD (TRU-BOLT) 3/8" X 4" STARTING 6" FROM ENDS THEN 24" O.C. (2 1/2" EMBEDMENT)
2 X 6 VERTICAL JAMB ATTACHMENT TO HOLLOW C-90 BLOCK
SIMPSON 1/4" X 3" TITEN SCREWS STARTING 6" FROM ENDS, USE PAIRS OF FASTENERS (3" APART) AT 16" O.C. (1 1/2" EMBEDMENT)
HILTI 1/4" X 2-3/4" KWIK-CON II+ SCREWS STARTING 6" FROM ENDS, USE PAIRS OF FASTENERS (3" APART) AT 16" O.C. (1 1/4" EMBEDMENT)

2 X 6 VERTICAL JAMB ATTACHMENT TO GROUTED C-90 BLOCK (2000 PSI GROUT)
HILTI SLEEVE ANCHOR 3/8" X 2-3/4" STARTING 6" FROM ENDS THEN 24" O.C. (1 1/4" EMBEDMENT) (OR, USE FASTENERS FOR HOLLOW C-90 BLOCK)

*LAGS AND BOLTS CAN BE COUNTERSUNK TO PROVIDE A FLUSH MOUNTING SURFACE.
*PREPARATION OF WOOD JAMBS BY OTHERS

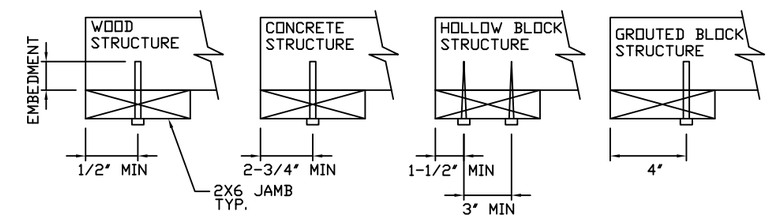

REV	DESCRIPTION OF REVISIONS	DATE	BY
A	WIND SPEED TABLE & TRACK CONFIGURATIONS	4/25/12	RLR

MAX SIZE
16' x 8'

DESIGN LOADS
+25.6 PSF
−29.1 PSF

TEST LOADS
(1.5 x DESIGN LOADS)
+38.4 PSF
−43.7 PSF

STATE OF TEXAS
06/28/2012
THOMAS L. SHELMERDINE
85829
LICENSED
PROFESSIONAL ENGINEER

Amarr
165 CARRIAGE COURT WINSTON-SALEM, N.C. 27105

MODEL #500
CLASSICA 1000, 2000

SIZE	DRAWN BY DLJ	DATE 07/01/04	DRAWING NUMBER
B	CHECKED BY AAE	DATE 07/01/04	IRC-5316-130-24
ENGINEER: THOMAS L. SHELMERDINE P.E. LIC. No. 0048579			SHEET 2 OF 2