| L'TR | REVISION | DATE | BY | E.C.O. |
|---|---|---|---|---|
| * | ORIGINAL ISSUE | 11/02/09 | R.M. | 1430 |

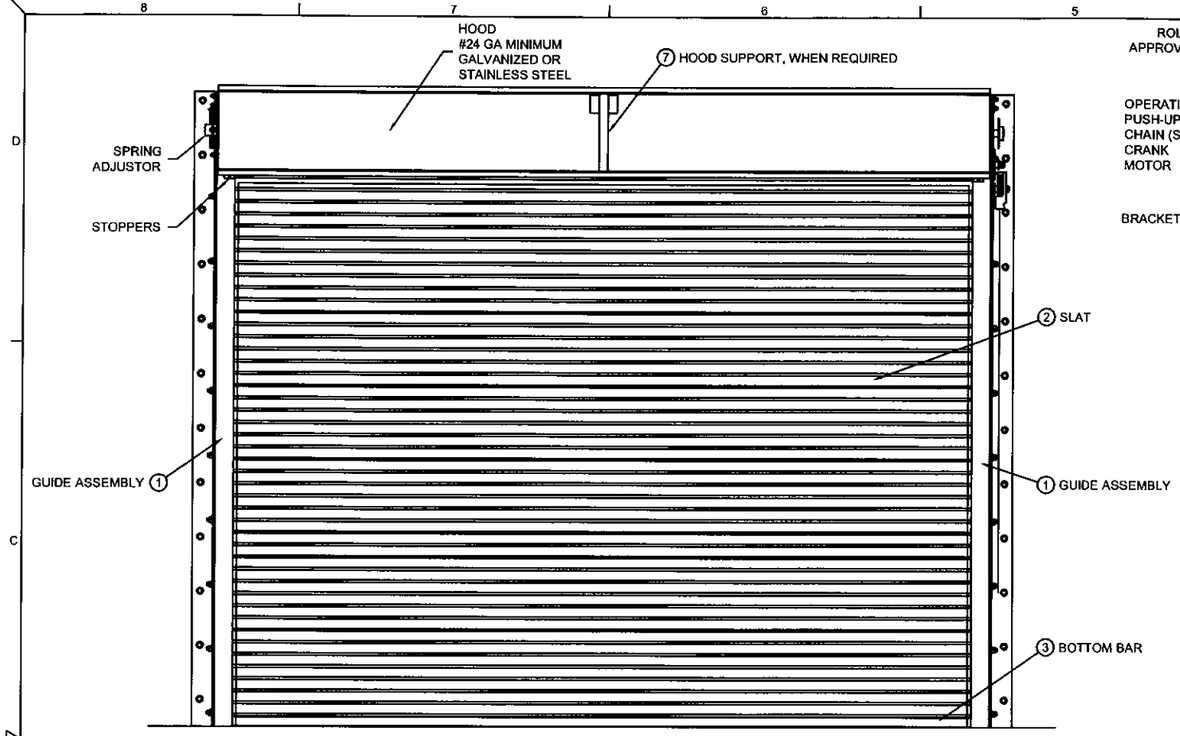


ROLL-UP MECHANISM NOT INCLUDED IN THIS APPROVAL. MUST BE CERTIFIED BY AN INDEPENDENT TESTING AGENCY IF REQUIRED.

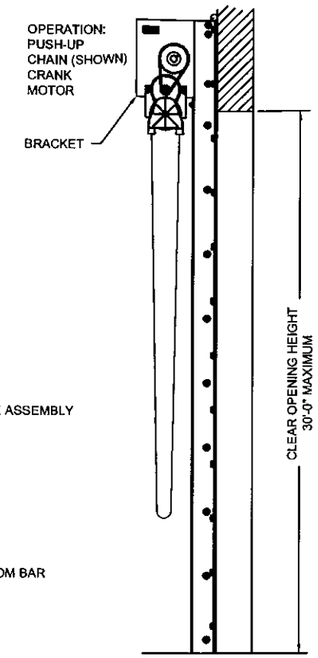


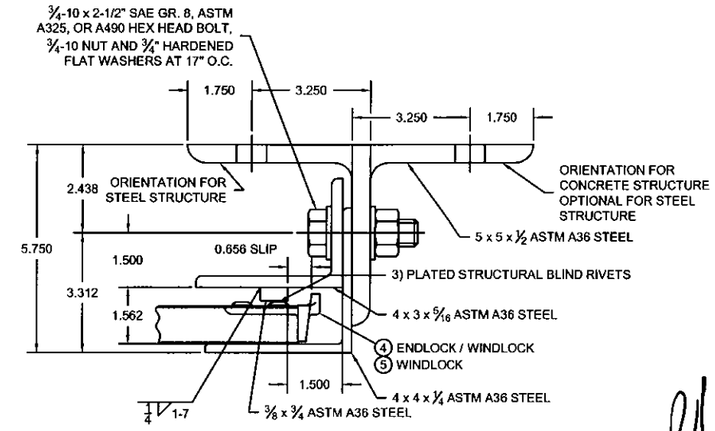


1 GUIDE ASSEMBLY DETAIL
1/2 SCALE

11/7/09
TX18627

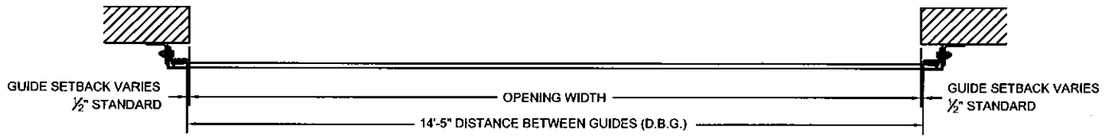


NOTES:
1. THIS ROLL-UP DOOR SYSTEM IS DESIGNED IN ACCORDANCE WITH THE LATEST EDITION INTERNATIONAL BUILDING CODE AND FLORIDA BUILDING CODE. AS A LARGE MISSILE IMPACT RESISTANT SYSTEM.

2. POSITIVE AND NEGATIVE DESIGN PRESSURE CALCULATIONS SHALL BE PERFORMED FOR SPECIFIC JOBS IN ACCORDANCE WITH ASCE 7 *MINIMUM DESIGN LOADS FOR BUILDINGS AND OTHER STRUCTURES*, WIND LOADS DETERMINED FOR OPENINGS SHALL BE LESS THAN OR EQUAL TO DOOR DESIGN PRESSURES NOTED BELOW.

3. THE DETAILS AND SPECIFICATIONS SHOWN HEREIN REPRESENT THE PRODUCTS TESTED FOR UNIFORM STATIC AIR PRESSURE IN CONFORMANCE WITH DADE COUNTY PROTOCOLS TAS 201, 202 AND 203.
POSITIVE DESIGN LOAD = 120 PSF
NEGATIVE DESIGN LOAD = 120 PSF

4. TESTING PERFORMED BY CERTIFIED TESTING LABORATORIES (ORLANDO, FL.) TEST REPORT No. CTLA-1600W.

5. SUPERIMPOSED LOADS ON THE JAMBS FROM THIS DOOR ARE DESIGNATED AS F1, F2 AND F3 HEREIN. CONTRACTORS SHALL HAVE LICENSED AND REGISTERED ENGINEER OR ARCHITECT VERIFY ADEQUACY OF BUILDING STRUCTURE TO RESIST SUPERIMPOSED LOADS F1, F2, AND F3.

6. ALL WELDING SHALL BE PERFORMED BY QUALIFIED WELDERS IN ACCORDANCE WITH AWS SPECIFICATIONS, LATEST EDITION. ALL WELDING ELECTRODES SHALL CONFORM TO AWS A5.1, GRADE E-70. MINIMUM WELDING PROCESS SHALL BE ARC WELDING AWS E7014 OR MIG WELDING AWS ER70S-6.

7. ANCHOR NOTES:
A. EMBEDMENT DEPTH DOES NOT INCLUDE STUCCO FINISH.
B. ANCHORS SHALL BE INSTALLED IN ACCORDANCE WITH MANUFACTURERS SPECIFICATIONS.

8. FOAMED IN PLACE INSULATION, TESTED IN ACCORDANCE WITH ASTM E-84 AND D-1929 OR
MINERAL WOOL INSULATION.

9. DOOR MAY BE INSTALLED ON THE INSIDE OR OUTSIDE OF AN EXTERIOR WALL.

10. A 33% INCREASE IN ALLOWABLE STRESS HAS NOT BEEN USED IN THE DESIGN OF THIS PRODUCT.

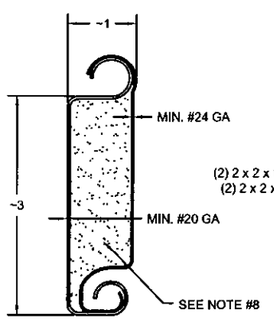


2 SLAT DETAIL
TYPICAL SECTION
ASTM A653 HSLAS TYPE B GRADE 40 G60 OR
ASTM A653 HSLAS TYPE A GRADE 40 G60 OR
ASTM A653 STRUCTURAL STEEL GRADE 40 G60
OR TYPE 304 STAINLESS STEEL (MIN. YIELD 40,000 psi)
OR TYPE 430 STAINLESS STEEL (MIN. YIELD 40,000 psi)
OR TYPE 201 STAINLESS STEEL (MIN. YIELD 40,000 psi)
FULL SCALE

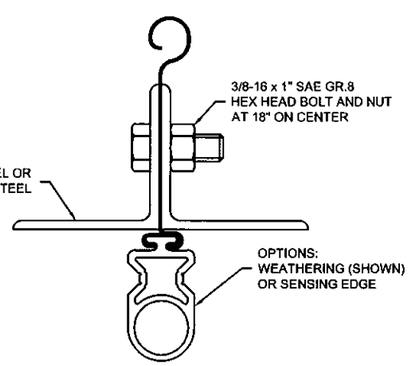


3 BOTTOM BAR DETAIL
TYPICAL SECTION
FULL SCALE

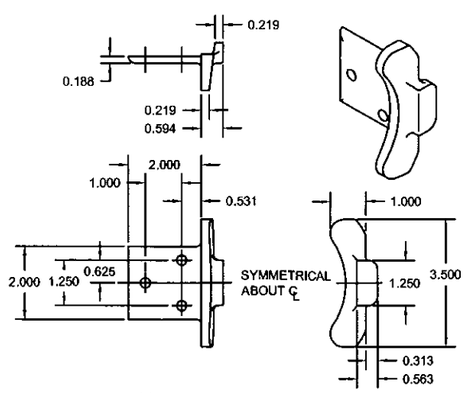


4 ENDLOCK / WINDLOCK DETAIL
CAST MALLEABLE IRON ASTM A47, GRADE 32510, OR
DUCTILE IRON PER ASTM A536 GRADE 65-45-12, GALVANIZED IN
ACCORDANCE WITH ASTM A123, GRADE 85 ZINC-COATING
1/2 SCALE

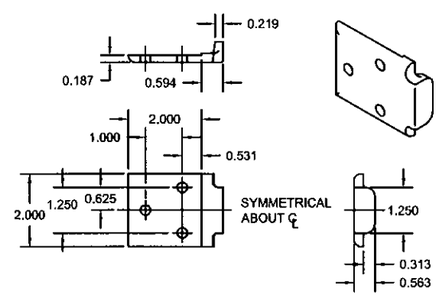


5 WINDLOCK DETAIL
CAST MALLEABLE IRON ASTM A47, GRADE 32510, OR
DUCTILE IRON PER ASTM A536 GRADE 65-45-12, GALVANIZED IN
ACCORDANCE WITH ASTM A123, GRADE 85 ZINC-COATING
1/2 SCALE

CORNELL
100 ELMWOOD AVENUE
CRESTWOOD INDUSTRIAL PARK
MOUNTAINTOP, PA 18707

TITLE
14'-5" WIDE 120 PSF INSULATED
ROLLING STEEL DOOR

| SIZE | DRAWN | DWG NO | REV |
|---|---|---|---|
| D | R. MAGGIO | ES16-42B | * |
| SCALE 1:16 & AS NOTED | | SHEET 1 OF 2 | |

| LTR | REVISION | DATE | BY | E.C.O. |
|---|---|---|---|---|
| * | ORIGINAL ISSUE | 11/02/09 | R.M. | 1430 |

| CONCRETE FASTENER SPACING | | |
|---|---|---|
| CONCRETE STRENGTH (psi) | MAXIMUM FASTENER SPACING (in.) | |
| | HILTI | SIMPSON |
| 3000 | 7 1/2 | 8 |
| 4000 | 11 | 9 1/2 |

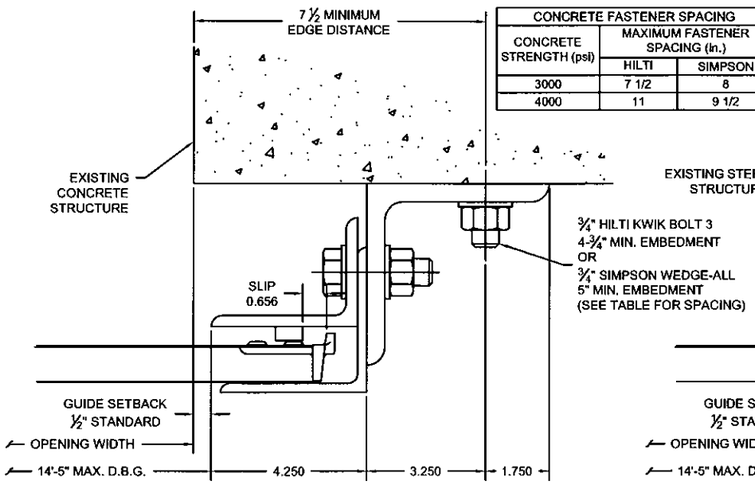


GUIDE ASSEMBLY
CONCRETE STRUCTURE

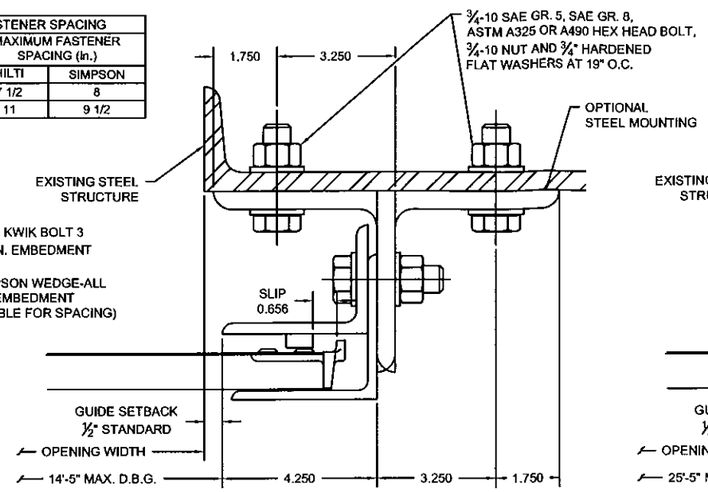


GUIDE ASSEMBLY
STEEL STRUCTURE

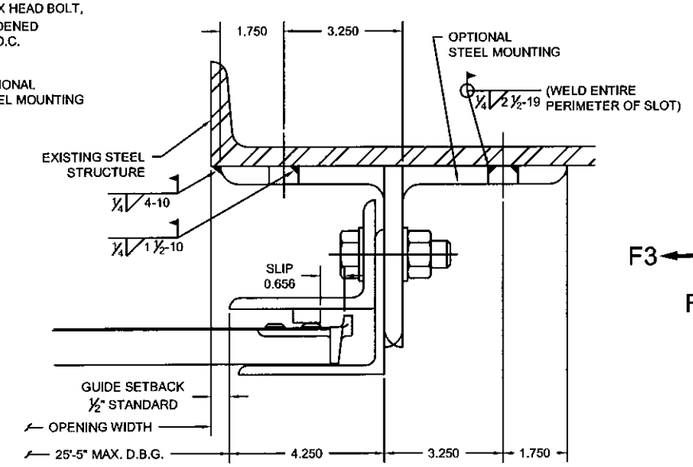


GUIDE ASSEMBLY
STEEL STRUCTURE

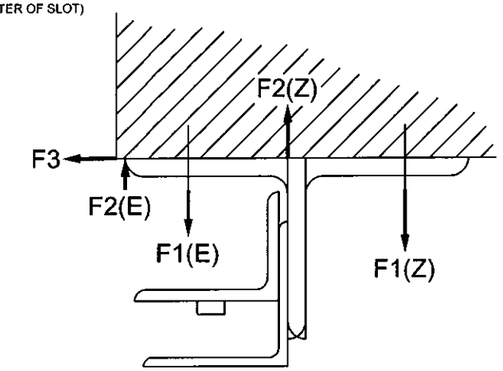


UNREDUCED WIND FORCES ON BUILDING STRUCTURE

*BUILDING DESIGNER NOTE*:
STRUCTURE MUST BE DESIGNED TO SUPPORT F1, F2, AND F3 FORCES (LBS./FT. OF OPENING HEIGHT) AT EACH JAMB.

| FORCES ON STRUCTURE (LBS / FOOT OF HEIGHT) | | | | | | | | | | | |
|---|---|---|---|---|---|---|---|---|---|---|---|
| Z-GUIDE | | | | | | E-GUIDE | | | | | |
| POSITIVE | | | NEGATIVE | | | POSITIVE | | | NEGATIVE | | |
| F1 | F2 | F3 | F1 | F2 | F3 | F1 | F2 | F3 | F1 | F2 | F3 |
| 2287 | 1422 | 2614 | 4134 | 4999 | 2614 | 6471 | 5606 | 2614 | 5454 | 6319 | 2614 |

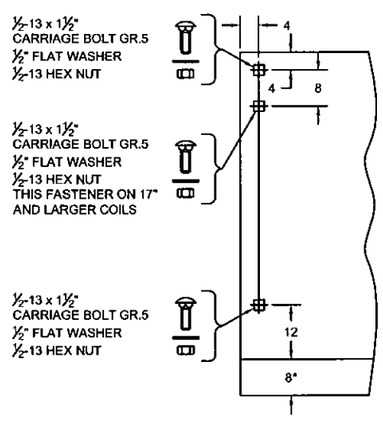


⑥ BRACKET MOUNTING DETAIL
0.172 MIN. THICKNESS
* 2" EXTENSION WHEN 8" AND LARGER SHAFT ASSEMBLY IS SUPPLIED
SCALE: FULL

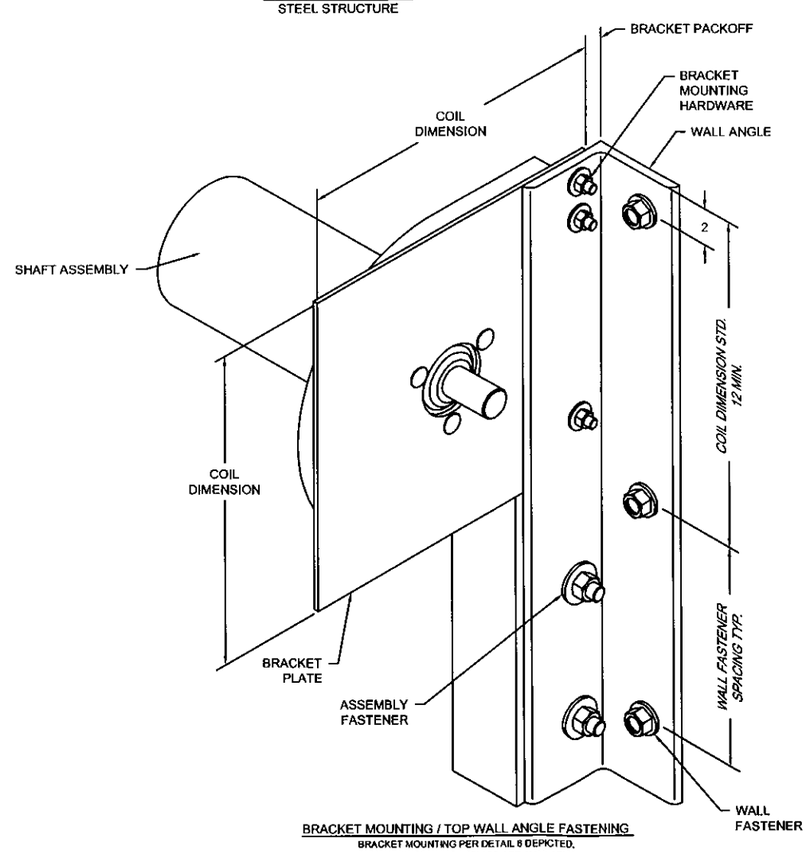


BRACKET MOUNTING / TOP WALL ANGLE FASTENING
BRACKET MOUNTING PER DETAIL 6 DEPICTED.
OTHER BRACKET MOUNTINGS ARE AVAILABLE
SCALE: NTS

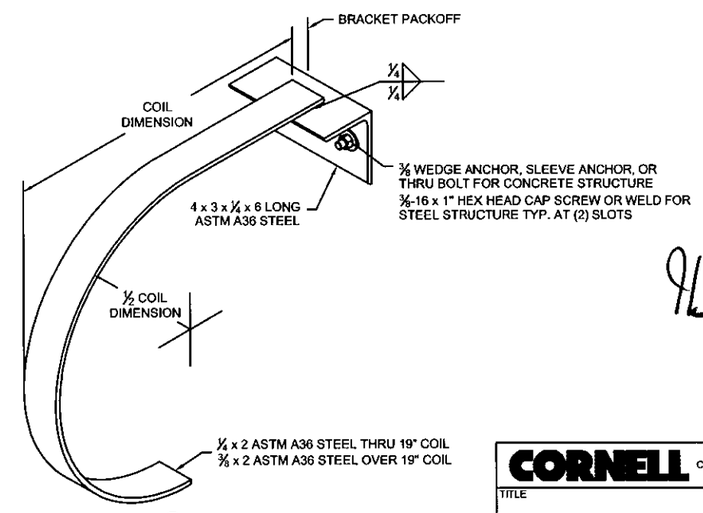


⑦ MID-HOOD SUPPORT DETAIL
*(WHEN REQUIRED)*
SCALE: NTS

11/7/09
TX 18627


CORNELL
100 ELMWOOD AVENUE
CRESTWOOD INDUSTRIAL PARK
MOUNTAINTOP, PA 18707


TITLE
14'-5" WIDE 120 PSF INSULATED ROLLING STEEL DOOR

| SIZE | DRAWN | DWG NO | REV |
|---|---|---|---|
| D | R. MAGGIO | ES16-42B | * |
| SCALE 1:2 & AS NOTED | | SHEET 2 OF 2 | |