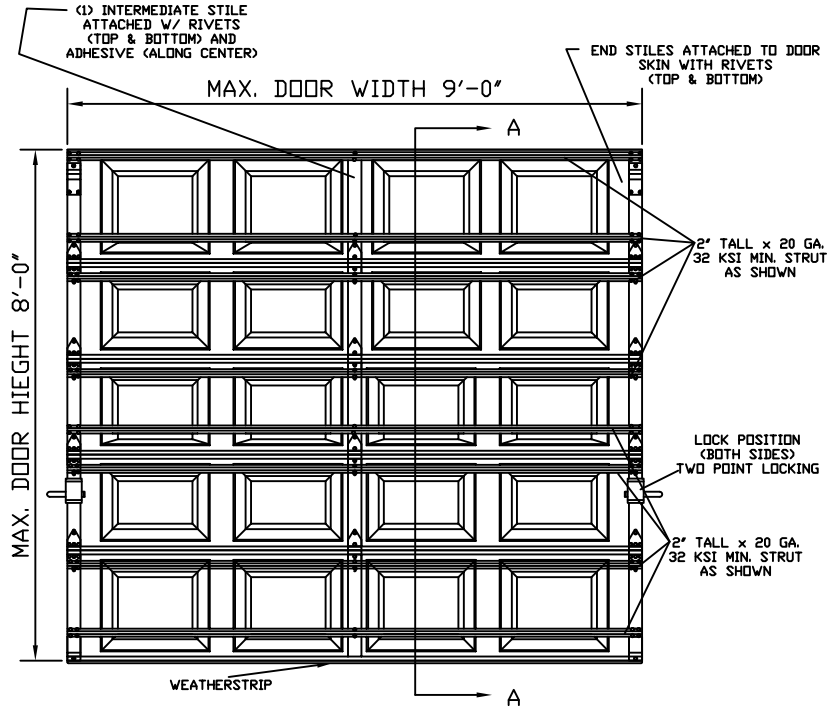

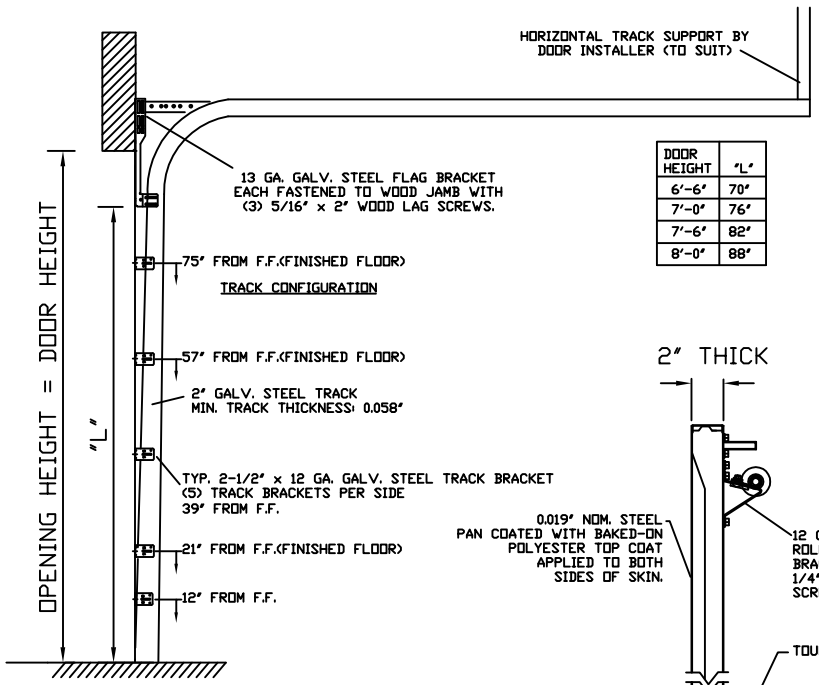

DOOR HEIGHT	"L"
6'-6"	70"
7'-0"	76"
7'-6"	82"
8'-0"	88"

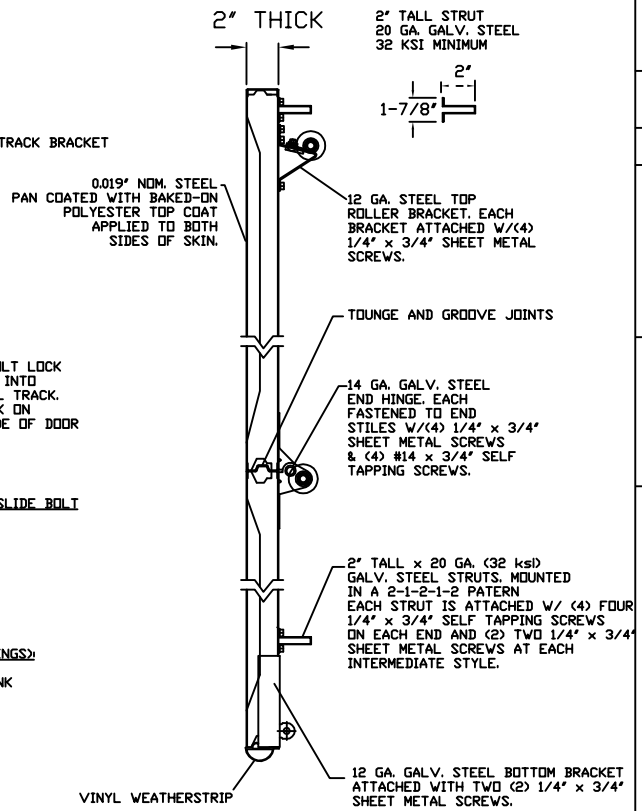

SECTION A-A (SIDE VIEW)

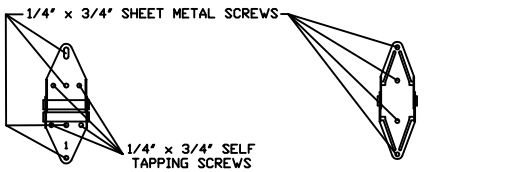

14 GA. END HINGES
VIEW A

18 GA. INTERMEDIATE HINGES
VIEW C

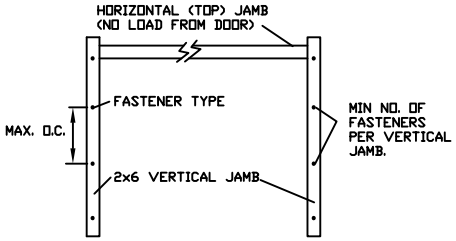

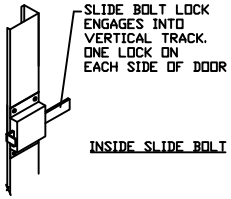

INSIDE SLIDE BOLT

VERTICAL 2x6 JAMB ATTACHMENT (WOOD FRAME BUILDINGS):
3/8" x 3" LAG SCREW W/ 1-1/8" WASHER @ 24" O.C.
MIN. 1-1/2" EMBED. LAG SCREWS MAY BE COUNTER SUNK 1/2" TO PROVIDE A FLUSH MOUNTING SURFACE.
HORIZONTAL JAMBS DO NOT TRANSFER LOAD.
(REFERENCE DASMA TECHNICAL DATA SHEET #161)

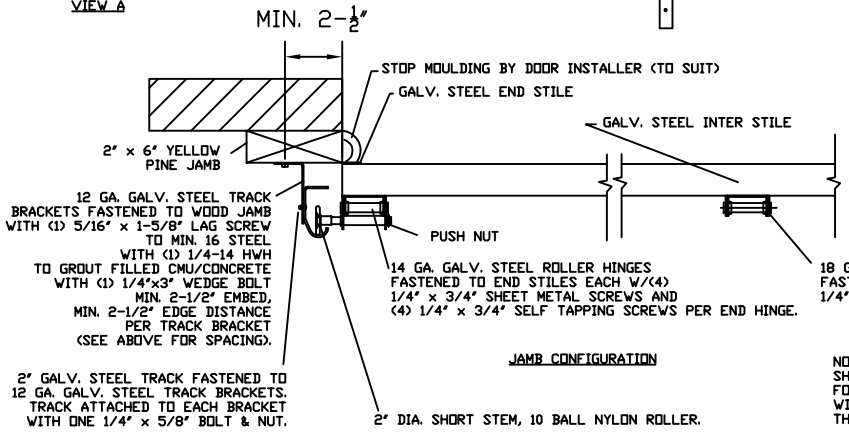

JAMB CONFIGURATION

NOTE: THE DESIGN OF THE SUPPORTING STRUCTURAL ELEMENTS SHALL BE THE RESPONSIBILITY OF THE PROFESSIONAL OF RECORD FOR THE BUILDING OR STRUCTURE AND IN ACCORDANCE WITH CURRENT BULIDING CODES FOR THE LOADS LISTED ON THIS DRAWING.

DOOR DESIGN PRESSURES
± 23.0 PSF
JAMB DESIGN PRESSURES
± 103.5 plf

REV.	DATE	REVISIONS	BY:
A	02/09/06	CHANGED TO J.M. MARKED UP PRINTS	MEC
B	02/28/06	CHANGED TO J.M. MARKED UP PRINTS	MEC
C	03/31/06	CHANGED TO J.M. MARKED UP PRINTS	MEC

Able\9x8W4.dwg
CAD FILE NAME

CHECKED BY: DATE:
APPROVED BY: DATE:

DATE: 01/11/06
DRAWN BY: M.E.C.
SCALE: USE DIMS SHOWN

ABLE DOOR MANUFACTURING
5707 Mitchelldale
Houston, TX 77092
800.243.3990, Fax 713.682.4284

9 x 8 GARAGE DOOR
825WL-D
REV. C.

SHEET No. 1 OF 1