ASSOCIATED MATERIALS
INCORPORATED

3773 STATE ROAD
CUYAHOGA FALLS, OH 44223

SERIES 5200
EXTRUDED VINYL SLIDING PATIO DOORS
"IMPACT"

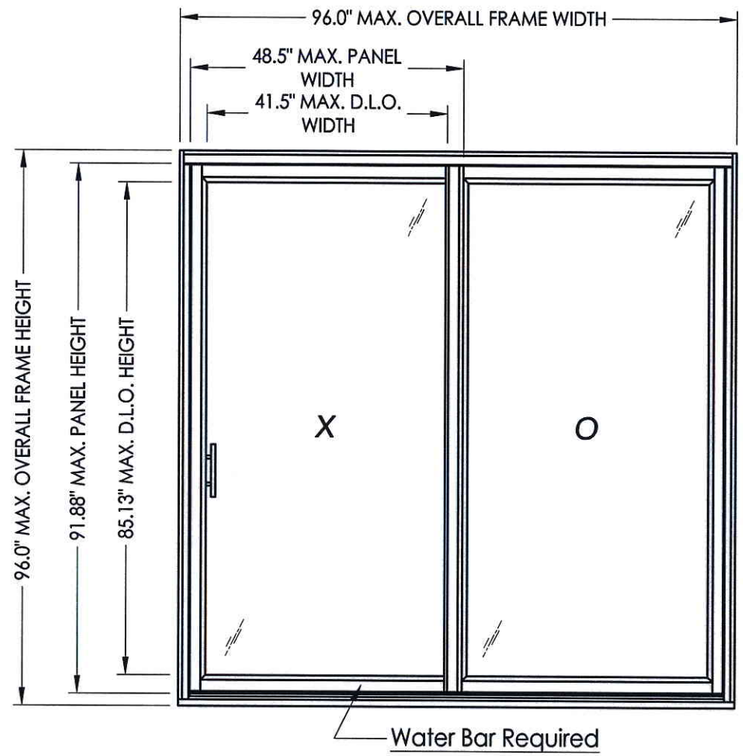

EVALUATED FOR USE IN THE STATE OF TEXAS

The Sliding Glass Door system described herein complies with the 2006 International Residential Code (IRC), Sections R301 & R613 and the 2006 International Building Code (IBC), Sections 1405.12, 1609, 1714.5, 2403 and 2404 (including Texas revisions) subject to the following conditions:

1. Anchors shall be as listed and spaced as shown in the details. Anchor embedment to base material shall be beyond wall dressing or stucco.
2. This system has been tested and evaluated as a large missile impact protective system for installation in the Seaward, Inland I and Inland II areas. This product meets missile level "D" as defined in ASTM E 1996.
3. Allowable design pressure requirements must be equal to or less than the design pressure rating shown in the design pressure chart, sheet 1 of this drawing.
4. Conditions not covered by this drawing are subject to further engineering analysis.

TABLE OF CONTENTS

SHEET#	DESCRIPTION
1	Typical elevation, design pressures & general notes
2	Horizontal and vertical cross sections
3	Frame anchoring
4	Bill of materials, glazing detail & components

OVERALL FRAME DIMENSION	MAX. PANEL DIMENSION	MAX. D.L.O. DIMENSION	DESIGN PRESSURE (PSF)	
			POSITIVE	NEGATIVE
96.0" x 96.0"	48.5" X 91.88"	41.5" X 85.13"	+60.0	-60.0

STATE OF TEXAS
LYNDON F. SCHMIDT
104123
LICENSED
PROFESSIONAL ENGINEER
3-7-13

Documents Prepared By: Lyndon F. Schmidt, P.E.
TEXAS P.E. #104123
RW BUILDING CONSULTANTS, INC.
P.O. Box 230 Valrico FL. 33595
Phone No.: 813.659.9197
TEXAS BOARD OF PROFESSIONAL ENGINEERS
CERTIFICATE OF REGISTRATION # F-11852

PRODUCT: EXTRUDED VINYL SLIDING PATIO DOORS

PART OR ASSEMBLY: TYPICAL ELEVATION, DESIGN PRESSURES & GENERAL NOTES

NO.	DATE	BY

REVISIONS

DATE: 3/07/13
SCALE: N.T.S.
DWG. BY: JK
CHK. BY: LFS
DRAWING NO.: TX-4268
SHEET 1 OF 4

© 2013 R.W. BUILDING CONSULTANTS INC.

R:\A - Projects\Project Folders\proj 1401-1500\PF 1457\D. RWBC Drawings\TX-2012\TX-4268-69.dwg, TX-4268

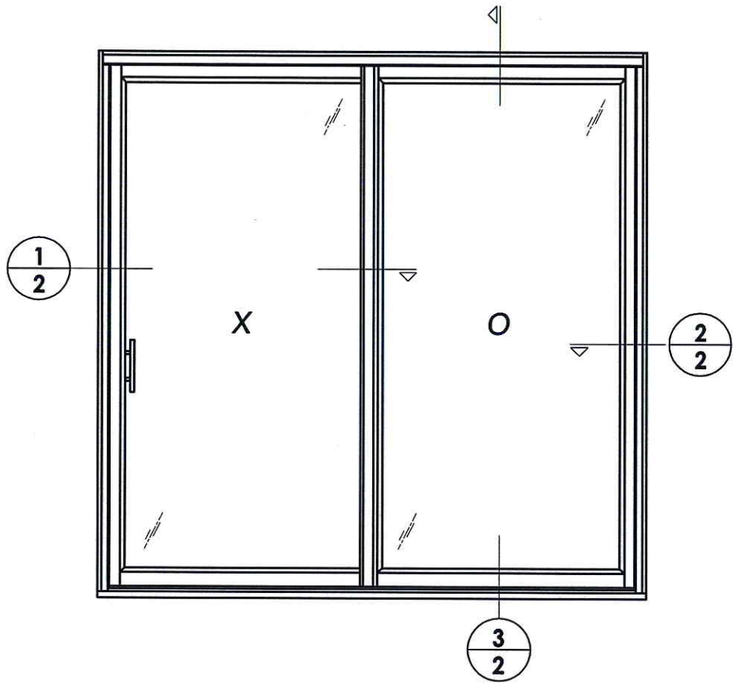

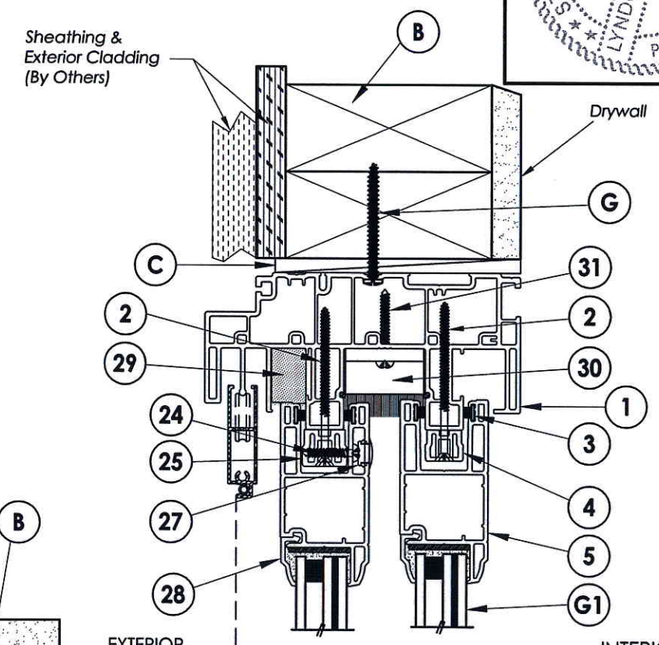

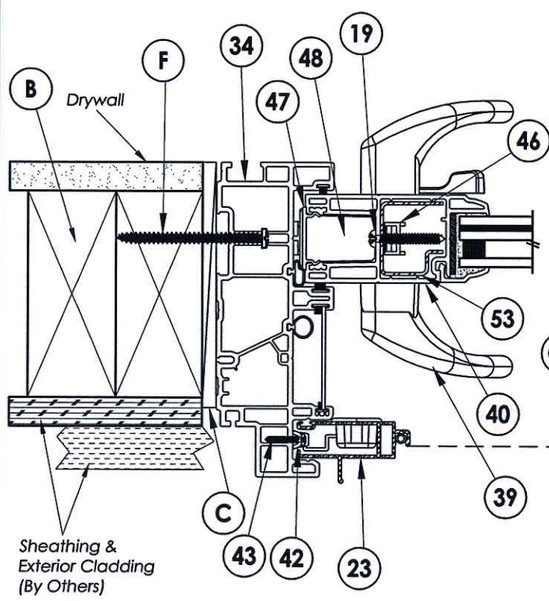

1/2 **HORIZONTAL CROSS SECTION**

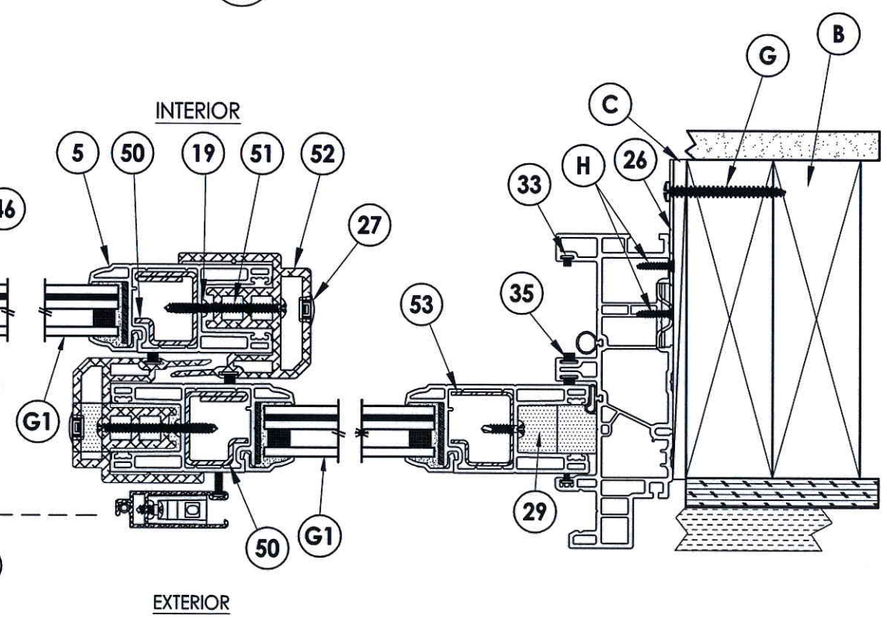

2/2 **HORIZONTAL CROSS SECTION**
Shown w/ optional strap anchor

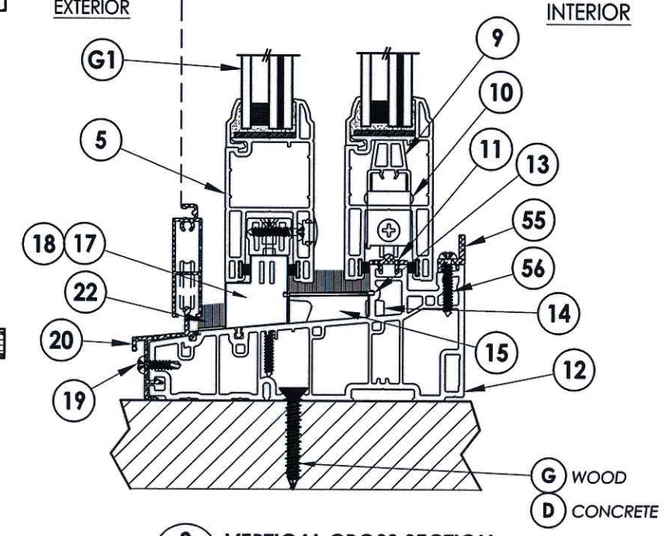

3/2 **VERTICAL CROSS SECTION**

STATE OF TEXAS
LYNDON F. SCHMIDT
104123
LICENSED
PROFESSIONAL ENGINEER
3-7-13

Documents Prepared By: Lyndon F. Schmidt, P.E.
TEXAS P.E. #104123

RW BUILDING CONSULTANTS, INC.
P.O. Box 230 Valrico FL. 33595
Phone No.: 813.659.9197

TEXAS BOARD OF PROFESSIONAL ENGINEERS
CERTIFICATE OF REGISTRATION # F-11852

PRODUCT: EXTRUDED VINYL SLIDING PATIO DOORS

PART OR ASSEMBLY: HORIZONTAL & VERTICAL CROSS SECTIONS

NO.	DATE	REVISIONS	BY

DATE: 3/07/13
SCALE: N.T.S.
DWG. BY: JK
CHK. BY: LFS
DRAWING NO.: TX-4268
SHEET 2 OF 4

© 2013 R.W. BUILDING CONSULTANTS INC.

R:\A - Projects\Project Folders\proj 1401-1500\PF 1457\D. RWBC Drawings\TX-2012\TX-4268-69.dwg, 1-2

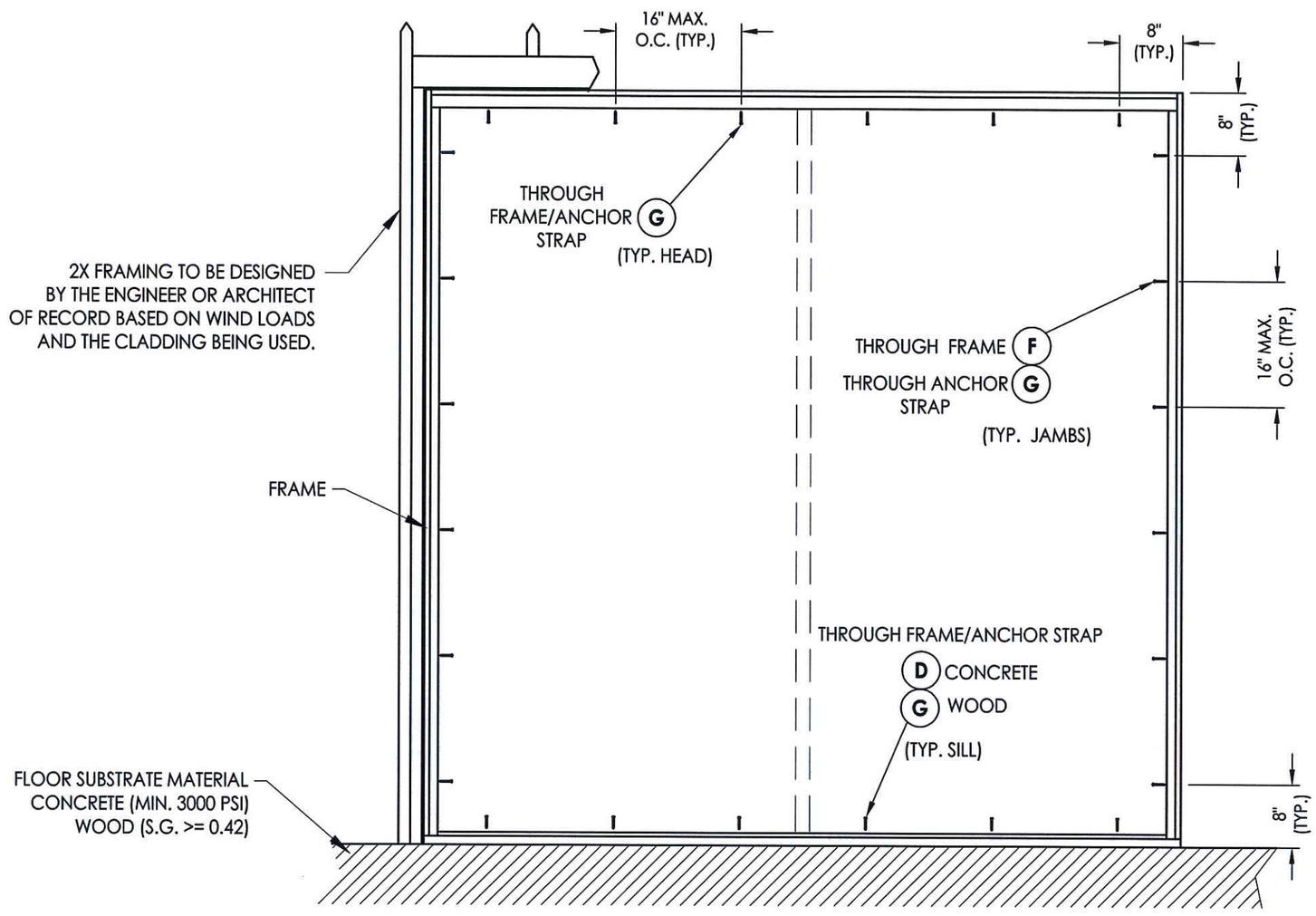

FRAME ANCHORING

CONCRETE ANCHOR NOTES:

1. Concrete anchor locations at the corners may be adjusted to maintain the min. edge distance to mortar joints.
2. Concrete anchor locations noted as "MAX. ON CENTER" must be adjusted to maintain the min. edge distance to mortar joints, additional concrete anchors may be required to ensure the "MAX. ON CENTER" dimension are not exceeded.
3. Concrete anchor table:

ANCHOR TYPE	ANCHOR SIZE	MIN. EMBEDMENT	MIN. CLEARANCE TO MASONRY EDGE	MIN. CLEARANCE TO ADJACENT ANCHOR
ITW TAPCON®	1/4"	1-3/4"	3"	4"
ELCO ULTRACON®	1/4"	1-3/4"	2-1/2"	3"

STATE OF TEXAS
LYNDON F. SCHMIDT
104123
LICENSED
PROFESSIONAL ENGINEER
3-7-13

Documents Prepared By: Lyndon F. Schmidt, P.E.
TEXAS P.E. #104123
RW BUILDING CONSULTANTS, INC.
P.O. Box 230 Valrico FL. 33595
Phone No.: 813.659.9197
TEXAS BOARD OF PROFESSIONAL ENGINEERS
CERTIFICATE OF REGISTRATION # F-11852

PRODUCT: EXTRUDED VINYL SLIDING PATIO DOORS

PART OR ASSEMBLY: FRAME ANCHORING

NO.	DATE	BY

REVISIONS

DATE: 3/07/13
SCALE: N.T.S.
DWG. BY: JK
CHK. BY: LFS
DRAWING NO.: TX-4268
SHEET 3 OF 4

© 2013 R.W. BUILDING CONSULTANTS INC.

R:\A - Projects\Project Folders\proj 1401-1500\PF 1457\D. RWBC Drawings\TX-2012\TX-4268-69.dwg, 1-3

BILL OF MATERIALS

ITEM #	DESCRIPTION	MATERIAL
B	2X FRAMING (G >= 0.42)	WOOD
C	1/4" MAX. SHIM SPACE	-
D	1/4" ELCO OR ITW CONCRETE SCREW (1-1/4" MIN. EMBEDMENT)	STEEL
F	#10 x 2-1/2" PPH SMS (1-1/2" MIN. EMBEDMENT)	STEEL
G	#10 x 2" PPH SMS (1-1/2" MIN. EMBEDMENT)	STEEL
H	#10 X 5/8" FH QUADREX SCREW	STEEL
1	FRAME HEAD*	PVC
2	#8 x 2-3/4" FH QUADREX WOOD SCREW	STEEL
3	WEATHERSTRIP (SCHLEGEL #HF-7522-270)	-
4	HEAD TRACK*	PVC
5	STILE & RAIL*	PVC
6	SETTING BLOCK	-
7	SILICONE (SIKA 552)	SILICONE
8	DURASEAL SPACER SYSTEM	-
9	SHIM	-
10	TANDEM WHEEL	STEEL
11	ROLLING RAIL	STEEL
12	SILL*	PVC
13	SILL DUST COVER*	PVC
14	SILL PLUG*	PVC
15	SILL WEATHERSEAL	-
17	LEFT CAP FOR SILL ADAPTER*	PVC
18	RIGHT CAP FOR SILL ADAPTER*	PVC
19	#8 X 5/8" PAN HEAD, SQUARE, SELF-DRILLING SCREW	STEEL
20	OUTSIDE SILL CLADDING	STEEL
22	INSECT STOP	-
23	SCREEN	-
24	#8 X 7/8" PAN HEAD QUADREX SCREW	STEEL
25	FIXED PANEL ANCHOR BLOCK*	PVC
26	ANCHOR STRAP	STEEL
27	SCREW CAP*	PVC
28	GLAZING BEAD*	PVC
29	FOAM PLUG	-
30	HEAD WEATHERSEAL	-
31	#8 X 1-1/4" PAN HEAD QUADREX SCREW	STEEL
33	WEATHERSTRIP	-
34	FRAME JAMB*	PVC
35	WEATHERSTRIP	-
39	HANDLE KIT	STEEL
40	OPERATING PANEL SIDE STILE*	PVC
42	KEEPER FOR SCREEN	-
43	#4 X 5/8" PAN HEAD QUADREX SCREW	STEEL
46	STAINLESS STEEL DOUBLE POINT MORTISE LOCK KIT	STEEL
47	SASH COVERING CAP*	PVC
48	LOCK PLUG*	PVC
50	STILE REINFORCEMENT	STEEL
51	#8 X 2" TRUSS HEAD QUADREX SCREW	STEEL
52	INTERLOCK	STEEL
53	STILE REINFORCEMENT	STEEL
55	WATER BAR	STEEL
56	#8 X 1" PPH SMS	SS

* THE APPROVED WHITE RIGID PVC EXTERIOR EXTRUSIONS FOR WINDOWS ARE TO BE PRODUCED BY EXTRUDERS LICENSEES IN "AAMA CERTIFICATION PROGRAMS FOR RIGID PVC EXTRUSIONS".

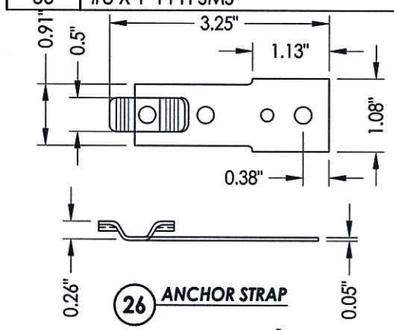

26 ANCHOR STRAP

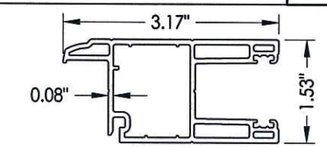

5 STILE, RAIL

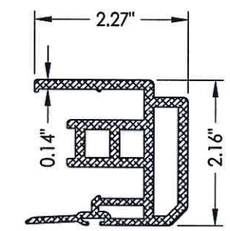

52 INTERLOCK

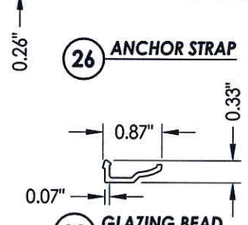

28 GLAZING BEAD

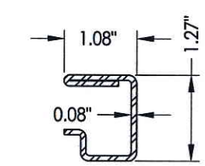

50 REINFORCEMENT
Meeting rail

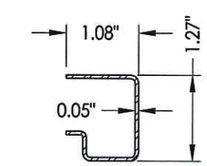

53 REINFORCEMENT
Stile

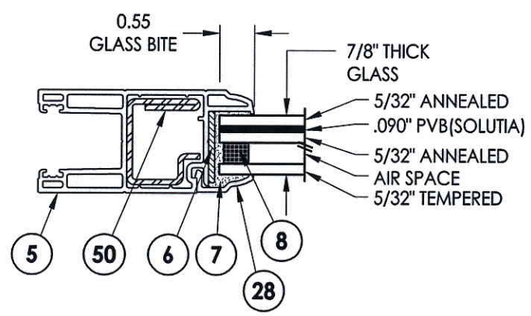

G1 GLAZING DETAIL

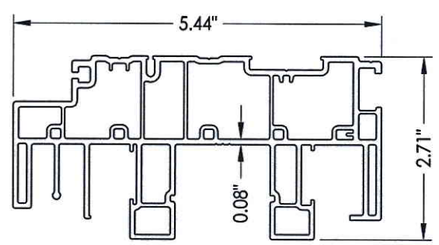

1 FRAME HEAD

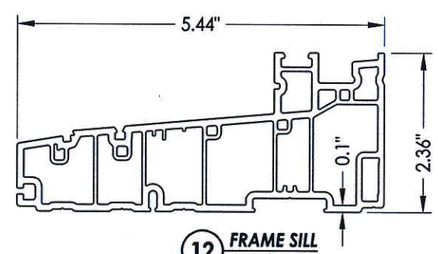

12 FRAME SILL

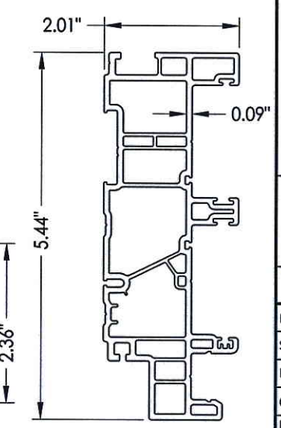

34 FRAME JAMB

STATE OF TEXAS
LYNDON F. SCHMIDT
104123
LICENSED
PROFESSIONAL ENGINEER
3-7-13

Documents Prepared By: Lyndon F. Schmidt, P.E.
TEXAS P.E. #104123

RW BUILDING CONSULTANTS, INC.
P.O. Box 230 Valrico FL 33595
Phone No.: 813.659.9197

TEXAS BOARD OF PROFESSIONAL ENGINEERS
CERTIFICATE OF REGISTRATION # F-11852

PRODUCT: EXTRUDED VINYL SLIDING PATIO DOORS

PART OR ASSEMBLY: BILL OF MATERIALS, GLAZING DETAIL & COMPONENTS

NO.	DATE	REVISIONS	BY

DATE: 3/07/13
SCALE: N.T.S.
DWG. BY: JK
CHK. BY: LFS
DRAWING NO.: TX-4268
SHEET 4 OF 4

© 2013 R.W. BUILDING CONSULTANTS INC.

R:\A - Projects\Project Folders\proj 1401-1500\PF 1457\D. RWBC Drawings\TX-2012\TX-4268-69.dwg, 1-4