THERMA TRU®

THERMA TRU DOORS

118 INDUSTRIAL DR., EDGERTON, OH 43517

"VENTED" SIDELITES w/ OPAQUE FIBERGLASS DOOR

INSWING

"NON-IMPACT"

EVALUATED FOR USE IN THE STATE OF TEXAS

The Fiberglass Door described herein complies with the 2006 International Residential Code (IRC), Sections R301 & R613 and the 2006 International Building Code (IBC), Sections 1405.12, 1609, 1714.5, 2403 and 2404 (including Texas revisions) subject to the following conditions:

1. Anchors shall be as listed and spaced as shown in the details. Anchor embedment to base material shall be beyond wall dressing or stucco.
2. When used in areas requiring wind-borne debris protection this product is required to be protected with an impact resistant covering that complies with Section R301.2.1.2 of the IRC and Section 1609.1.2 of the IBC.
3. Allowable design pressure requirements must be equal to or less than the design pressure rating shown in the design pressure chart, sheet 1 of this drawing.
4. Conditions not covered by this drawing are subject to further engineering analysis.

TABLE OF CONTENTS

SHEET#	DESCRIPTION
1	Typical elevations, design pressures & general notes
2	Door panel details
3	Sidelite panel details and glazing details
4	Elevations
5	Horizontal cross sections
6	Vertical cross sections
7	Frame anchoring
8	Hardware details
9	Hardware strike details
10	Bill of materials and components

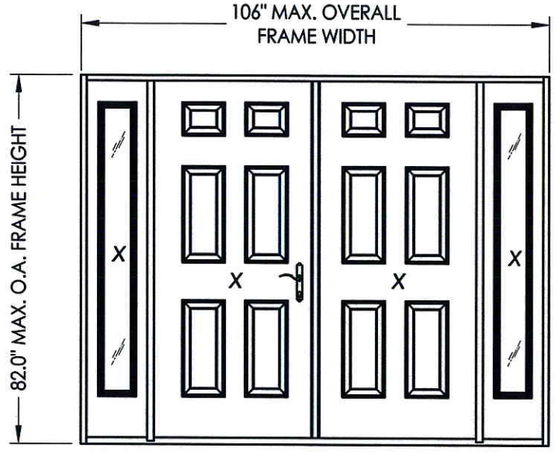

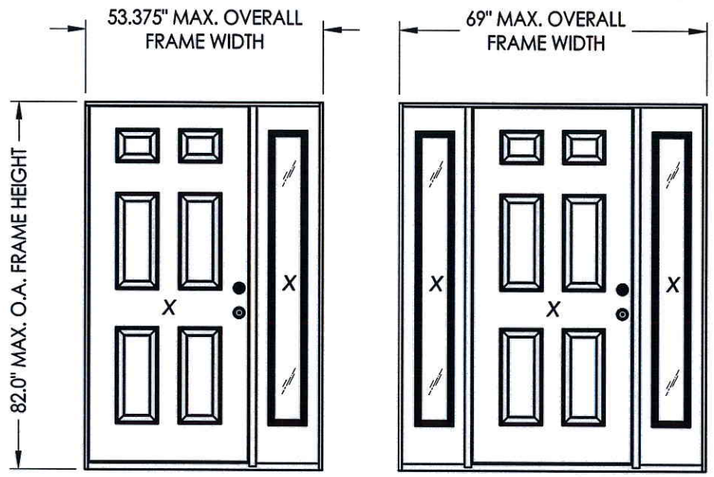

CONFIGURATION	MAX. FRAME DIMENSION	DESIGN PRESSURE (PSF) Multi-Point Door Lock		DESIGN PRESSURE (PSF) Lock & Deadbolt	
		POSITIVE	NEGATIVE	POSITIVE	NEGATIVE
XX	53.375" x 82.0"	+80.0	-80.0	+65.0	-75.0
XXX	69.0" x 82.0"	+80.0	-80.0	+65.0	-75.0
XXXX	106.0" x 82.0"	+35.0	-40.0	N/A	N/A

STATE OF TEXAS — LYNDON F. SCHMIDT — 104123 — LICENSED PROFESSIONAL ENGINEER

2.19.13

Documents Prepared By: Lyndon F. Schmidt, P.E.
TEXAS P.E. #104123

RW BUILDING CONSULTANTS, INC.
P.O. Box 230 Valrico FL. 33595
Phone No.: 813.659.9197

TEXAS BOARD OF PROFESSIONAL ENGINEERS
CERTIFICATE OF REGISTRATION # F-11852

PRODUCT: THERMA-TRU

PART OR ASSEMBLY: TYPICAL ELEVATION, DESIGN PRESSURES & GENERAL NOTES

NO.	DATE	BY

REVISIONS

DATE: 1/2/13
SCALE: N.T.S.
DWG. BY: JK
CHK. BY: LFS
DRAWING NO.: TX-4291
SHEET 1 OF 10

© 2013 R.W. BUILDING CONSULTANTS INC.

R:\A - Projects\Project Folders\Proj 1701 - 1800\PF 1702\D. RWBC Drawings\TX-4291.dwg, TX-4291

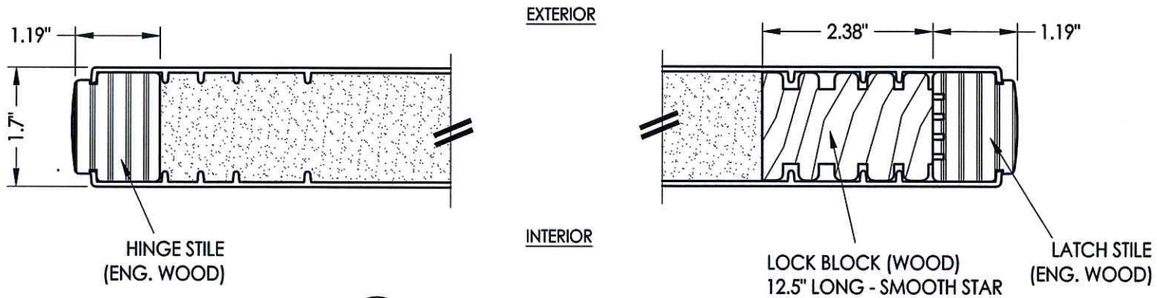

1/2 HORIZONTAL CROSS SECTION

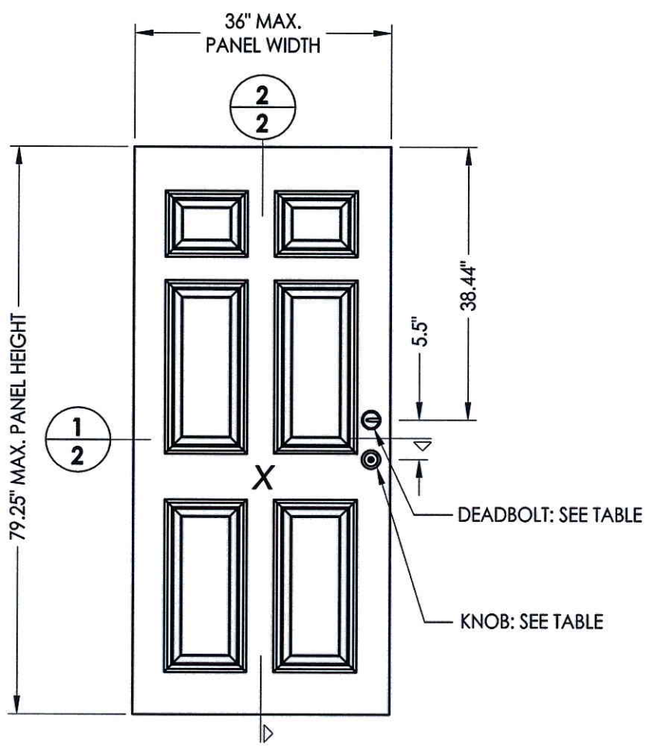

40 DOOR PANEL (SMOOTH STAR / FIBER CLASSIC)
Latch & Deadbolt

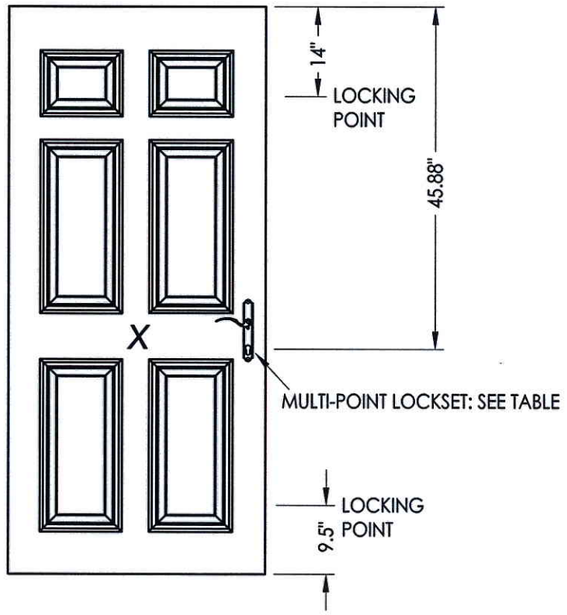

40 DOOR PANEL (SMOOTH STAR / FIBER CLASSIC)
Multi-point Lockset

HARDWARE TABLE	
MANUFACTURER	**MODEL**
KWIKSET	KNOB: SIGNATURE SERIES DEADBOLT: SIGNATURE SERIES (780)
HOPPE	MULTI-POINT: HLS 9000 SERIES

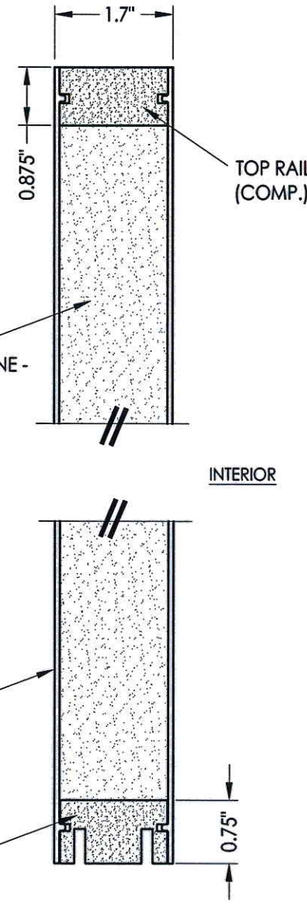

2/2 VERTICAL CROSS SECTION

Documents Prepared By: Lyndon F. Schmidt, P.E.
TEXAS P.E. #104123

RW BUILDING CONSULTANTS, INC.
P.O. Box 230 Valrico FL 33595
Phone No.: 813.659.9197

TEXAS BOARD OF PROFESSIONAL ENGINEERS
CERTIFICATE OF REGISTRATION # F-11852

STATE OF TEXAS · LYNDON F SCHMIDT · 104123 · LICENSED PROFESSIONAL ENGINEER
2.19.13

PRODUCT: THERMA-TRU

PART OR ASSEMBLY: DOOR PANEL DETAILS

NO.	DATE	REVISIONS	BY

DATE: 1/2/13
SCALE: N.T.S.
DWG. BY: JK
CHK. BY: LFS
DRAWING NO.: TX-4291
SHEET 2 OF 10

© 2013 R.W. BUILDING CONSULTANTS INC.

R:\A - Projects\Project Folders\Proj 1701 - 1800\PF 1702\D. RWBC Drawings\TX-4291.dwg, 2.1

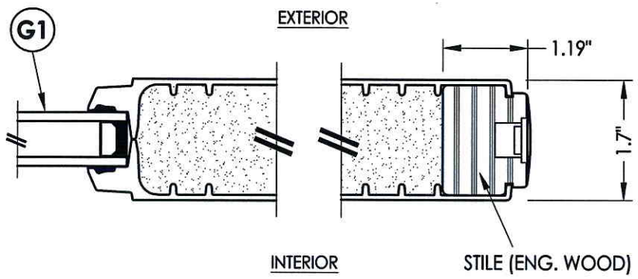

1/3 **HORIZONTAL CROSS SECTION**
Flush Glazing

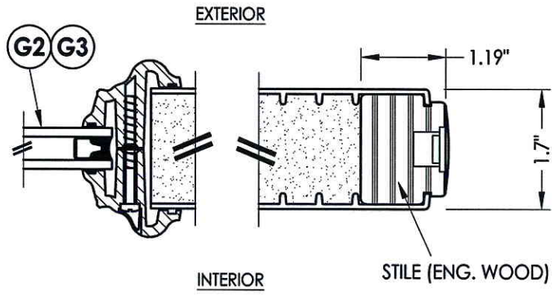

1/3 **HORIZONTAL CROSS SECTION**
Lip Lite Glazing

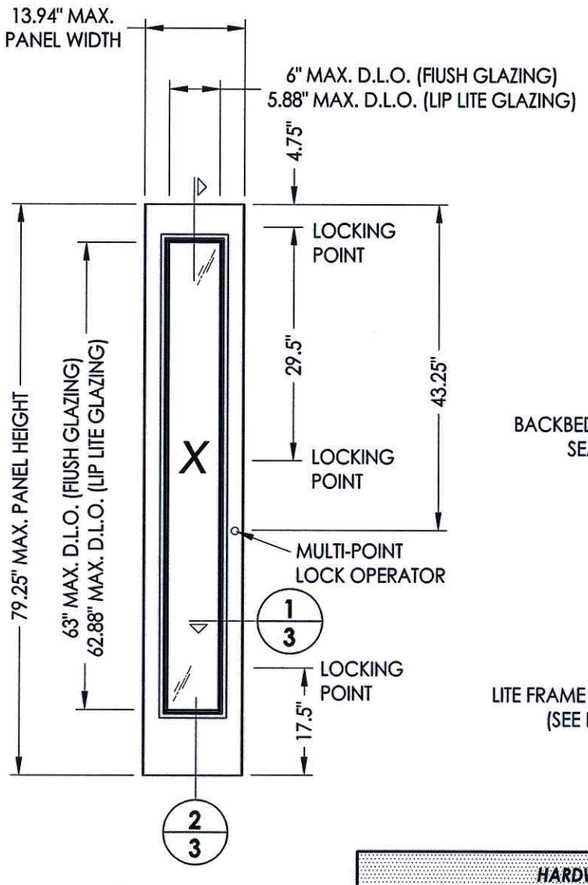

50 **SIDELITE PANEL**
VENTED

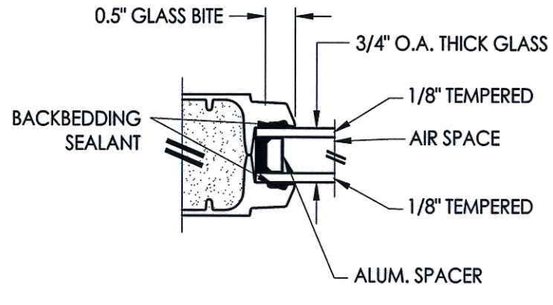

G1 **GLAZING DETAIL (3/4" IG)**
Flush Glazed

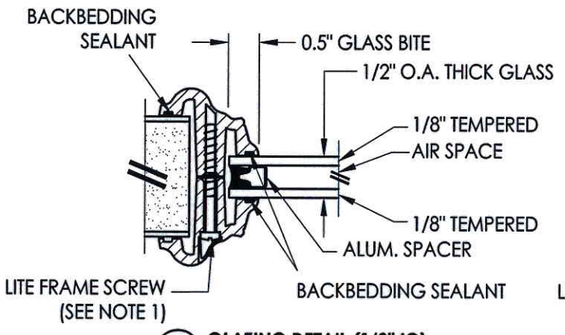

G2 **GLAZING DETAIL (1/2" IG)**
Lip Lite Frame (BTS)

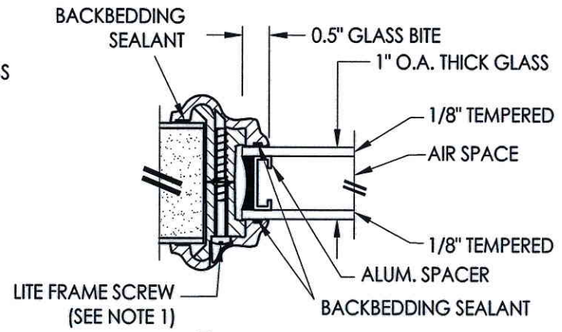

G3 **GLAZING DETAIL (1" IG)**
Lip Lite Frame (BTS)

HARDWARE TABLE	
MANUFACTURER	MODEL
HOPPE	MULTI-POINT: OSL SERIES (Sidelite)

NOTE:
1. Lite frame screws (#8 x 1-1/2" PH SMS), 14 total per sidelite, evenly spaced.

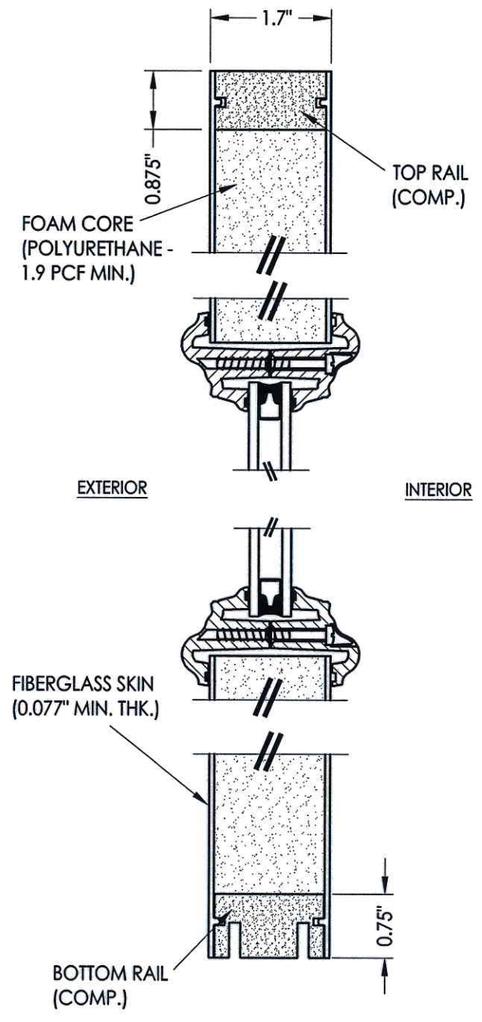

2/3 **VERTICAL CROSS SECTION**

Documents Prepared By: Lyndon F. Schmidt, P.E.
TEXAS P.E. #104123

R|W BUILDING CONSULTANTS, INC.
P.O. Box 230 Valrico FL 33595
Phone No.: 813.659.9197

TEXAS BOARD OF PROFESSIONAL ENGINEERS
CERTIFICATE OF REGISTRATION # F-11852

STATE OF TEXAS · LYNDON F. SCHMIDT · 104123 · LICENSED PROFESSIONAL ENGINEER

PRODUCT: THERMA-TRU

PART OR ASSEMBLY: SIDELITE PANEL DETAILS & GLAZING DETAILS

NO.	DATE	BY
	REVISIONS	

DATE: 1/2/13
SCALE: N.T.S.
DWG. BY: JK
CHK. BY: LFS
DRAWING NO.: TX-4291
SHEET 3 OF 10

© 2013 R.W. BUILDING CONSULTANTS INC.

R:\A - Projects\Project Folders\Proj 1701 - 1800\PF 1702\D. RWBC Drawings\TX-4291.dwg, 3.1

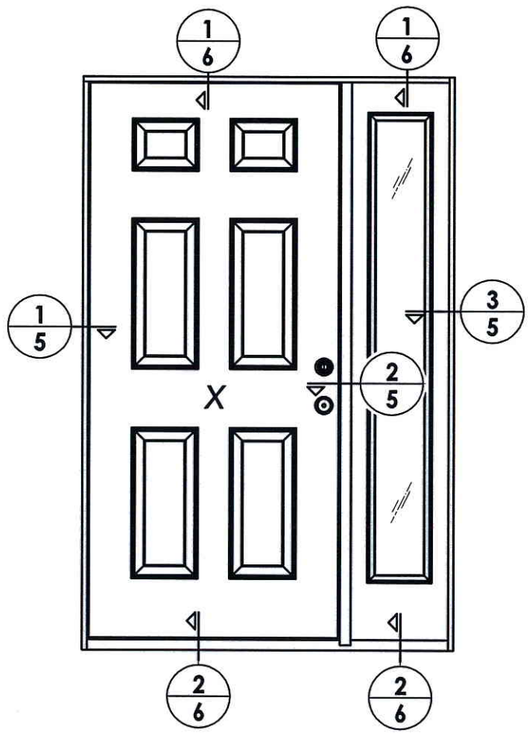

ELEVATION
XX

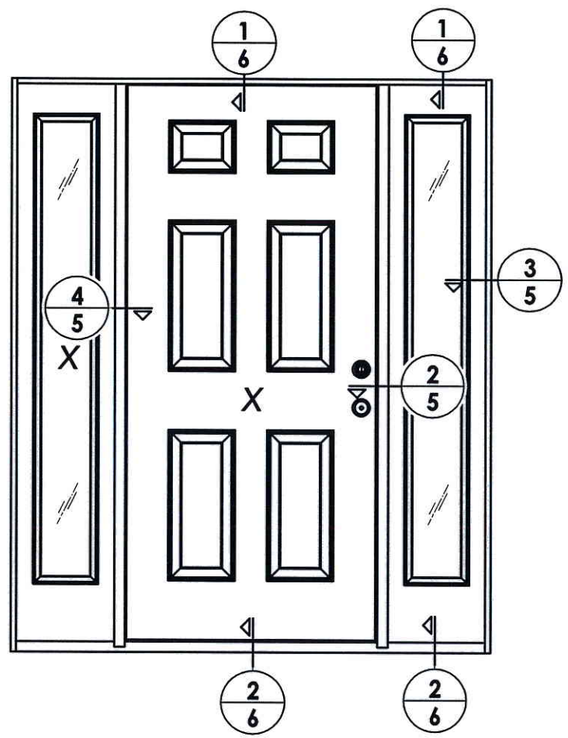

ELEVATION
XXX

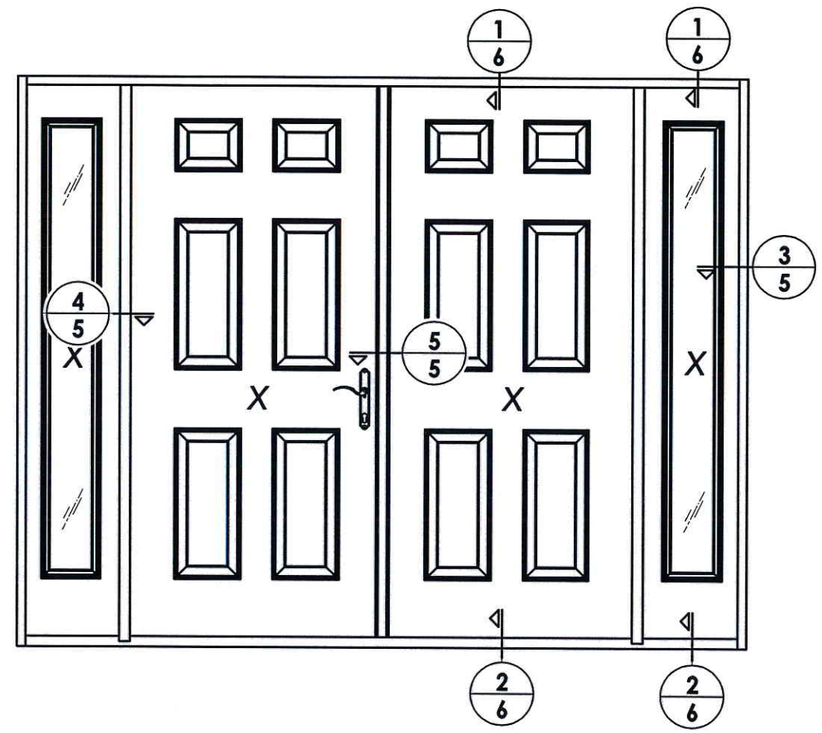

ELEVATION
XXXX

STATE OF TEXAS
LYNDON F. SCHMIDT
104123
LICENSED
PROFESSIONAL ENGINEER
2-15-13

Documents Prepared By: Lyndon F. Schmidt, P.E.
TEXAS P.E. #104123

RW BUILDING CONSULTANTS, INC.
P.O. Box 230 Valrico FL. 33595
Phone No.: 813.659.9197

TEXAS BOARD OF PROFESSIONAL ENGINEERS
CERTIFICATE OF REGISTRATION # F-11852

PRODUCT: THERMA-TRU

PART OR ASSEMBLY: ELEVATIONS

NO.	DATE	REVISIONS	BY

DATE: 1/2/13
SCALE: N.T.S.
DWG. BY: JK
CHK. BY: LFS
DRAWING NO.: TX-4291
SHEET 4 OF 10

© 2013 R.W. BUILDING CONSULTANTS INC.

R:\A - Projects\Project Folders\Proj 1701 - 1800\PF 1702\D. RWBC Drawings\TX-4291.dwg, 4.1

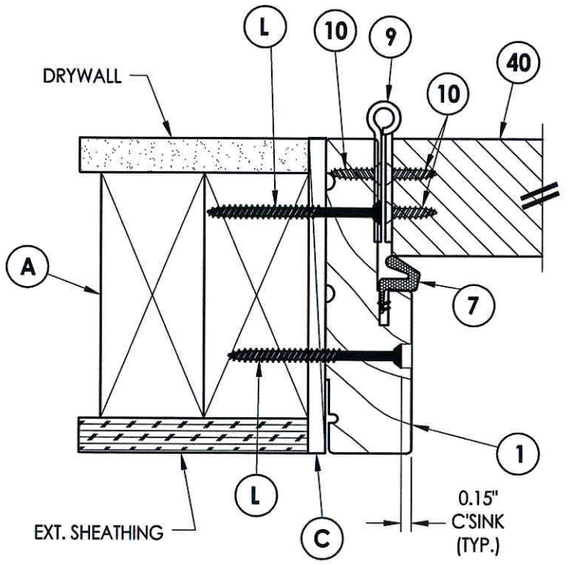

1/5 **HORIZONTAL CROSS SECTION**

INTERIOR

EXTERIOR

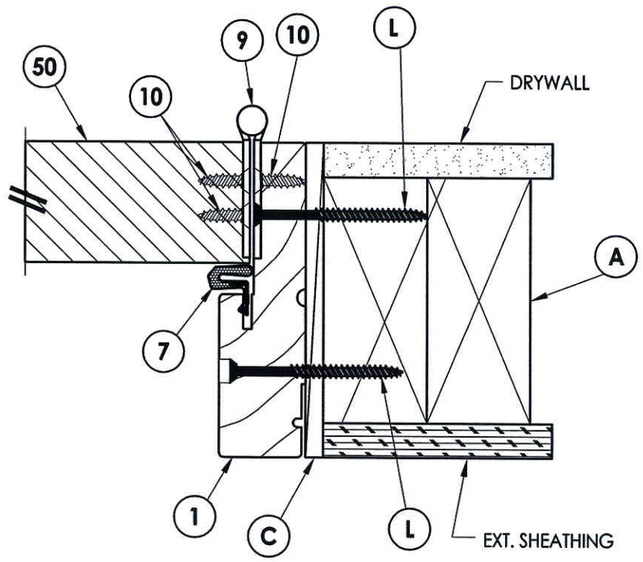

3/5 **HORIZONTAL CROSS SECTION**

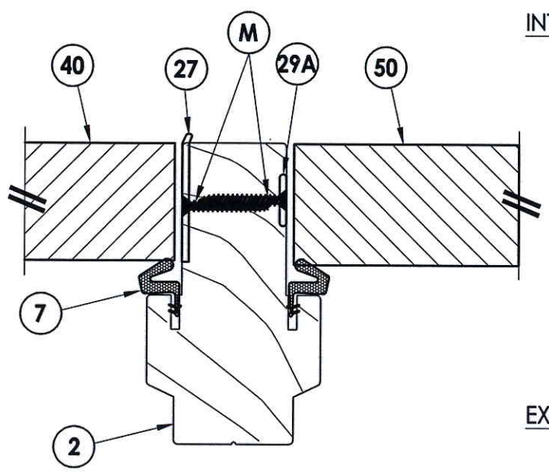

2/5 **HORIZONTAL CROSS SECTION**

INTERIOR

EXTERIOR

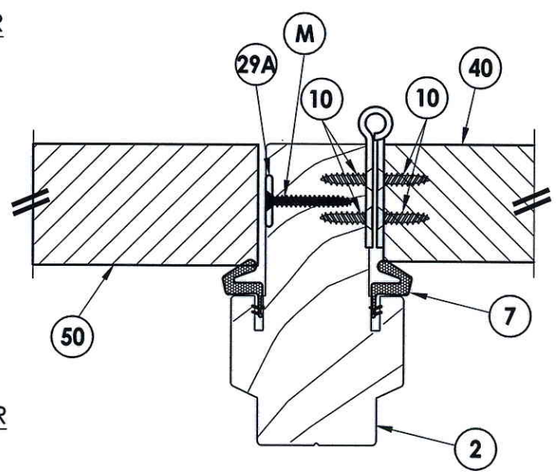

4/5 **HORIZONTAL CROSS SECTION**

INTERIOR

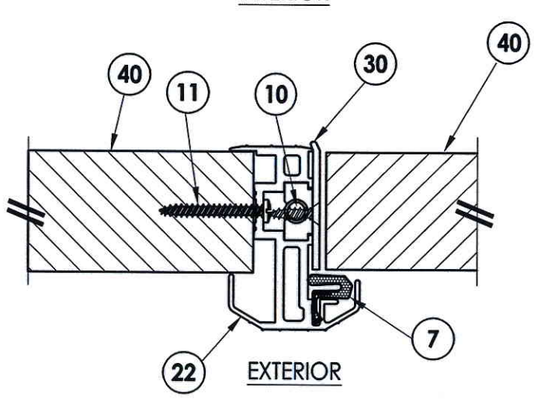

5/5 **HORIZONTAL CROSS SECTION**

STATE OF TEXAS
LYNDON F. SCHMIDT
104123
LICENSED PROFESSIONAL ENGINEER
2-19-13

Documents Prepared By: Lyndon F. Schmidt, P.E.
TEXAS P.E. #104123

RW BUILDING CONSULTANTS, INC.
P.O. Box 230 Valrico FL. 33595
Phone No.: 813.659.9197

TEXAS BOARD OF PROFESSIONAL ENGINEERS
CERTIFICATE OF REGISTRATION # F-11852

PRODUCT: THERMA-TRU

PART OR ASSEMBLY: HORIZONTAL CROSS SECTIONS

NO.	DATE	REVISIONS	BY

DATE: 1/2/13
SCALE: N.T.S.
DWG. BY: JK
CHK. BY: LFS
DRAWING NO.: TX-4291
SHEET 5 OF 10

© 2013 R.W. BUILDING CONSULTANTS INC.

R:\A - Projects\Project Folders\Proj 1701 - 1800\PF 1702\D. RWBC Drawings\TX-4291.dwg, 5.1

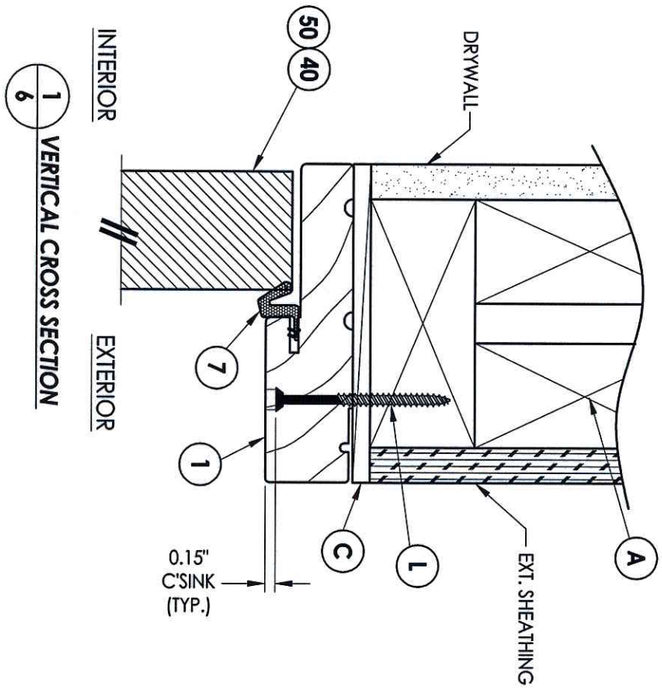

1/6 VERTICAL CROSS SECTION

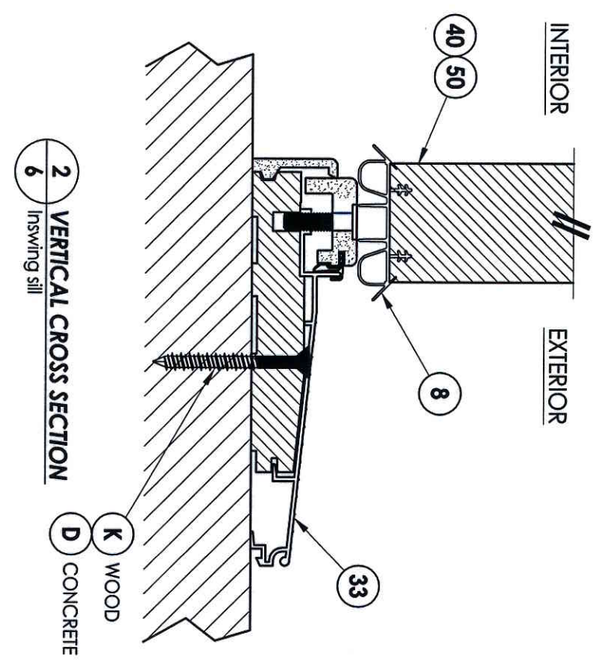

2/6 VERTICAL CROSS SECTION
Inswing sill

STATE OF TEXAS
LYNDON F. SCHMIDT
104123
LICENSED PROFESSIONAL ENGINEER
2-19-13

DATE:	1/2/13	PRODUCT:	THERMA-TRU
SCALE:	N.T.S.	PART OR ASSEMBLY:	VERTICAL CROSS SECTIONS
DWG. BY:	JK		
CHK. BY:	LFS		
DRAWING NO.:	TX-4291		
SHEET	6 OF 10		

NO.	DATE	BY
REVISIONS		

Documents Prepared By: Lyndon F. Schmidt, P.E.
TEXAS P.E. #104123

RW BUILDING CONSULTANTS, INC.
P.O. Box 230 Valrico FL. 33595
Phone No.: 813.659.9197

TEXAS BOARD OF PROFESSIONAL ENGINEERS
CERTIFICATE OF REGISTRATION # F-11852

© 2013 R.W. Building Consultants Inc.

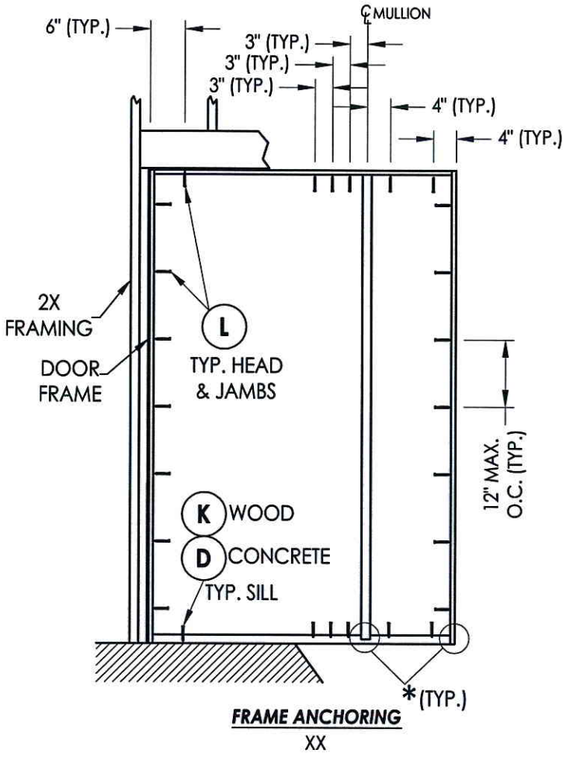

FRAME ANCHORING
XX

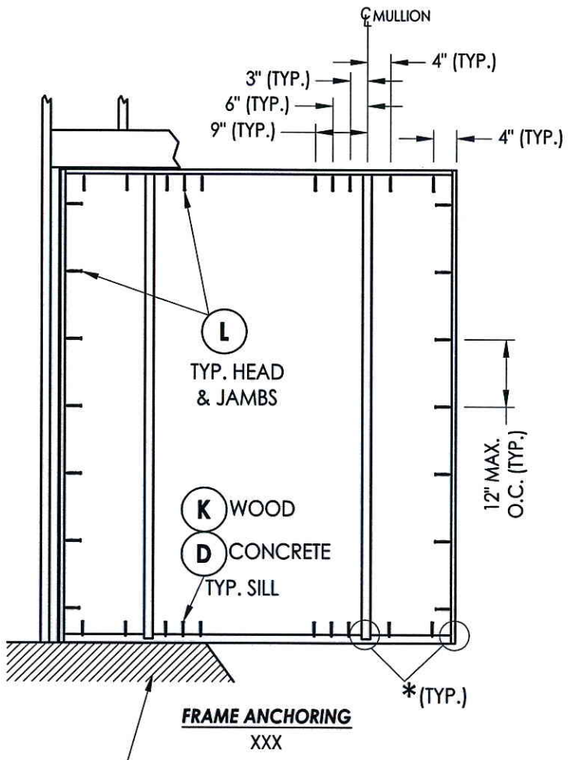

FRAME ANCHORING
XXX

FLOOR SUBSTRATE MATERIAL (TYP.)
CONCRETE (MIN. 3000 PSI)
WOOD (S.G. >= 0.42)

* The frame jambs and vertical mullions are secured to the head and sill with (3) #8 x 2-1/2" wood screws each.

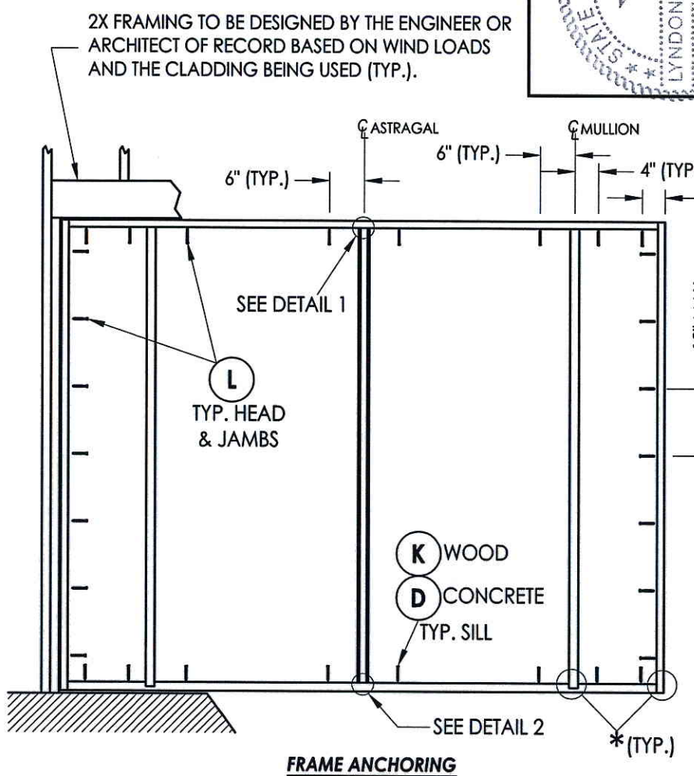

FRAME ANCHORING
XXXX

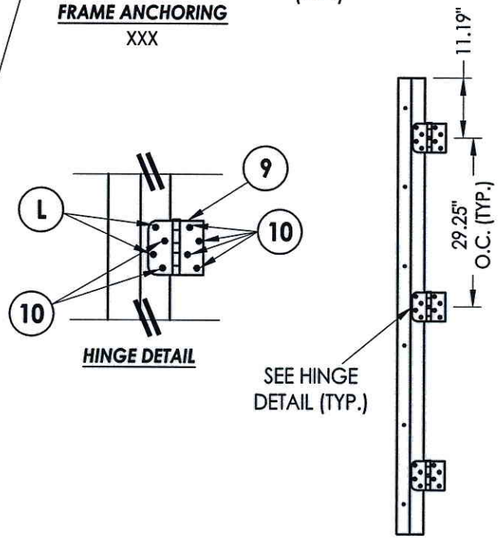

HINGE JAMB

HINGE DETAIL

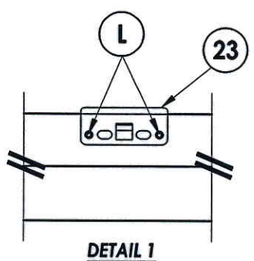

DETAIL 1
Astragal & Shootbolt Strike plate @ head (Multi-point Lockset)

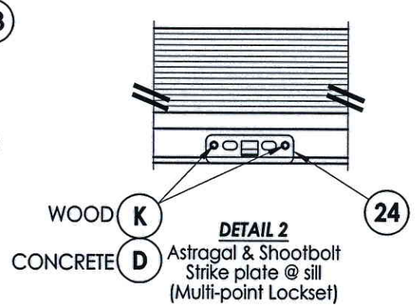

DETAIL 2
Astragal & Shootbolt Strike plate @ sill (Multi-point Lockset)

CONCRETE ANCHOR NOTES:

1. *Concrete anchor locations at the corners may be adjusted to maintain the min. edge distance to mortar joints.*
2. *Concrete anchor locations noted as "MAX. ON CENTER" must be adjusted to maintain the min. edge distance to mortar joints, additional concrete anchors may be required to ensure the "MAX. ON CENTER" dimension are not exceeded.*
3. *Concrete anchor table:*

ANCHOR TYPE	ANCHOR SIZE	MIN. EMBEDMENT	MIN. CLEARANCE TO MASONRY EDGE	MIN. CLEARANCE TO ADJACENT ANCHOR
ITW TAPCON®	1/4"	1-3/4"	2-1/2"	3"
ELCO ULTRACON®	1/4"	1-3/4"	1"	3"

STATE OF TEXAS
LYNDON F. SCHMIDT
104123
LICENSED PROFESSIONAL ENGINEER
2.19.13

Documents Prepared By: Lyndon F. Schmidt, P.E.
TEXAS P.E. #104123

RW BUILDING CONSULTANTS, INC.
P.O. Box 230 Valrico FL 33595
Phone No.: 813.659.9197

TEXAS BOARD OF PROFESSIONAL ENGINEERS
CERTIFICATE OF REGISTRATION # F-11852

PRODUCT: *THERMA-TRU*

PART OR ASSEMBLY: *FRAME ANCHORING*

NO.	DATE	BY

REVISIONS

DATE: 1/2/13
SCALE: N.T.S.
DWG. BY: JK
CHK. BY: LFS
DRAWING NO.: TX-4291
SHEET 7 OF 10

© 2013 R.W. BUILDING CONSULTANTS INC.

R:\A - Projects\Project Folders\Proj 1701 - 1800\PF 1702\D. RWBC Drawings\TX-4291.dwg, 7.1

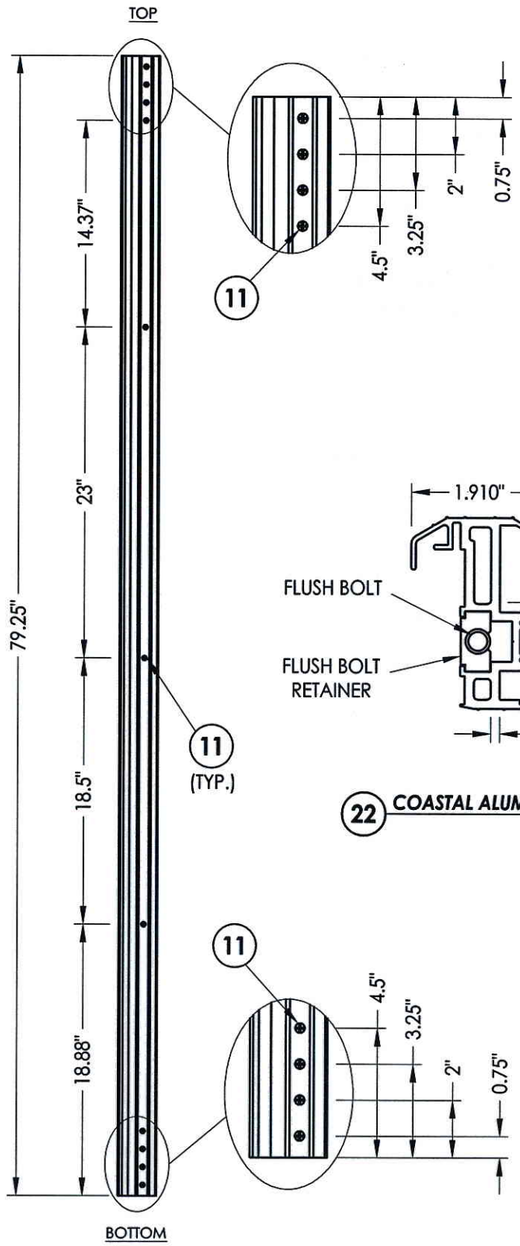

ASTRAGAL DETAILS

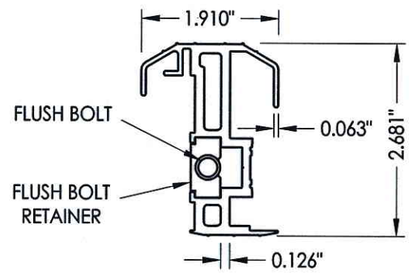

22 COASTAL ALUMINUM ASTRAGAL

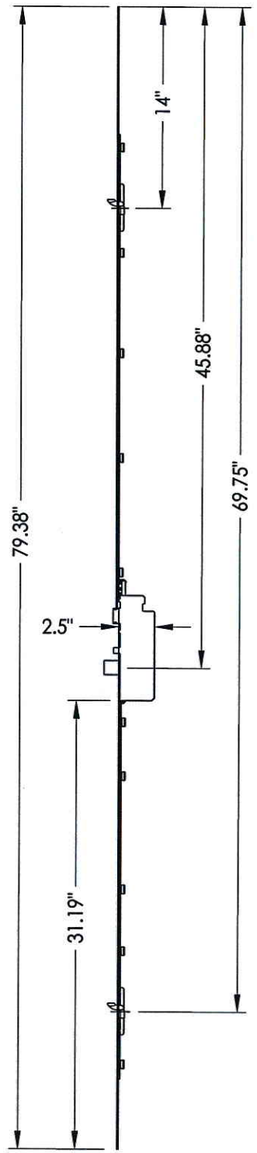

HOPPE MULTI-POINT LOCK
Manual Raised Tongue
Gear System
(Single Door)

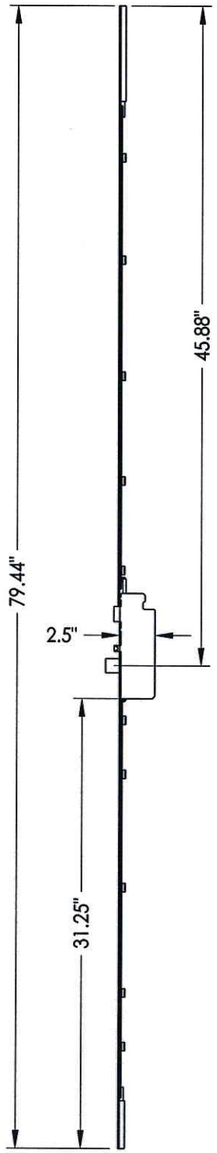

HOPPE MULTI-POINT LOCK
Manual Shootbolt System
(Double Door)

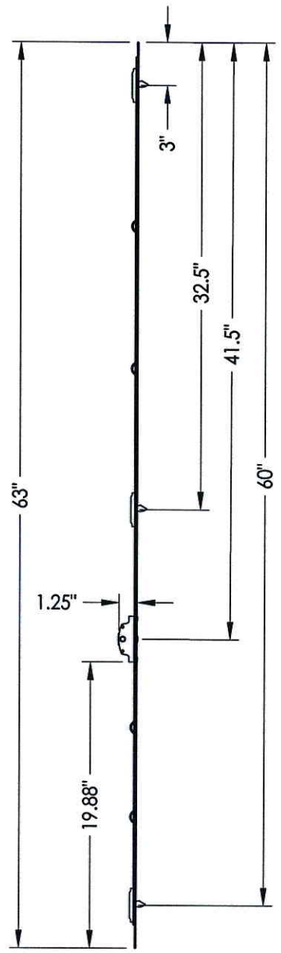

HOPPE MULTI-POINT LOCK
Manual Raised Tongue
Gear System
(Sidelite)

HOPPE MULTI-POINT LOCK SYSTEMS

Documents Prepared By: Lyndon F. Schmidt, P.E.
TEXAS P.E. #104123

R|W BUILDING CONSULTANTS, INC.
P.O. Box 230 Valrico FL. 33595
Phone No.: 813.659.9197

TEXAS BOARD OF PROFESSIONAL ENGINEERS
CERTIFICATE OF REGISTRATION # F-11852

PRODUCT: THERMA TRU

PART OR ASSEMBLY: HARDWARE DETAILS

NO.	DATE	BY
REVISIONS		

DATE: 1/2/13
SCALE: N.T.S.
DWG. BY: JK
CHK. BY: LFS
DRAWING NO.: TX-4291
SHEET 8 OF 10

© 2013 R.W. BUILDING CONSULTANTS INC.

R:\A - Projects\Project Folders\Proj 1701 - 1800\PF 1702\D. RWBC Drawings\TX-4291.dwg, 8.1

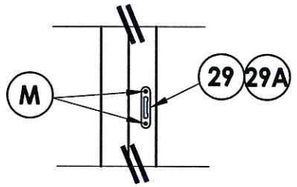

TONGUE STRIKE DETAIL
Single Door/Sidelite

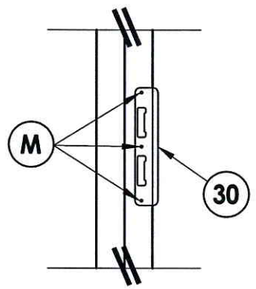

LATCH & DEADBOLT DETAIL
Single Door

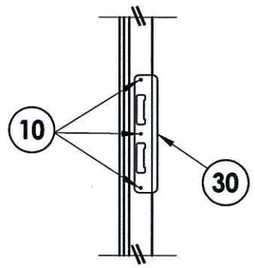

LATCH & DEADBOLT DETAIL
Double Door

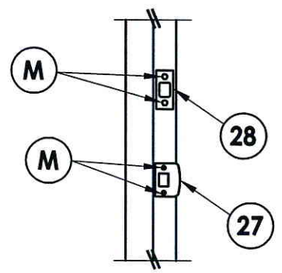

LATCH & DEADBOLT DETAIL
Single Door

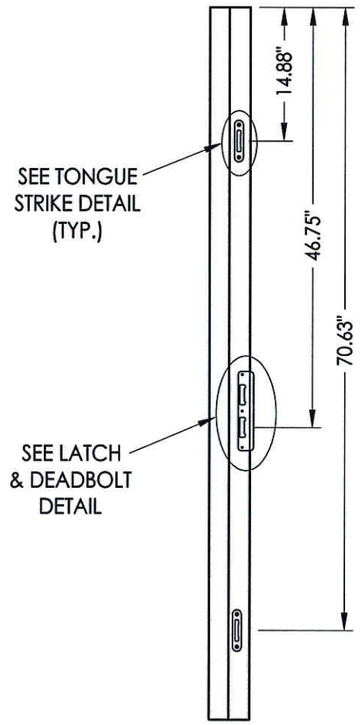

STRIKE JAMB / MULLION
Single Door

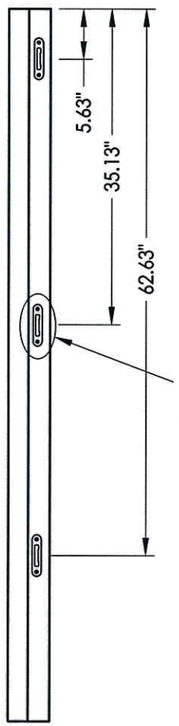

STRIKE MULLION
Sidelite

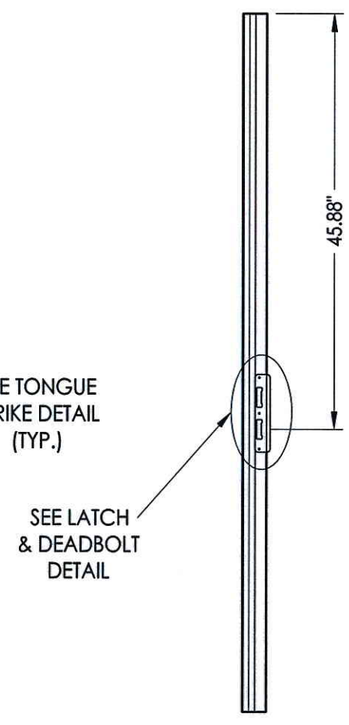

ASTRAGAL STRIKE
Double Door

MULTI-POINT LOCK STRIKE DETAILS

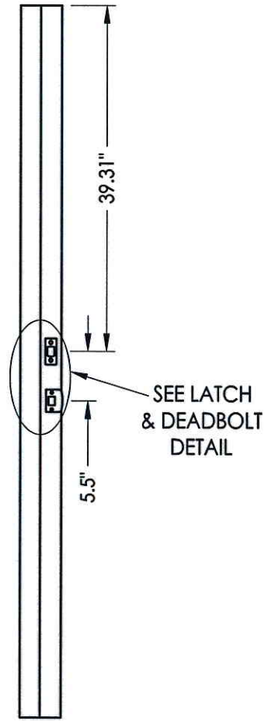

STRIKE JAMB / MULLION
Single Door

LATCH & DEADBOLT STRIKE DETAILS

Documents Prepared By: Lyndon F. Schmidt, P.E.
TEXAS P.E. #104123

RW BUILDING CONSULTANTS, INC.
P.O. Box 230 Valrico FL. 33595
Phone No.: 813.659.9197

TEXAS BOARD OF PROFESSIONAL ENGINEERS
CERTIFICATE OF REGISTRATION # F-11852

STATE OF TEXAS · LYNDON F. SCHMIDT · 104123 · LICENSED PROFESSIONAL ENGINEER

2.19.13

PRODUCT: *THERMA-TRU*

PART OR ASSEMBLY: *HARDWARE STRIKE DETAILS*

NO.	DATE	BY

REVISIONS

DATE: 1/2/13
SCALE: N.T.S.
DWG. BY: JK
CHK. BY: LFS
DRAWING NO.: TX-4291
SHEET 9 OF 10

© 2013 R.W. BUILDING CONSULTANTS INC.

R:\A - Projects\Project Folders\Proj 1701 - 1800\PF 1702\D. RWBC Drawings\TX-4291.dwg, 9.1

BILL OF MATERIALS		
ITEM #	DESCRIPTION	MATERIAL
A	2X FRAMING (G >= 0.42)	WOOD
C	1/4" MAX. SHIM SPACE	-
D	1/4" ELCO OR ITW CONCRETE SCREW (1-3/4" MIN. EMBEDMENT)	STEEL
K	#12 X 3" PFH WOOD SCREW (1-1/2" MIN. EMBEDMENT)	STEEL
L	#10 X 2-1/2" PFH WOOD SCREW (1.15" MIN. EMBEDMENT)	STEEL
M	#8 X 1-1/4" PFH WOOD SCREW	STEEL
1	HEAD AND SIDE JAMB (FINGER-JONTED PINE) (G >= 0.42)	WOOD
2	INTEGRAL MULLION (FINGER-JONTED PINE) (G >= 0.42)	WOOD
7	WEATHER-STRIP (THERMA-TRU)	FOAM
8	DOOR BOTTOM SWEEP	PVC
9	4" X 4" HINGE	STEEL
10	#10 X 3/4" PFH WOOD SCREW	STEEL
11	#10 X 1-3/4" PFH WOOD SCREW	STEEL
22	COASTAL ALUMINUM ASTRAGAL	ALUM
23	ASTRAGAL & SHOOTBOLT STRIKE PLATE (AT HEAD)	STEEL
24	ASTRAGAL & SHOOTBOLT STRIKE PLATE (AT SILL)	STEEL
27	LATCH STRIKE PLATE (STANDARD)	STEEL
28	DEADBOLT PLATE (STANDARD)	STEEL
29	TONGUE STRIKE PLATE (DOOR TONGUE SYSTEM)	STEEL
29A	TONGUE STRIKE PLATE (SIDELITE TONGUE SYSTEM)	STEEL
30	LATCH & DEADBOLT STRIKE PLATE (TONGUE SYSTEM)	STEEL
33	INSWING THRESHOLD	ALUM/COMP
40	FIBERGLASS DOOR PANEL - SMOOTH STAR/ FIBER CLASSIC	-
50	FIBERGLASS SIDELITE PANEL - SMOOTH STAR/ FIBER CLASSIC	-

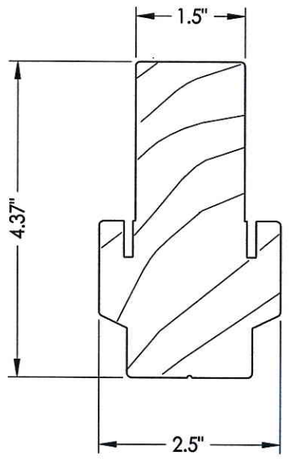

2 INTEGRAL MULLION

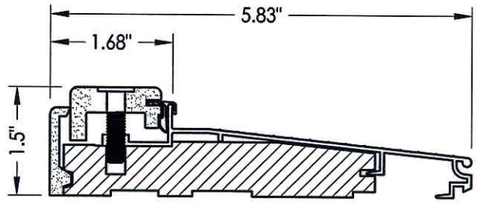

33 INSWING THRESHOLD

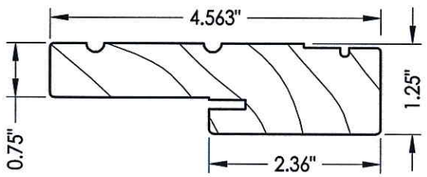

1 HEAD & JAMB

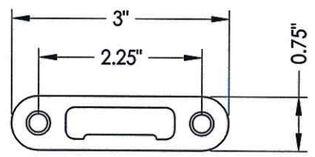

29A TONGUE STRIKE PLATE
Sidelite Tongue system

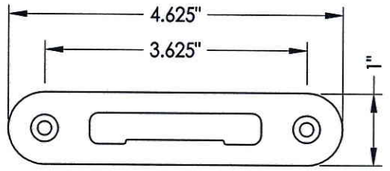

29 TONGUE STRIKE PLATE
Door Tongue system

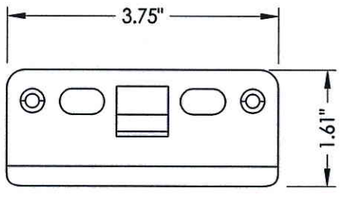

23 ASTRAGAL & SHOOTBOLT
Strike plate @ head

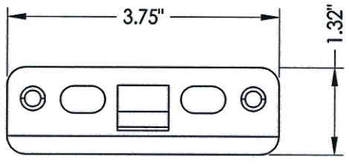

24 ASTRAGAL & SHOOTBOLT
Strike plate @ sill

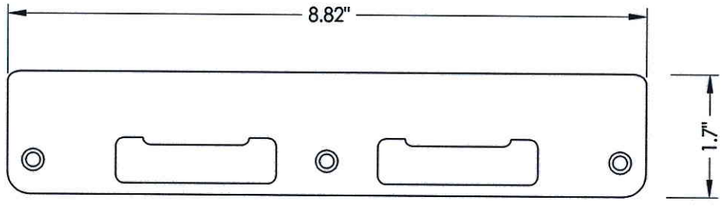

30 LATCH & DEADBOLT STRIKE PLATE
Tongue system

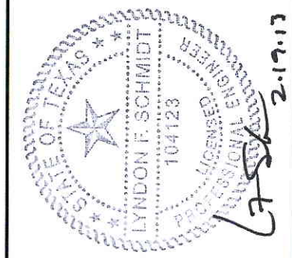

2-19-13

Documents Prepared By: Lyndon F. Schmidt, P.E.
TEXAS P.E. #104123

RW BUILDING CONSULTANTS, INC.
P.O. Box 230 Valrico FL 33595
Phone No.: 813.659.9197

TEXAS BOARD OF PROFESSIONAL ENGINEERS
CERTIFICATE OF REGISTRATION # F-11852

PRODUCT: THERMA-TRU

PART OR ASSEMBLY: BILL OF MATERIAL & COMPONENTS

NO.	DATE	REVISIONS	BY

DATE: 1/2/13
SCALE: N.T.S.
DWG. BY: JK
CHK. BY: LFS
DRAWING NO.: TX-4291
SHEET 10 OF 10

© 2013 R.W. BUILDING CONSULTANTS INC.

R:\A - Projects\Project Folders\Proj 1701 - 1800\PF 1702\D. RWBC Drawings\TX-4291.dwg, 10.1