plastpro

5200 W. CENTURY BLVD.
LOS ANGELES, CA 90045

Rustic/Mahogany/Woodgrain/Smooth Skin Series Fiberglass Single Door w/ & w/out Sidelite(s)

INSWING / OUTSWING "NON-IMPACT"

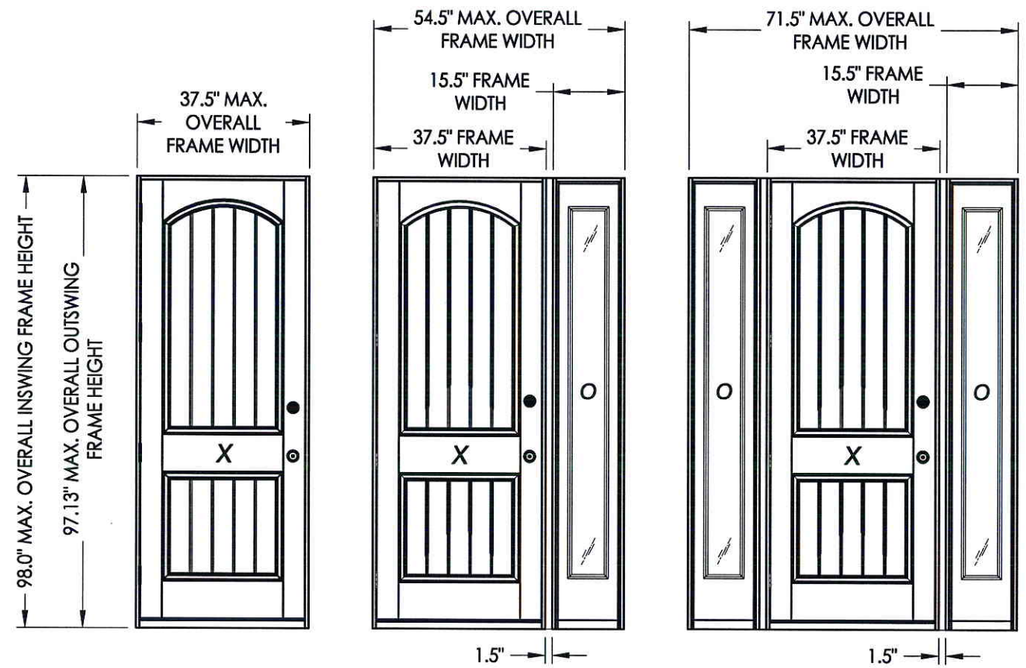

EVALUATED FOR USE IN THE STATE OF TEXAS

The Plastpro Fiberglass Door described herein complies with the 2006 International Residential Code (IRC), Sections R301 & R613 and the 2006 International Building Code (IBC), Sections 1405.12, 1609, 1714.5, 2403 and 2404 (including Texas revisions) subject to the following conditions:

1. Anchors shall be as listed and spaced as shown in the details. Anchor embedment to base material shall be beyond wall dressing or stucco.
2. When used in areas requiring wind-borne debris protection this product is required to be protected with an impact resistant covering that complies with Section R301.2.1.2 of the IRC and Section 1609.1.2 of the IBC.
3. Allowable design pressure requirements must be equal to or less than the design pressure rating shown in the design pressure chart, sheet 1 of this drawing.
4. Conditions not covered by this drawing are subject to further engineering analysis.

TABLE OF CONTENTS

SHEET#	DESCRIPTION
1	Typical elevations, design pressures & general notes
2	Door panel details
3	Door panel details
4	Sidelite panel details
5	Glazing details
6	Elevations
7	Horizontal cross sections
8	Vertical cross sections
9	Vertical cross sections
10	Frame anchoring
11	Frame anchoring
12	Bill of materials and components

CONFIGURATION	MAX. FRAME DIMENSION	MAX. SIDELITE D.L.O. DIMENSION	DESIGN PRESSURE (PSF) INSWING		DESIGN PRESSURE (PSF) OUTSWING	
			POSITIVE	NEGATIVE	POSITIVE	NEGATIVE
X	37.5" x 98.0"	N / A	+60.0	-65.0	+60.0	-60.0
XO/OX	54.5" x 98.0"	6.75" X 78.75"	+55.0	-60.0	+55.0	-55.0
OXO	71.5" x 98.0"	6.75" X 78.75"	+55.0	-60.0	+55.0	-55.0

STATE OF TEXAS
LYNDON F. SCHMIDT
104123
PROFESSIONAL ENGINEER

Documents Prepared By: Lyndon F. Schmidt, P.E.
TEXAS P.E. #104123

RW BUILDING CONSULTANTS, INC.
P.O. Box 230 Valrico FL. 33595
Phone No.: 813.659.9197

TEXAS BOARD OF PROFESSIONAL ENGINEERS
CERTIFICATE OF REGISTRATION # F-11852

PRODUCT: PLASTPRO FIBERGLASS DOOR

PART OR ASSEMBLY: TYPICAL ELEVATION, DESIGN PRESSURES & GENERAL NOTES

NO.	DATE	BY	REVISIONS

DATE: 11/29/12
SCALE: N.T.S.
DWG. BY: JK
CHK. BY: LFS
DRAWING NO.: TX-4285
SHEET 1 OF 12

© 2012 R.W. BUILDING CONSULTANTS INC.

R:\A - Projects\Project Folders\Proj 1601 - 1700\PF 1662\D. RWBC Drawings\TX-4283-86.dwg, TX-4285

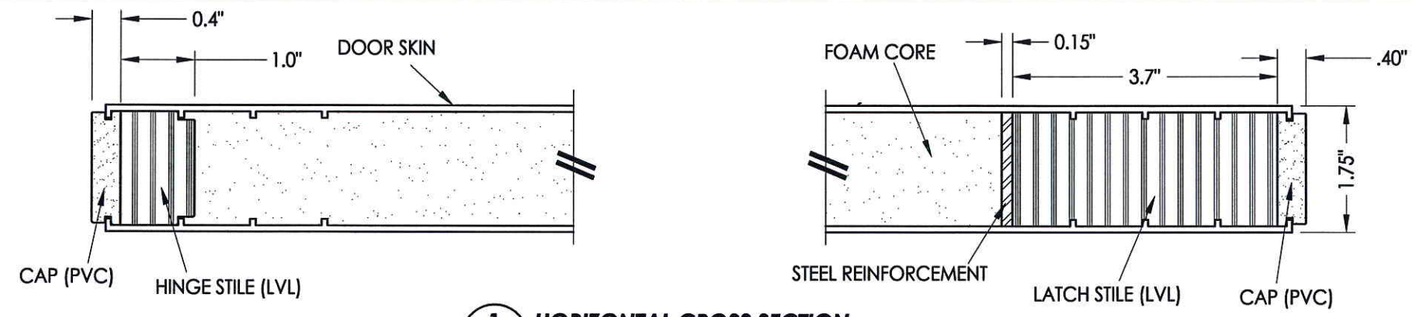

1/2 **HORIZONTAL CROSS SECTION**

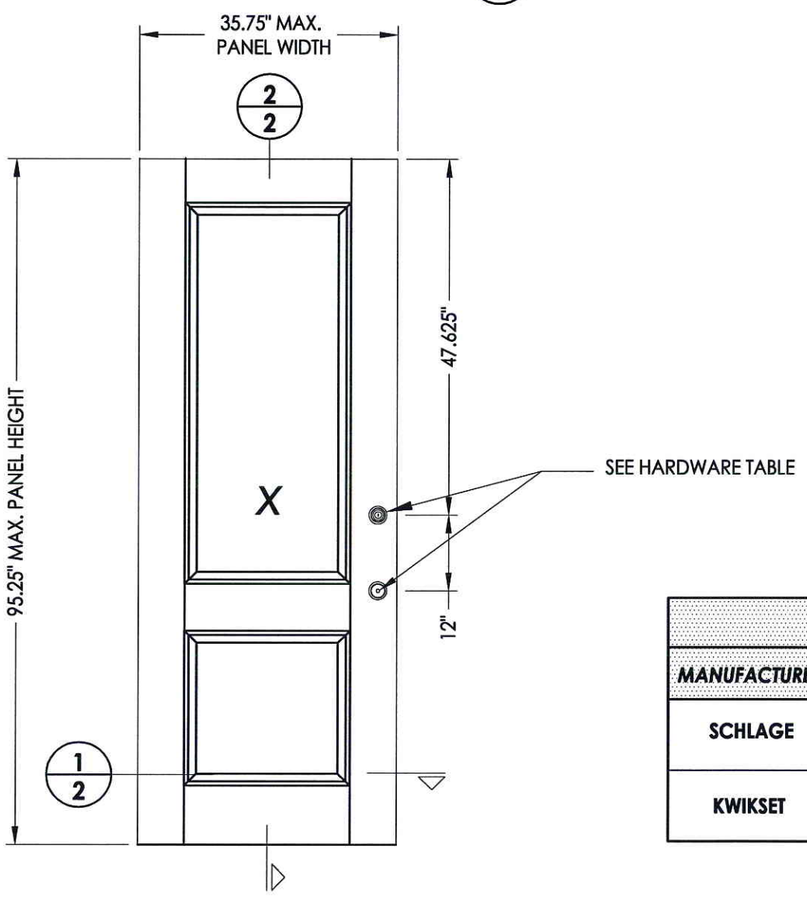

40 **DOOR PANEL**
Woodgrain / Smooth Skin Series

HARDWARE TABLE	
MANUFACTURER	MODEL
SCHLAGE	KNOB: "F" SERIES DEADBOLT: "B" SERIES
KWIKSET	KNOB: SIGNATURE SERIES DEADBOLT: SIGNATURE SERIES (780)

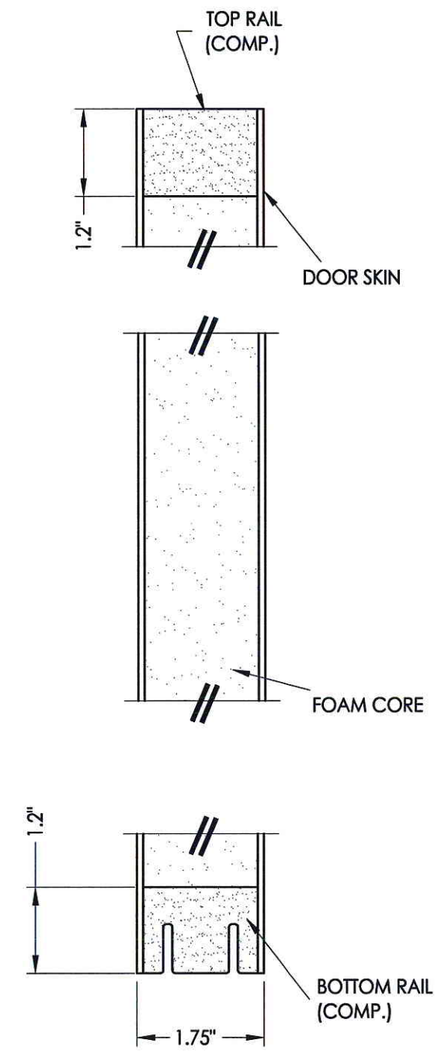

2/2 **VERTICAL CROSS SECTION**

FIBERGLASS DOOR SKIN: MIN. 0.086" THK.
CORE MATERIAL: POLYURETHANE FOAM (1.9 PCF MIN.)

STATE OF TEXAS
LYNDON F. SCHMIDT
104123
LICENSED
PROFESSIONAL ENGINEER
12.5.12

Documents Prepared By: Lyndon F. Schmidt, P.E.
TEXAS P.E. #104123

RW BUILDING CONSULTANTS, INC.
P.O. Box 230 Valrico FL. 33595
Phone No.: 813.659.9197

TEXAS BOARD OF PROFESSIONAL ENGINEERS
CERTIFICATE OF REGISTRATION # F-11852

PRODUCT: PLASTPRO INC. FIBERGLASS DOOR

PART OR ASSEMBLY: DOOR PANEL DETAILS

NO.	DATE	REVISIONS	BY

DATE: 11/29/12
SCALE: N.T.S.
DWG. BY: JK
CHK. BY: LFS
DRAWING NO.: TX-4285
SHEET 2 OF 12

© 2012 R.W. BUILDING CONSULTANTS INC.

R:\A - Projects\Project Folders\Proj 1601 - 1700\PF 1662\D. RWBC Drawings\TX-4283-85.dwg, 2.3 (2)

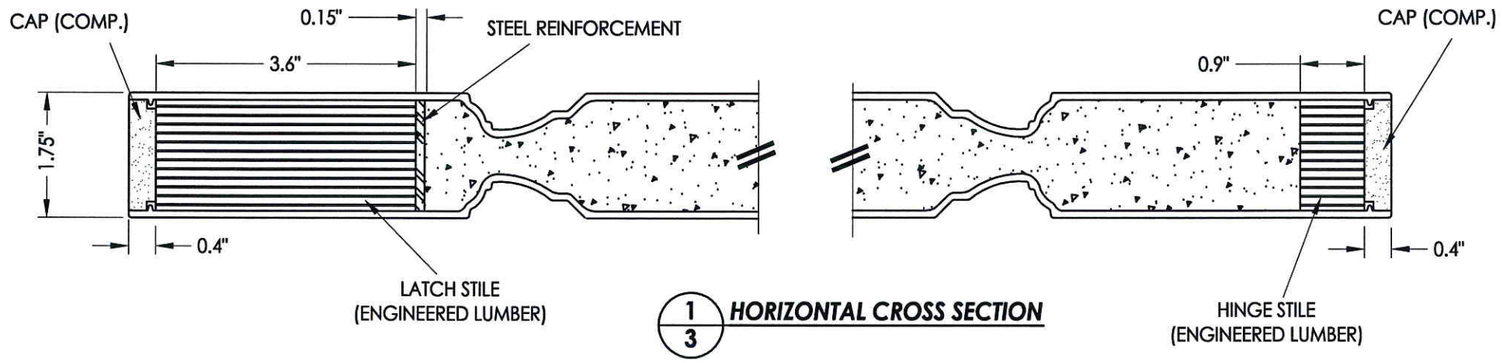

1/3 **HORIZONTAL CROSS SECTION**

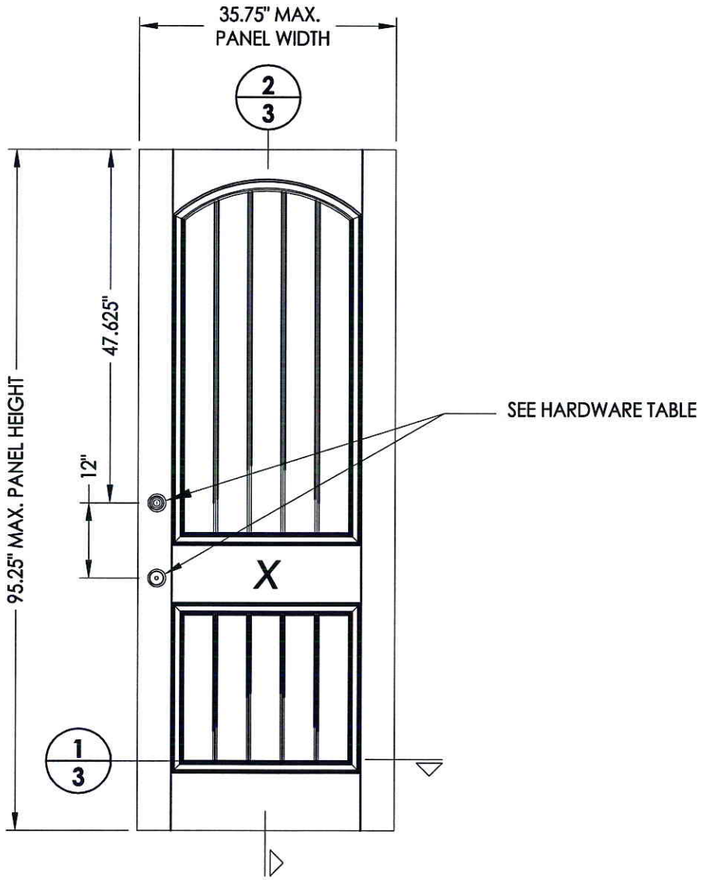

41 **DOOR PANEL**
Rustic / Mahogany Series

HARDWARE TABLE	
MANUFACTURER	**MODEL**
SCHLAGE	KNOB: "F" SERIES DEADBOLT: "B" SERIES
KWIKSET	KNOB: SIGNATURE SERIES DEADBOLT: SIGNATURE SERIES (780)

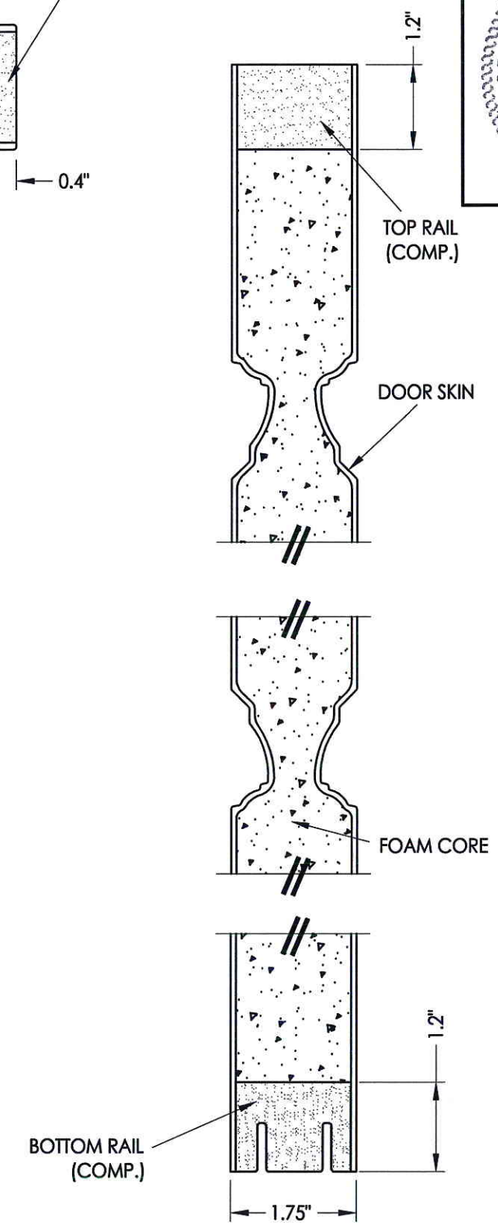

2/3 **VERTICAL CROSS SECTION**

FIBERGLASS DOOR SKIN: MIN. 0.100" THK.
CORE MATERIAL: POLYURETHANE FOAM (1.9 PCF MIN.)

STATE OF TEXAS
LYNDON F. SCHMIDT
104123
LICENSED PROFESSIONAL ENGINEER

Documents Prepared By: Lyndon F. Schmidt, P.E.
TEXAS P.E. #104123
RW BUILDING CONSULTANTS, INC.
P.O. Box 230 Valrico FL. 33595
Phone No.: 813.659.9197
TEXAS BOARD OF PROFESSIONAL ENGINEERS
CERTIFICATE OF REGISTRATION # F-11852

PRODUCT: PLASTPRO FIBERGLASS INC. DOOR
PART OR ASSEMBLY: DOOR PANEL DETAILS

REVISIONS

NO.	DATE	BY

DATE: 11/29/12
SCALE: N.T.S.
DWG. BY: JK
CHK. BY: LFS
DRAWING NO.: TX-4285
SHEET 3 OF 12

© 2012 R.W. BUILDING CONSULTANTS INC.

R:\A - Projects\Project Folders\Proj 1601 - 1700\PF 1662\D. RWBC Drawings\TX-4283-86.dwg, 2.3

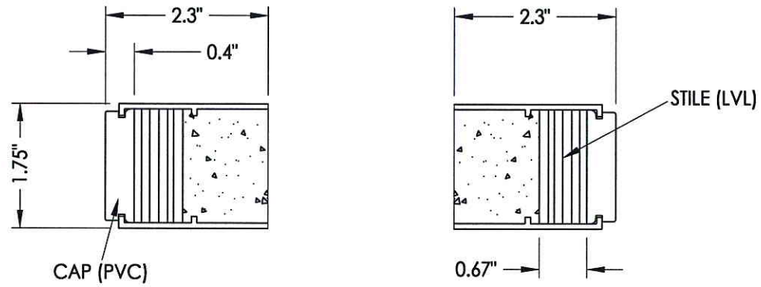

1/4 **HORIZONTAL CROSS SECTION**

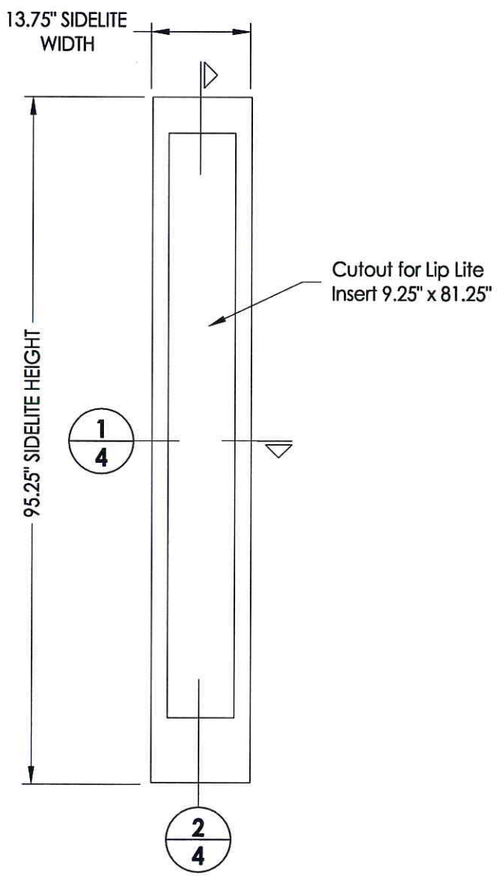

50 **SIDELITE PANEL**
Plastpro
Fiberglass

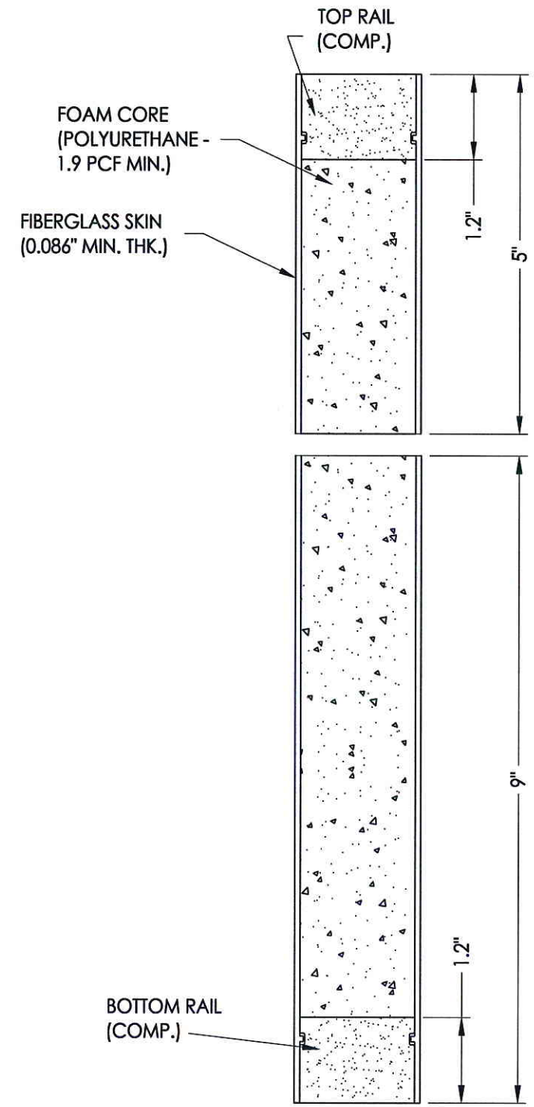

2/4 **VERTICAL CROSS SECTION**

STATE OF TEXAS
LYNDON F. SCHMIDT
104123
LICENSED PROFESSIONAL ENGINEER

Documents Prepared By: Lyndon F. Schmidt, P.E.
TEXAS P.E. #104123

RW BUILDING CONSULTANTS, INC.
P.O. Box 230 Valrico FL. 33595
Phone No.: 813.659.9197

TEXAS BOARD OF PROFESSIONAL ENGINEERS
CERTIFICATE OF REGISTRATION # F-11852

PRODUCT: PLASTPRO INC. FIBERGLASS DOOR

PART OR ASSEMBLY: SIDELITE PANEL DETAILS

NO.	DATE	BY

REVISIONS

DATE: 11/29/12
SCALE: N.T.S.
DWG. BY: JK
CHK. BY: LFS
DRAWING NO.: TX-4285
SHEET 4 OF 12

© 2012 R.W. BUILDING CONSULTANTS INC.

R:\A - Projects\Project Folders\Proj 1601 - 1700\PF 1662\D. RWBC Drawings\TX-4283-86.dwg, 3.3

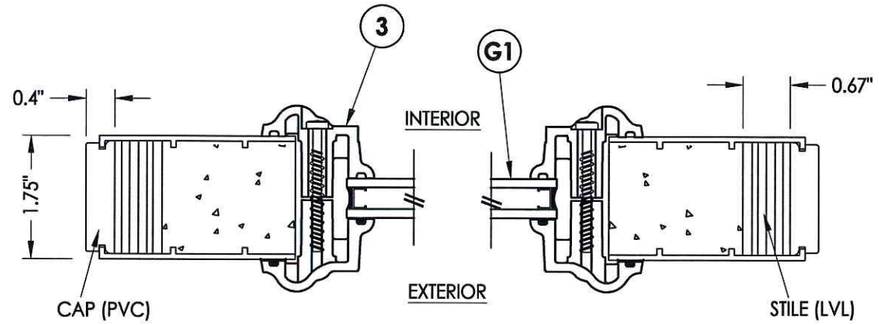

1/5 **HORIZONTAL CROSS SECTION**

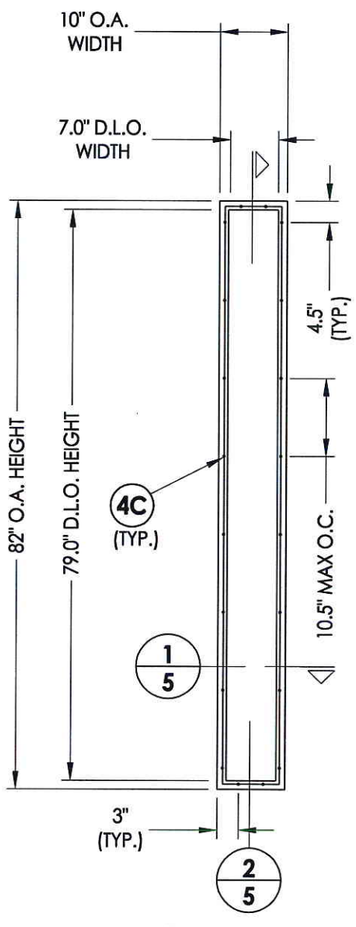

60 **ODL LITE FRAME**
NON-IMPACT
HP POLYPROPYLENE

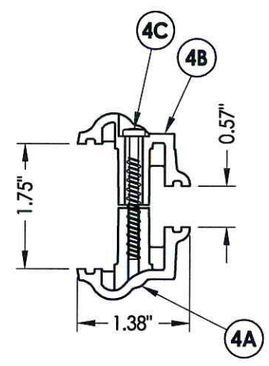

ODL LITE FRAME CROSS SECTION

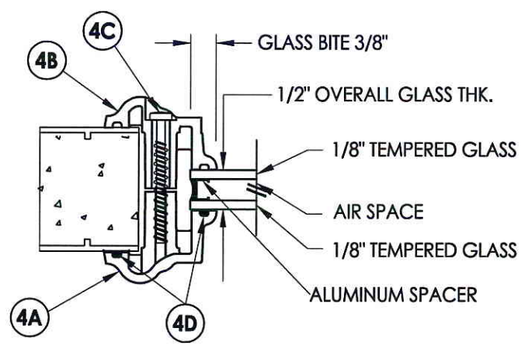

G1 **GLAZING DETAIL**

BILL OF MATERIALS		
ITEM #	DESCRIPTION	MATERIAL
4A	EXTERIOR FRAME	ALUM.
4B	INTERIOR FRAME	ALUM.
4C	#8 X 1-1/2" PPH SMS	STEEL
4D	NON-STRUCTURAL BACKBEDDING SEALANT	HOT MELT

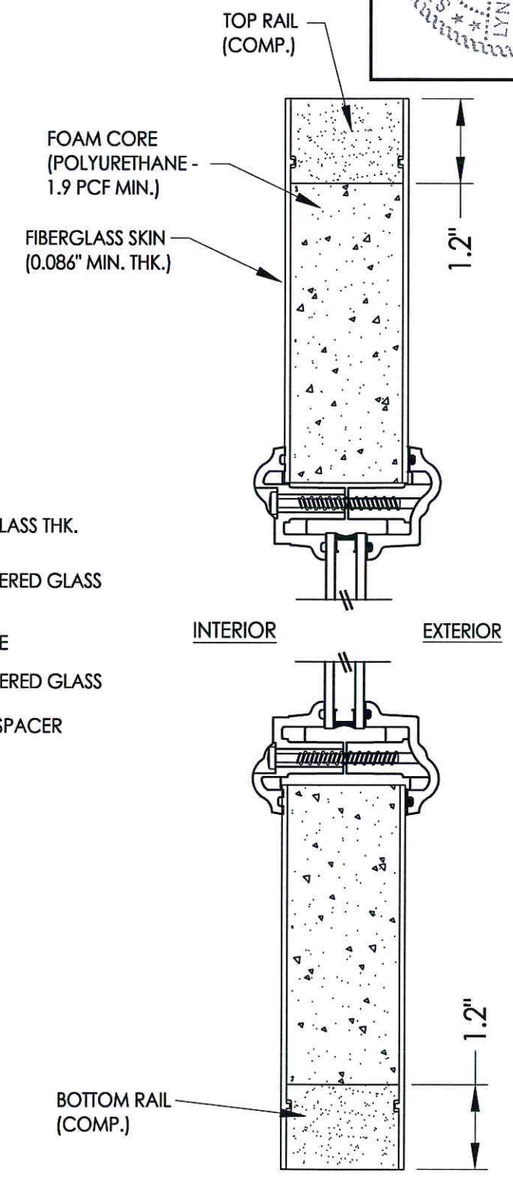

2/5 **VERTICAL CROSS SECTION**

STATE OF TEXAS
LYNDON F. SCHMIDT
104123
LICENSED
PROFESSIONAL ENGINEER

Documents Prepared By: Lyndon F. Schmidt, P.E.
TEXAS P.E. #104123
RW BUILDING CONSULTANTS, INC.
P.O. Box 230 Valrico FL. 33595
Phone No.: 813.659.9197
TEXAS BOARD OF PROFESSIONAL ENGINEERS
CERTIFICATE OF REGISTRATION # F-11852

PRODUCT: PLASTPRO INC. FIBERGLASS DOOR
PART OR ASSEMBLY: GLAZING DETAIL

NO.	DATE	REVISIONS	BY

DATE: 11/29/12
SCALE: N.T.S.
DWG. BY: JK
CHK. BY: LFS
DRAWING NO.: TX-4285
SHEET 5 OF 12

© 2012 R.W. BUILDING CONSULTANTS INC.

R:\A - Projects\Project Folders\Proj 1601 - 1700\PF 1662\D. RWBC Drawings\TX-4283-86.dwg, 4.3

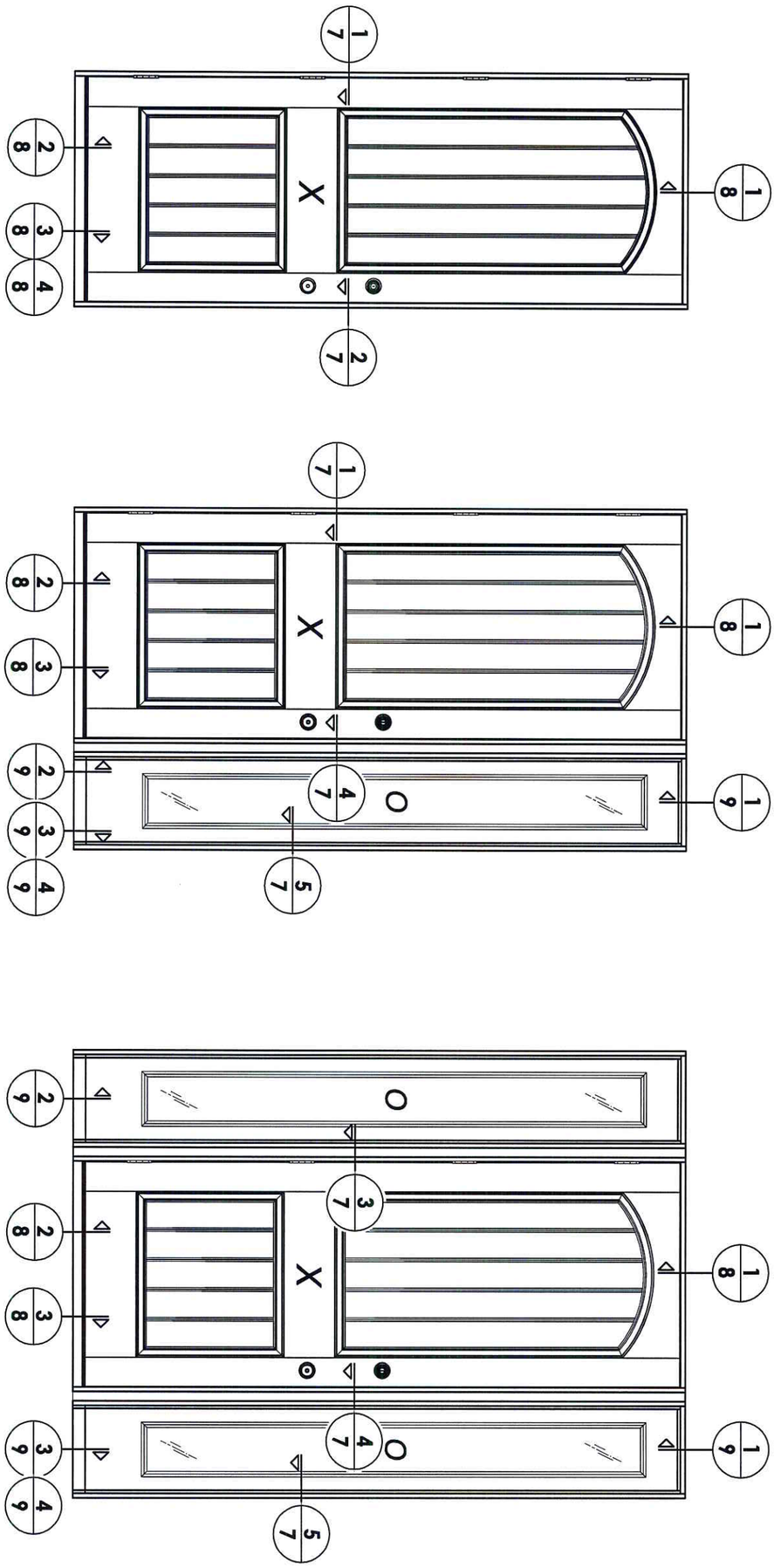

STATE OF TEXAS
LYNDON F. SCHMIDT
104123
LICENSED
PROFESSIONAL ENGINEER
12-5-12

SHEET 6 OF 12	DRAWING NO.: TX-4285	CHK. BY: LFS	DWG. BY: JK
SCALE: N.T.S.	DATE: 11/29/12		

NO.	DATE		BY

REVISIONS

PRODUCT:

PLASTPRO INC.
FIBERGLASS DOOR

PART OR ASSEMBLY:

ELEVATIONS

Documents Prepared By: Lyndon F. Schmidt, P.E.
TEXAS P.E. #104123

RW BUILDING CONSULTANTS, INC.
P.O. Box 230 Valrico FL. 33595
Phone No.: 813.659.9197

TEXAS BOARD OF PROFESSIONAL ENGINEERS
CERTIFICATE OF REGISTRATION # F-11852

© 2012 R.W. Building Consultants Inc.

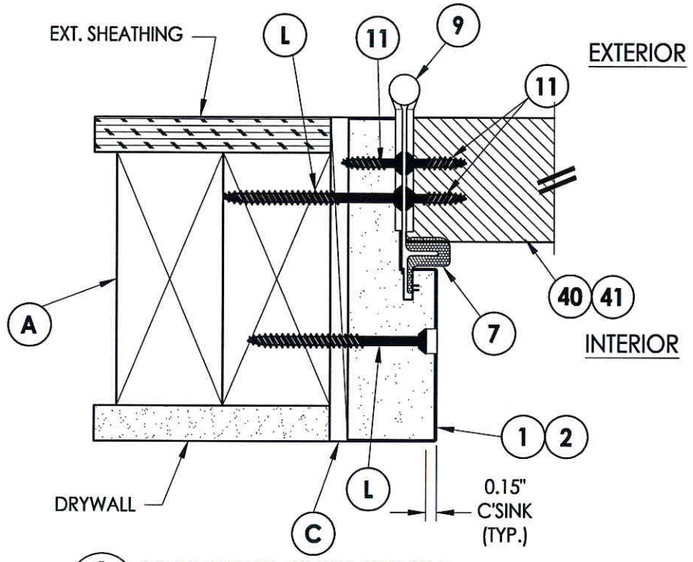

1/7 HORIZONTAL CROSS SECTION
Outswing shown - Inswing also approved

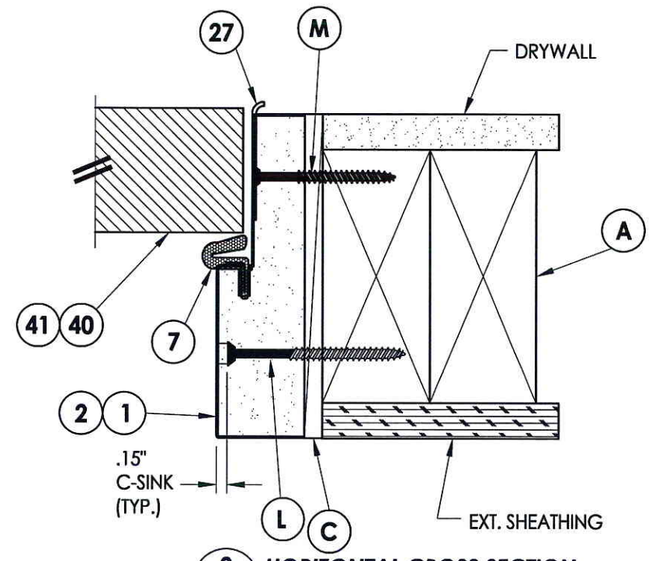

2/7 HORIZONTAL CROSS SECTION
Outswing shown - Inswing also approved

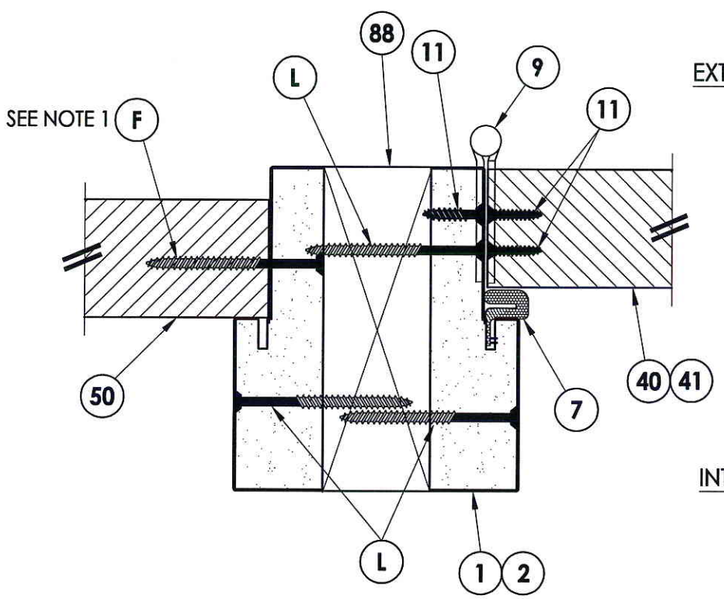

3/7 HORIZONTAL CROSS SECTION
Outswing shown - Inswing also approved

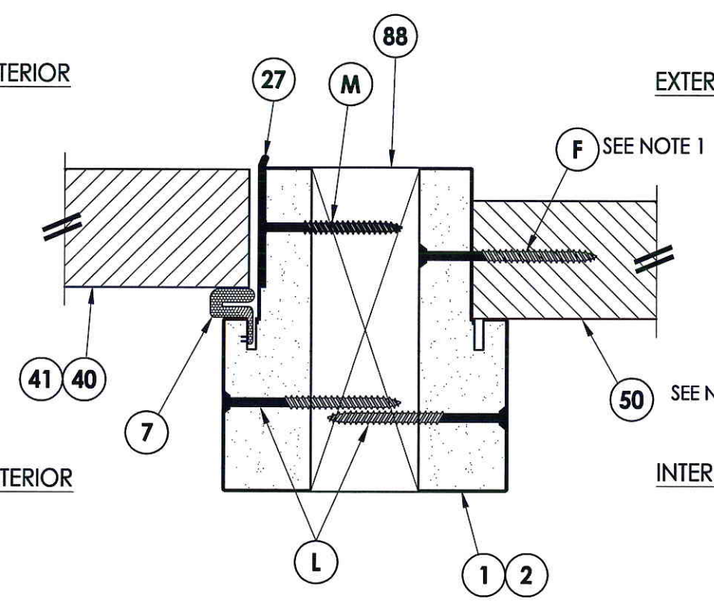

4/7 HORIZONTAL CROSS SECTION
Outswing shown - Inswing also approved

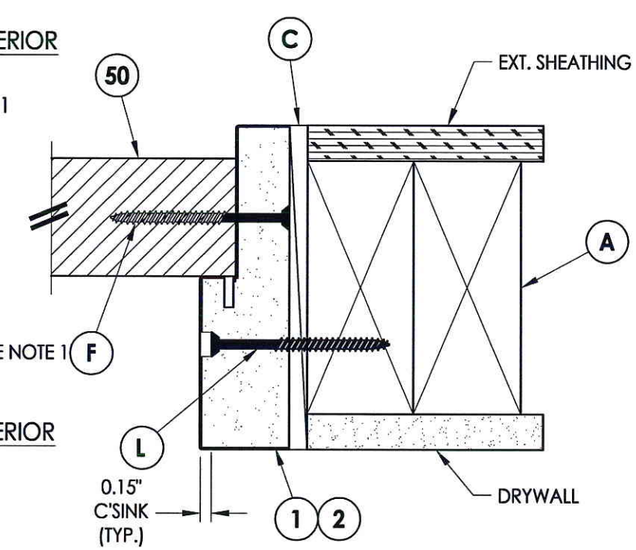

5/7 HORIZONTAL CROSS SECTION
Outswing shown - Inswing also approved

NOTE:
1. Spacing for item F: 6" from ends and 9 more equally spaced along sidelite (11 total).

STATE OF TEXAS
LYNDON F. SCHMIDT
104123
LICENSED PROFESSIONAL ENGINEER

Documents Prepared By: Lyndon F. Schmidt, P.E.
TEXAS P.E. #104123
RW BUILDING CONSULTANTS, INC.
P.O. Box 230 Valrico FL. 33595
Phone No.: 813.659.9197
TEXAS BOARD OF PROFESSIONAL ENGINEERS
CERTIFICATE OF REGISTRATION # F-11852

PRODUCT: PLASTPRO INC. FIBERGLASS DOOR

PART OR ASSEMBLY: HORIZONTAL CROSS SECTIONS

NO.	DATE	REVISIONS	BY

DATE: 11/29/12
SCALE: N.T.S.
DWG. BY: JK
CHK. BY: LFS
DRAWING NO.: TX-4285
SHEET 7 OF 12

© 2012 R.W. BUILDING CONSULTANTS INC.

R:\A - Projects\Project Folders\Proj 1601 - 1700\PF 1662\D. RWBC Drawings\TX-4283-86.dwg, 7.3

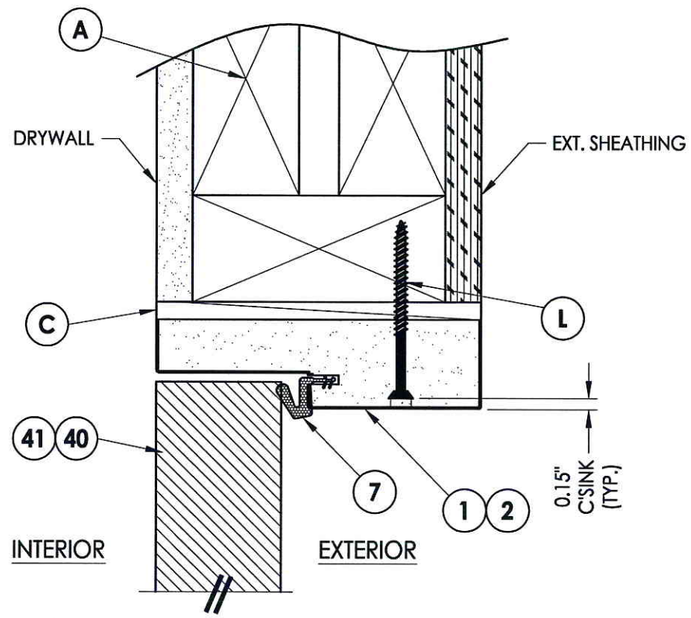

1/8 **VERTICAL CROSS SECTION**
Inswing shown - Outswing also approved

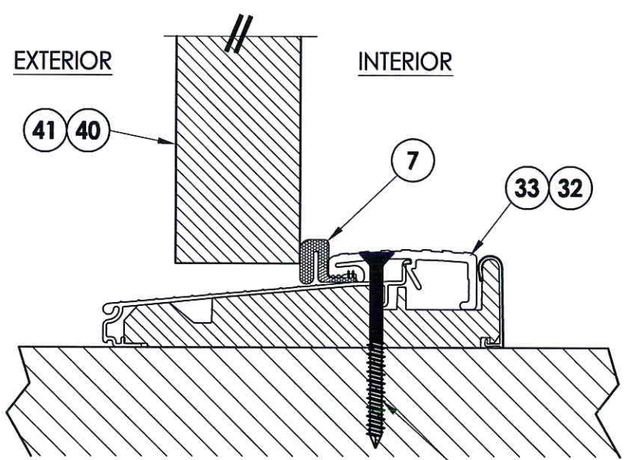

2/8 **VERTICAL CROSS SECTION**
Outswing confirguration

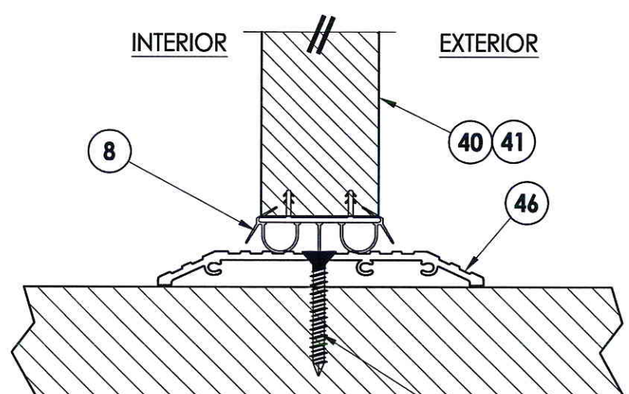

4/8 **VERTICAL CROSS SECTION**
Shown w/ ADA threshold

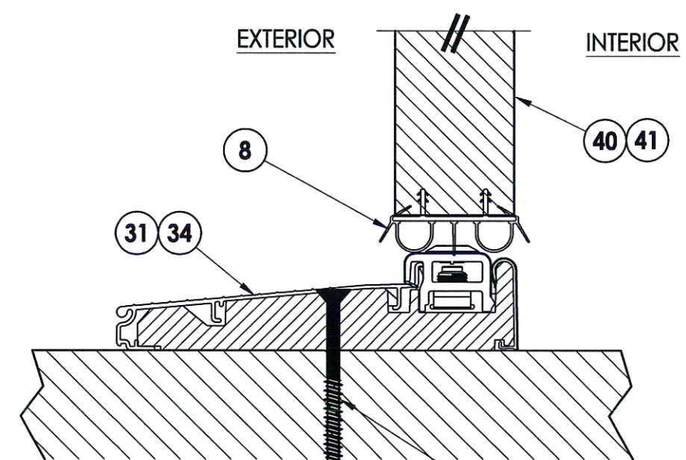

3/8 **VERTICAL CROSS SECTION**
Inswing confirguration

NOTE:
1. Sill anchor not required for single (X) units.

STATE OF TEXAS
LYNDON F. SCHMIDT
104123
LICENSED PROFESSIONAL ENGINEER

Documents Prepared By: Lyndon F. Schmidt, P.E.
TEXAS P.E. #104123
RW BUILDING CONSULTANTS, INC.
P.O. Box 230 Valrico FL. 33595
Phone No.: 813.659.9197
TEXAS BOARD OF PROFESSIONAL ENGINEERS
CERTIFICATE OF REGISTRATION # F-11852

PRODUCT: PLASTPRO INC. FIBERGLASS DOOR

PART OR ASSEMBLY: VERTICAL CROSS SECTIONS

NO.	DATE	REVISIONS	BY

DATE: 11/29/12
SCALE: N.T.S.
DWG. BY: JK
CHK. BY: LFS
DRAWING NO.: TX-4285
SHEET 8 OF 12

© 2012 R.W. BUILDING CONSULTANTS INC.

R:\A - Projects\Project Folders\Proj 1601 - 1700\PF 1662\D. RWBC Drawings\TX-4283-86.dwg, 8.3

NOTE:
1. Spacing for item F: 3" from each end.

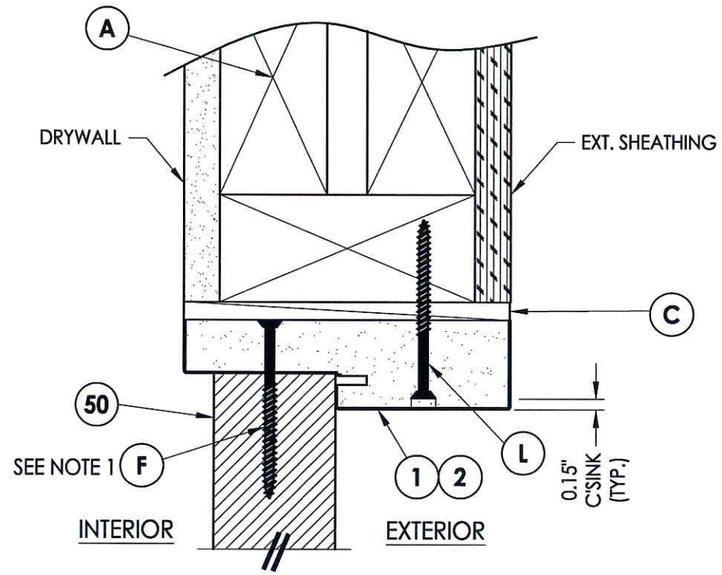

1/9 **VERTICAL CROSS SECTION**
Inswing shown - Outswing also approved

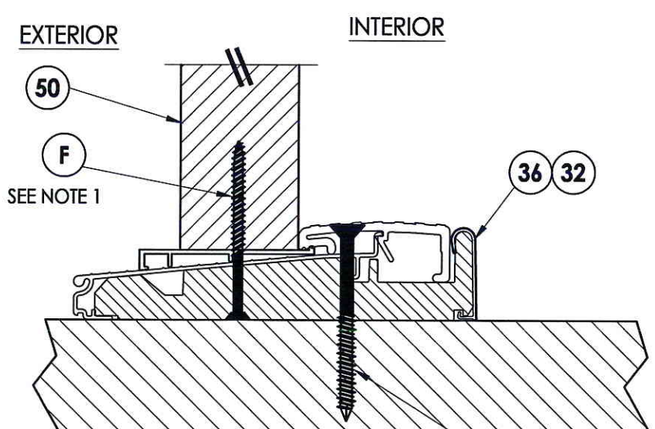

2/9 **VERTICAL CROSS SECTION**
Outswing shown

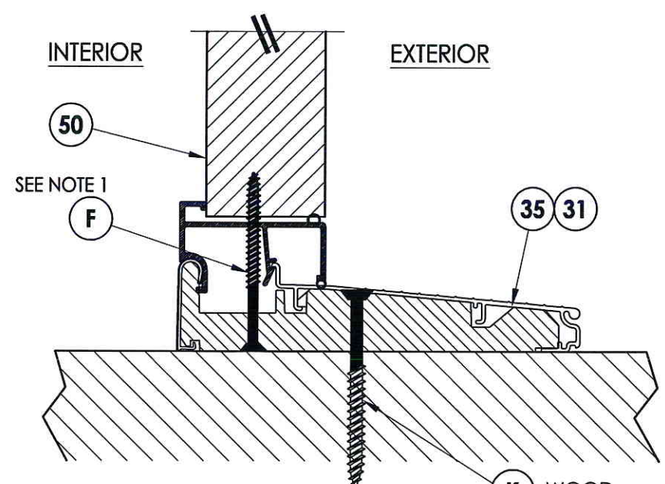

3/9 **VERTICAL CROSS SECTION**
Inswing shown

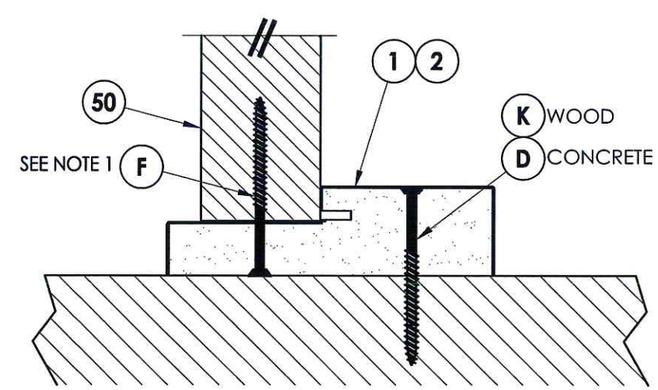

4/9 **VERTICAL CROSS SECTION**

STATE OF TEXAS
LYNDON F. SCHMIDT
104123
LICENSED PROFESSIONAL ENGINEER
12-5-12

Documents Prepared By: Lyndon F. Schmidt, P.E.
TEXAS P.E. #104123

RW BUILDING CONSULTANTS, INC.
P.O. Box 230 Valrico FL. 33595
Phone No.: 813.659.9197

TEXAS BOARD OF PROFESSIONAL ENGINEERS
CERTIFICATE OF REGISTRATION # F-11852

PRODUCT: PLASTPRO INC. FIBERGLASS DOOR

PART OR ASSEMBLY: VERTICAL CROSS SECTIONS

NO.	DATE	REVISIONS	BY

DATE: 11/29/12
SCALE: N.T.S.
DWG. BY: JK
CHK. BY: LFS
DRAWING NO.: TX-4285
SHEET 9 OF 12

© 2012 R.W. BUILDING CONSULTANTS INC.

R:\A - Projects\Project Folders\Proj 1601 - 1700\PF 1662\D. RWBC Drawings\TX-4283-86.dwg, 9.3

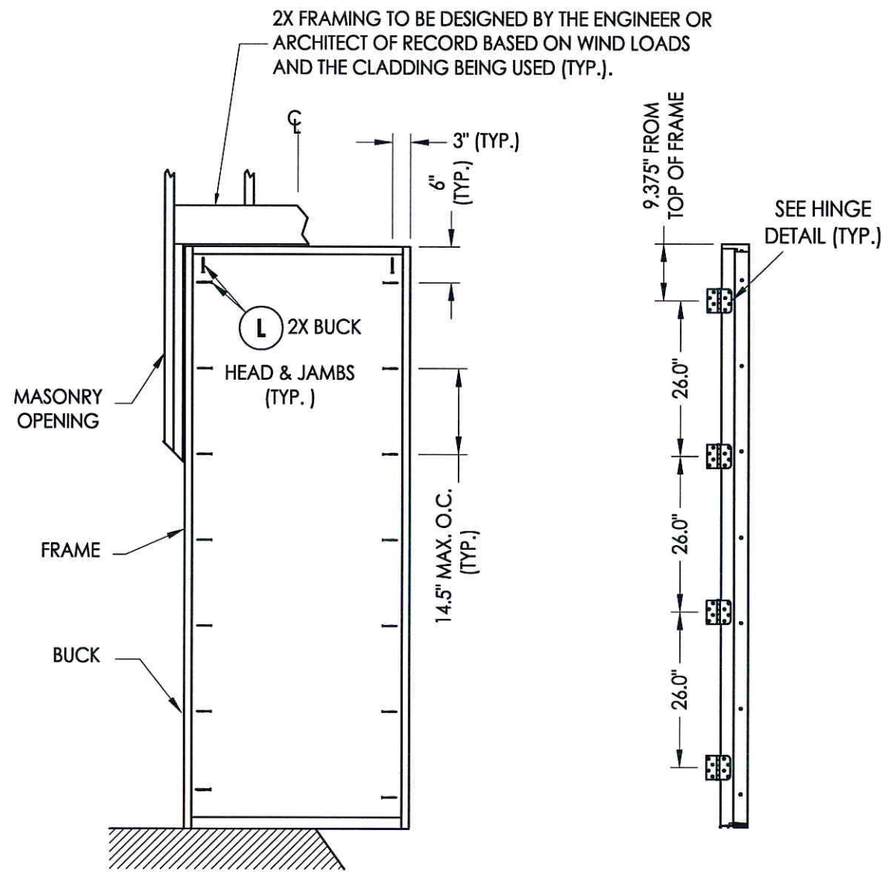

FRAME ANCHORING
(X)

HINGE JAMB

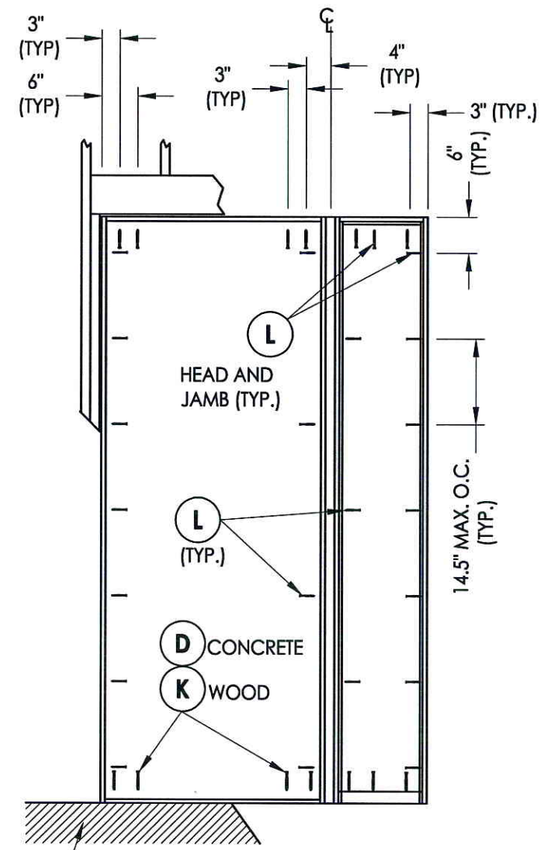

FRAME ANCHORING
OX

FLOOR SUBSTRATE MATERIAL (TYP.)
CONCRETE (MIN. 3000 PSI)
WOOD (S.G. >= 0.42)

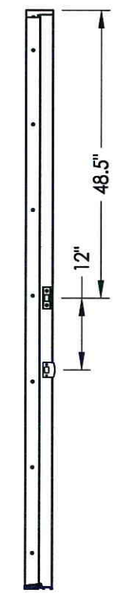

STRIKE JAMB

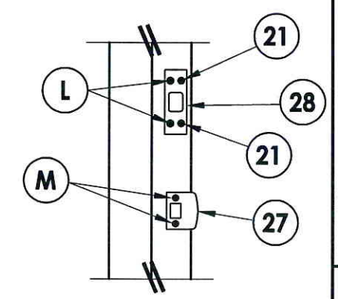

STRIKE DETAIL
Kwikset Signature Series
w/ 780 Deadbolt

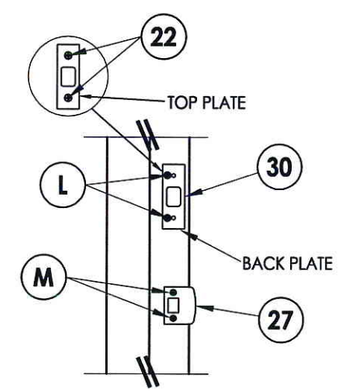

STRIKE DETAIL
Schlage F Series Latch &
B Series Deadbolt

CONCRETE ANCHOR NOTES:

1. *Concrete anchor locations at the corners may be adjusted to maintain the min. edge distance to mortar joints.*
2. *Concrete anchor locations noted as "MAX. ON CENTER" must be adjusted to maintain the min. edge distance to mortar joints, additional concrete anchors may be required to ensure the "MAX. ON CENTER" dimension are not exceeded.*
3. *Concrete anchor table:*

ANCHOR TYPE	ANCHOR SIZE	MIN. EMBEDMENT	MIN. CLEARANCE TO MASONRY EDGE	MIN. CLEARANCE TO ADJACENT ANCHOR
ITW TAPCON®	1/4"	1-3/4"	2-1/2"	3"
ELCO ULTRACON®	1/4"	1-3/4"	1"	3"

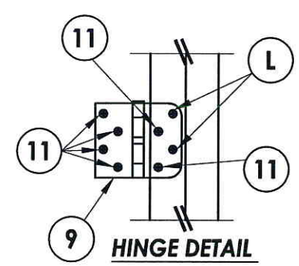

HINGE DETAIL
Inswing

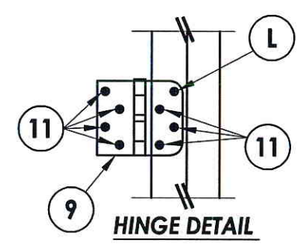

HINGE DETAIL
Outswing

STATE OF TEXAS
LYNDON F. SCHMIDT
104123
LICENSED
PROFESSIONAL ENGINEER
12-5-12

Documents Prepared By: Lyndon F. Schmidt, P.E.
TEXAS P.E. #104123
RW BUILDING CONSULTANTS, INC.
P.O. Box 230 Valrico FL. 33595
Phone No.: 813.659.9197
TEXAS BOARD OF PROFESSIONAL ENGINEERS
CERTIFICATE OF REGISTRATION # F-11852

PRODUCT: *PLASTPRO FIBERGLASS DOOR*

PART OR ASSEMBLY: *FRAME ANCHORING*

NO.	DATE	REVISIONS	BY

DATE: 11/29/12
SCALE: N.T.S.
DWG. BY: JK
CHK. BY: LFS
DRAWING NO.: TX-4285
SHEET 10 OF 12

© 2012 R.W. BUILDING CONSULTANTS INC.

R:\A - Projects\Project Folders\Proj 1601 - 1700\PF 1662\D. RWBC Drawings\TX-4283-86.dwg, 10.3

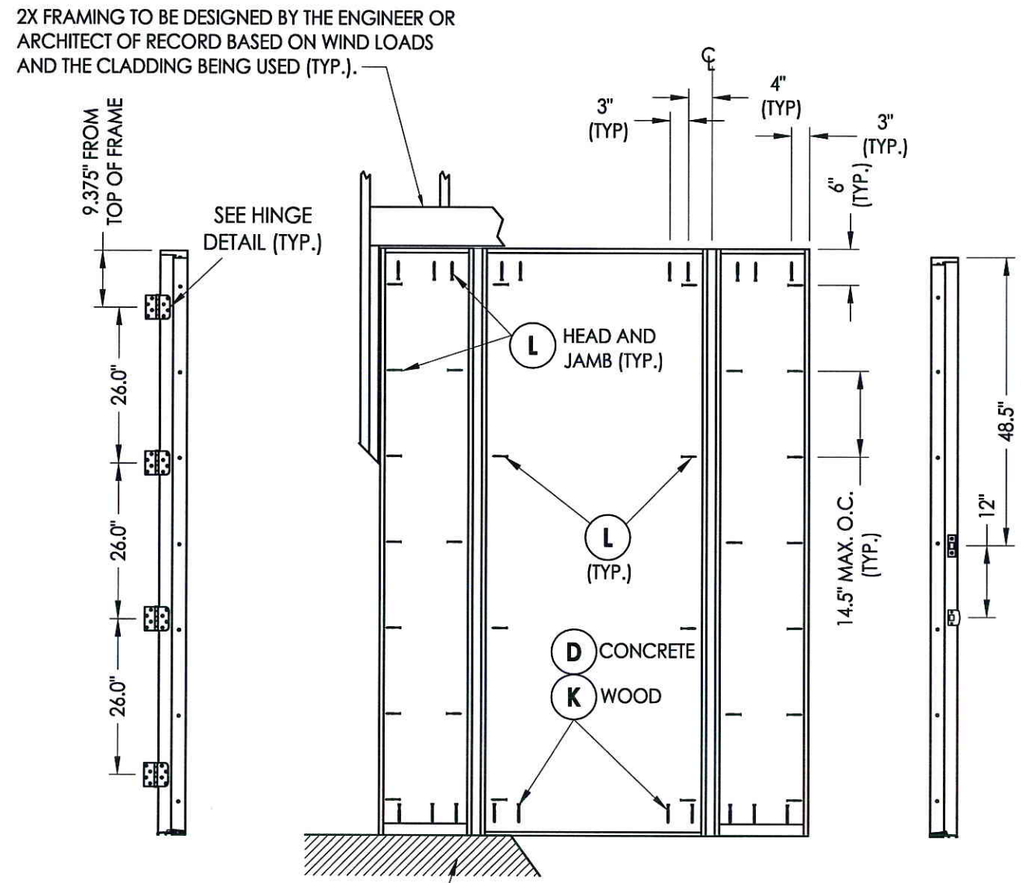

HINGE JAMB

FRAME ANCHORING
OXO

STRIKE JAMB

FLOOR SUBSTRATE MATERIAL (TYP.)
CONCRETE (MIN. 3000 PSI)
WOOD (S.G. >= 0.42)

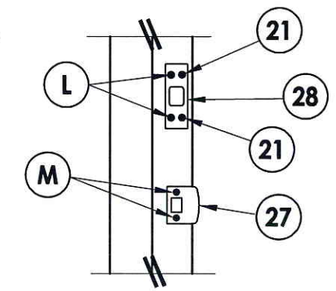

STRIKE DETAIL
Kwikset Signature Series
w/ 780 Deadbolt

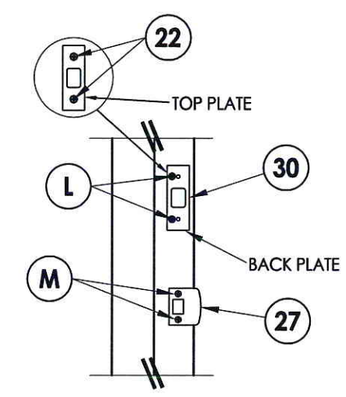

STRIKE DETAIL
Schlage F Series Latch &
B Series Deadbolt

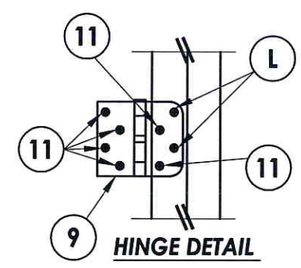

HINGE DETAIL
Inswing

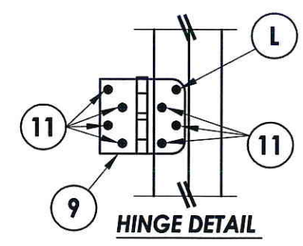

HINGE DETAIL
Outswing

CONCRETE ANCHOR NOTES:

1. *Concrete anchor locations at the corners may be adjusted to maintain the min. edge distance to mortar joints.*
2. *Concrete anchor locations noted as "MAX. ON CENTER" must be adjusted to maintain the min. edge distance to mortar joints, additional concrete anchors may be required to ensure the "MAX. ON CENTER" dimension are not exceeded.*
3. *Concrete anchor table:*

ANCHOR TYPE	ANCHOR SIZE	MIN. EMBEDMENT	MIN. CLEARANCE TO MASONRY EDGE	MIN. CLEARANCE TO ADJACENT ANCHOR
ITW TAPCON®	1/4"	1-3/4"	2-1/2"	3"
ELCO ULTRACON®	1/4"	1-3/4"	1"	3"

STATE OF TEXAS
LYNDON F. SCHMIDT
104123
LICENSED PROFESSIONAL ENGINEER
12-5-12

Documents Prepared By: Lyndon F. Schmidt, P.E.
TEXAS P.E. #104123
RW BUILDING CONSULTANTS, INC.
P.O. Box 230 Valrico FL. 33595
Phone No.: 813.659.9197
TEXAS BOARD OF PROFESSIONAL ENGINEERS
CERTIFICATE OF REGISTRATION # F-11852

PRODUCT: PLASTPRO FIBERGLASS DOOR

PART OR ASSEMBLY: FRAME ANCHORING

NO.	DATE	REVISIONS	BY

DATE: 11/29/12
SCALE: N.T.S.
DWG. BY: JK
CHK. BY: LFS
DRAWING NO.: TX-4285
SHEET 11 OF 12

© 2012 R.W. BUILDING CONSULTANTS INC.

R:\A - Projects\Project Folders\Proj 1601 - 1700\PF 1662\D. RWBC Drawings\TX-4283-86.dwg, 11.3

BILL OF MATERIALS

ITEM #	DESCRIPTION	MATERIAL
A	2X FRAMING (G >= 0.42)	WOOD
C	1/4" MAX. SHIM SPACE	-
D	1/4" ELCO OR ITW CONCRETE SCREW (1-3/4" MIN. EMBEDMENT)	STEEL
F	#9 X 2-1/2" PFH WOOD SCREW	STEEL
K	#10 X 3" PFH WOOD SCREW (1-1/2" MIN. EMBEDMENT)	STEEL
L	#10 X 2-1/2" PFH WOOD SCREW (1.15" MIN. EMBEDMENT)	STEEL
M	#8 X 2" PFH WOOD SCREW	STEEL
1	POLY FIBER JAMB	POLY FIBER
2	FINGER JOINTED PINE JAMB	WOOD
7	WEATHERSTRIP	FOAM
8	DOOR BOTTOM SWEEP	VINYL
9	4" X 4" BUTT HINGE	STEEL
11	#9 X 3/4" PFH WOOD SCREW	STEEL
21	#8 X 5/8" PFH WOOD SCREW	STEEL
22	10-32 X 3/8" PFH MACHINE SCREW	STEEL
27	LATCH STRIKE PLATE	STEEL
28	DEADBOLT STRIKE PLATE (Kwikset Signature Series)	STEEL
30	DEADBOLT STRIKE PLATE (Schlage B Series)	STEEL
31	INSWING ADJUSTABLE THRESHOLD	ALUM / WOOD
32	OUTSWING THRESHOLD	ALUM / WOOD
33	OUTSWING THRESHOLD	ALUM / COMP
34	INSWING ADJUSTABLE THRESHOLD	ALUM / COMP
35	INSWING ADJUSTABLE THRESHOLD w/ SIDELITE ADAPTER	ALUM / COMP
36	OUTSWING THRESHOLD w/ SIDELITE ADAPTER	ALUM / COMP
40	DOOR PANEL - SEE DOOR PANEL DETAIL SHEET FOR CONSTRUCTION DETAILS	-
41	DOOR PANEL - SEE DOOR PANEL DETAIL SHEET FOR CONSTRUCTION DETAILS	-
46	ADA THRESHOLD	ALUM
50	SIDELITE PANEL - SEE SIDELITE PANEL DETAIL SHEET FOR CONSTRUCTION DETAILS	-
61	ODL LITE FRAME	ALUM
62	RSL LITE FRAME	PVC
88	2X REINFORCEMENT (G >= 0.55)	WOOD

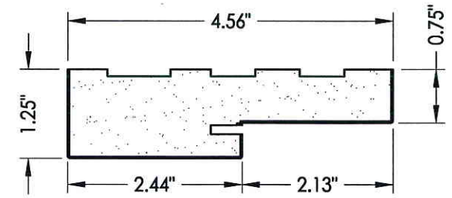

1 **HEAD & SIDE**
Poly fiber jamb

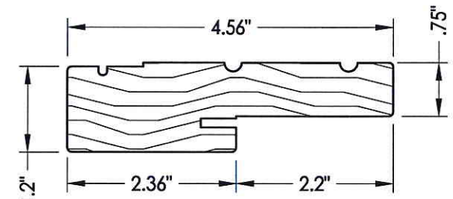

2 **WOOD JAMB**

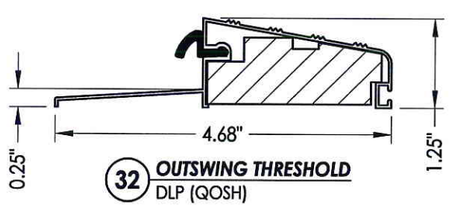

32 **OUTSWING THRESHOLD**
DLP (QOSH)

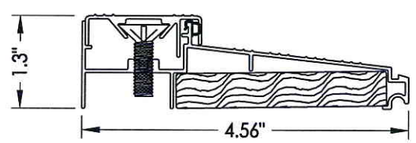

31 **INSWING THRESHOLD**
DLP (ISCS)

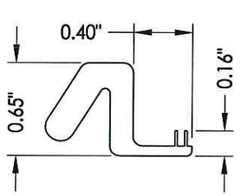

7 **WEATHERSTRIP**
Endura Force 5

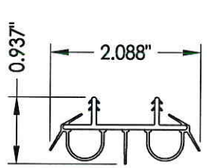

8 **DOOR BOTTOM SWEEP**

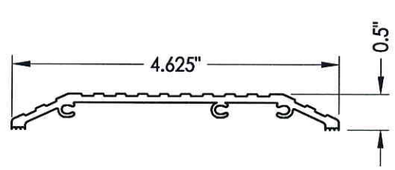

46 **ADA THRESHOLD**
DLP

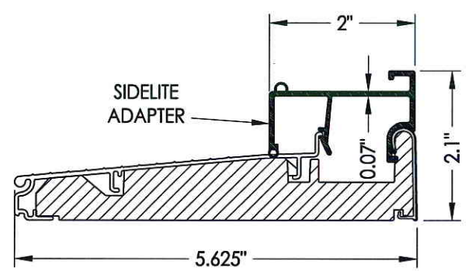

35 **INSWING THRESHOLD w/ SIDELITE ADAPTER**
Endura (Z-Series)

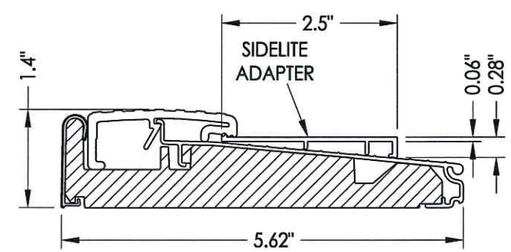

36 **OUTSWING THRESHOLD w/ SIDELITE ADAPTER**
Endura (Z-Series)

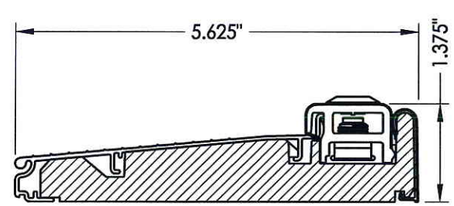

34 **ADJUSTABLE INSWING THRESHOLD**
Endura (Z-Series)

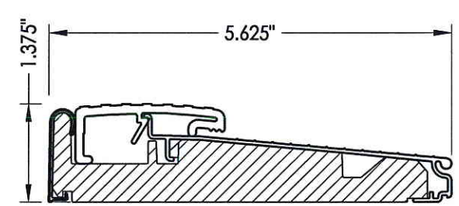

33 **OUTSWING THRESHOLD**
Endura (Z-Series)

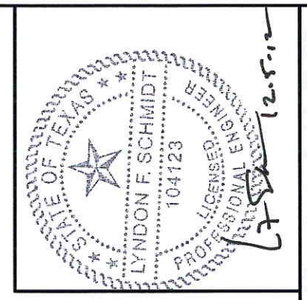

Documents Prepared By: Lyndon F. Schmidt, P.E.
TEXAS P.E. #104123

RW BUILDING CONSULTANTS, INC.
P.O. Box 230 Valrico FL. 33595
Phone No.: 813.659.9197

TEXAS BOARD OF PROFESSIONAL ENGINEERS
CERTIFICATE OF REGISTRATION # F-11852

PRODUCT: PLASTPRO INC. FIBERGLASS DOOR

PART OR ASSEMBLY: BILL OF MATERIALS AND COMPONENTS

NO.	DATE	REVISIONS	BY

DATE: 11/29/12
SCALE: N.T.S.
DWG. BY: JK
CHK. BY: LFS
DRAWING NO.: TX-4285
SHEET 12 OF 12

© 2012 R.W. BUILDING CONSULTANTS INC.

R:\A - Projects\Project Folders\Proj 1601 - 1700\PF 1662\D. RWBC Drawings\TX-4283-86.dwg, 12.3