Taylor Building Products, Inc.
631 N. FIRST ST.
WEST BRANCH, MI 48661

TIMBERLINE DELUXE

GLAZED FIBERGLASS DOUBLE DOOR w/ or w/o SIDELITES

INSWING

"NON-IMPACT"

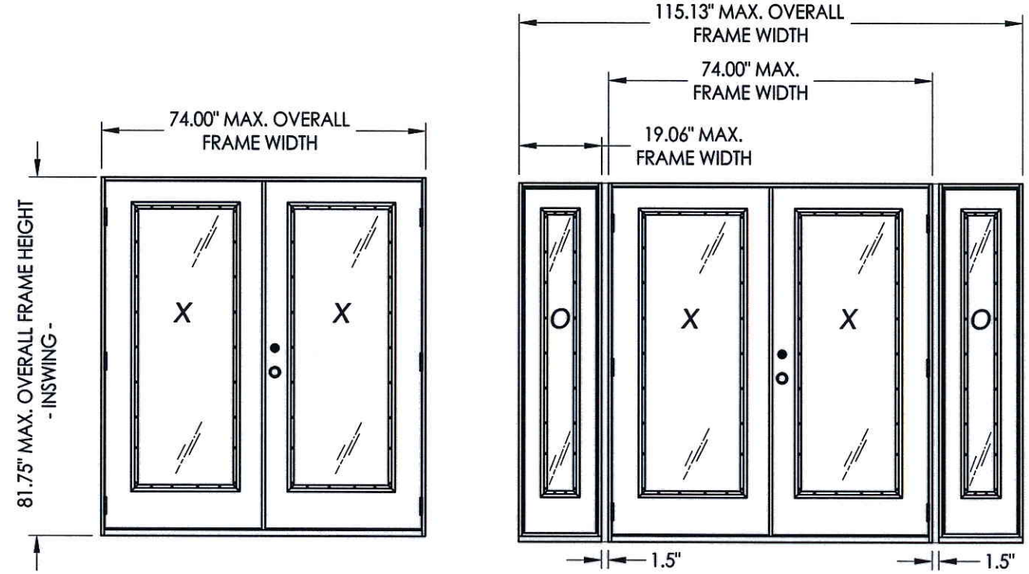

EVALUATED FOR USE IN THE STATE OF TEXAS

The Taylor Fiberglass door described herein complies with the 2006 International Residential Code (IRC), Sections R301 & R613 and the 2006 International Building Code (IBC), Sections 1405.12, 1609, 1714.5, 2403 and 2404 (including Texas revisions) subject to the following conditions:

1. Anchors shall be as listed and spaced as shown in the details. Anchor embedment to base material shall be beyond wall dressing or stucco.
2. When used in areas requiring wind-borne debris protection, this product is required to be protected with an impact resistant covering that complies with Section R301.2.1.2 of the IRC and Section 1609.1.2 of the IBC.
3. Allowable design pressure requirements must be equal to or less than the design pressure rating shown in the design pressure chart, sheet 1 of this drawing.
4. Conditions not covered by this drawing are subject to further engineering analysis.

TABLE OF CONTENTS

SHEET#	DESCRIPTION
1	Typical elevations, design pressures & general notes
2	Door panel details and glazing detail
3	Sidelite panel details and glazing detail
4	Elevations
5	Horizontal cross sections
6	Vertical cross sections
7	Vertical cross sections
8	Frame anchoring
9	Bill of materials and components

CONFIGURATION	MAX. FRAME DIMENSION	MAX. D.L.O. DIMENSION	DESIGN PRESSURE (PSF) INSWING	
			POSITIVE	NEGATIVE
XX	74.00" x 81.75"	21.13" x 63.13"	+55.0	-60.0
OXXO	115.13" x 81.75"	21.13" x 63.13"	+55.0	-60.0

STATE OF TEXAS
LYNDON F. SCHMIDT
104123
LICENSED PROFESSIONAL ENGINEER
12.18.13

Documents Prepared By: Lyndon F. Schmidt, P.E.
TEXAS P.E. #104123

RW BUILDING CONSULTANTS, INC.
P.O. Box 230 Valrico FL. 33595
Phone No.: 813.659.9197

TEXAS BOARD OF PROFESSIONAL ENGINEERS
CERTIFICATE OF REGISTRATION # F-11852

PRODUCT: TAYLOR FIBERGLASS DOOR

PART OR ASSEMBLY: TYPICAL ELEVATION, DESIGN PRESSURES & GENERAL NOTES

NO.	DATE	BY
REVISIONS		

DATE: 10/01/12
SCALE: N.T.S.
DWG. BY: JK
CHK. BY: LFS
DRAWING NO.: TX-4255
SHEET 1 OF 9

© 2012 R.W. BUILDING CONSULTANTS INC.

R:\A - Projects\Project Folders\Proj 1601 - 1700\PF 1673\D. RWBC Drawings\Texas 2012\TX-4254-55.dwg, TX-4255

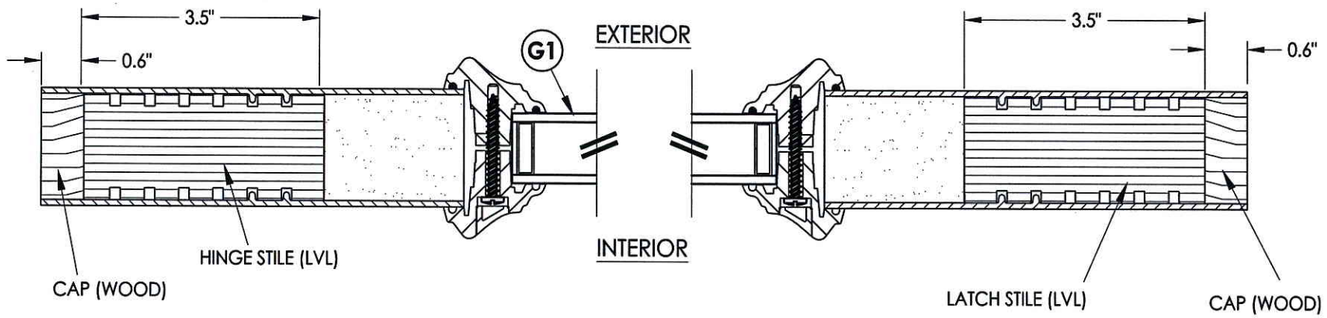

1/2 **HORIZONTAL CROSS SECTION**

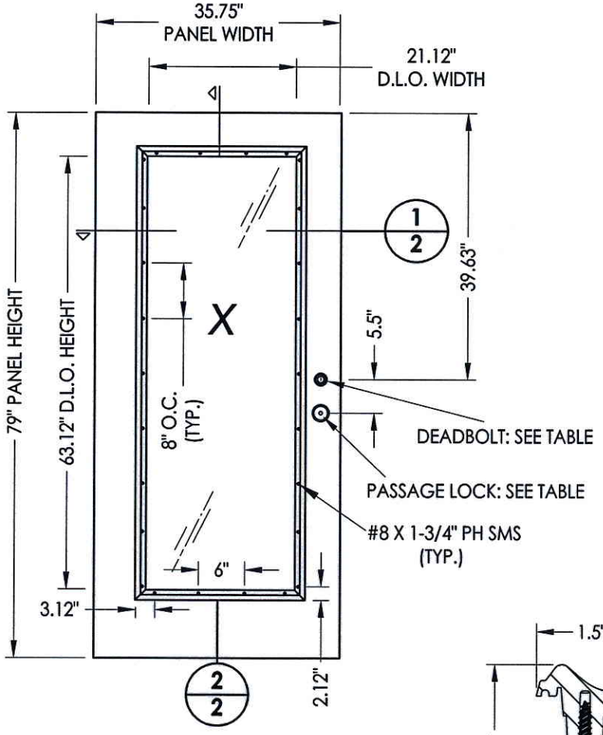

40 **DOOR PANEL**
Taylor Door
w/ Mastergrain Fiberglass skins

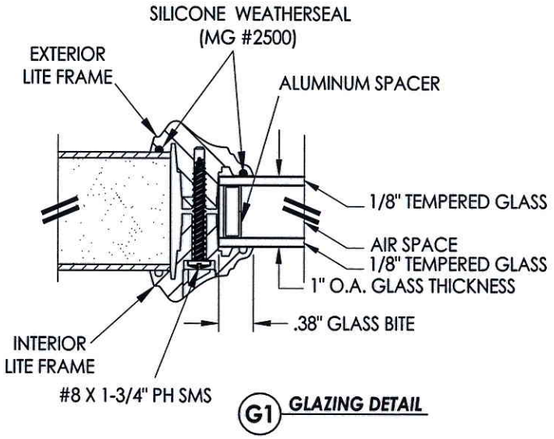

G1 **GLAZING DETAIL**

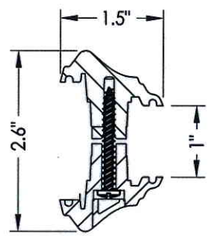

LITE FRAME
Polypropylene

HARDWARE TABLE		
MANUFACTURER	MODEL	
KWIKSET	KNOB: DEADBOLT:	KWIKSET SIGNATURE SERIES KWIKSET SIGNATURE SERIES (980)
KWIKSET	KNOB: DEADBOLT:	KWIKSET SERIES KWIKSET SERIES (660)
SCHLAGE	KNOB: DEADBOLT:	"F" SERIES "B" SERIES

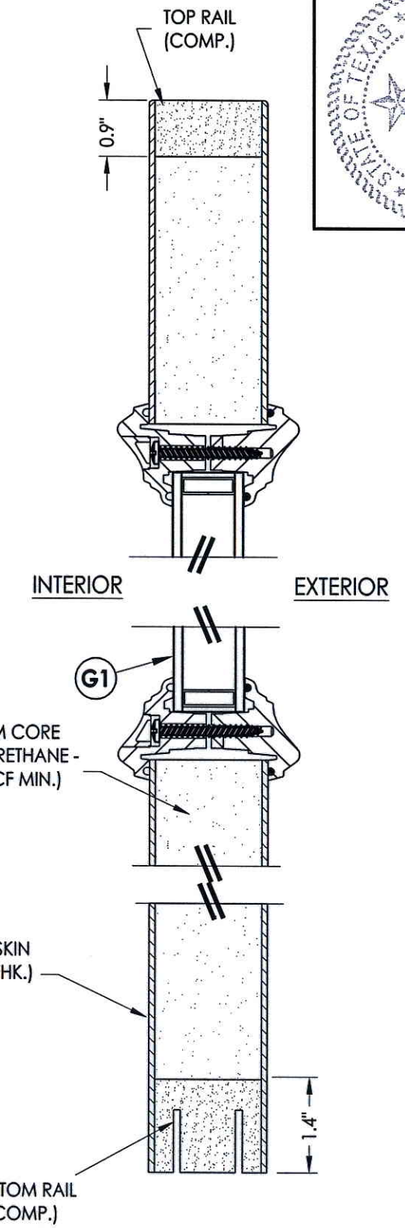

2/2 **VERTICAL CROSS SECTION**

Documents Prepared By: Lyndon F. Schmidt, P.E.
TEXAS P.E. #104123
RW BUILDING CONSULTANTS, INC.
P.O. Box 230 Valrico FL 33595
Phone No.: 813.859.9197
TEXAS BOARD OF PROFESSIONAL ENGINEERS
CERTIFICATE OF REGISTRATION # F-11852

STATE OF TEXAS · LYNDON F. SCHMIDT · 104123 · LICENSED PROFESSIONAL ENGINEER

12-18-12

PRODUCT: TAYLOR FIBERGLASS DOOR

PART OR ASSEMBLY: DOOR PANEL DETAILS AND GLAZING DETAL

NO.	DATE	REVISIONS	BY

DATE: 10/01/12
SCALE: N.T.S.
DWG. BY: JK
CHK. BY: LFS
DRAWING NO.: TX-4255
SHEET 2 OF 9

© 2012 R.W. BUILDING CONSULTANTS INC.

R:\A - Projects\Project Folders\Proj 1601 - 1700\PF 1673\D. RWBC Drawings\Texas 2012\TX-4254-55.dwg, 2 (2)

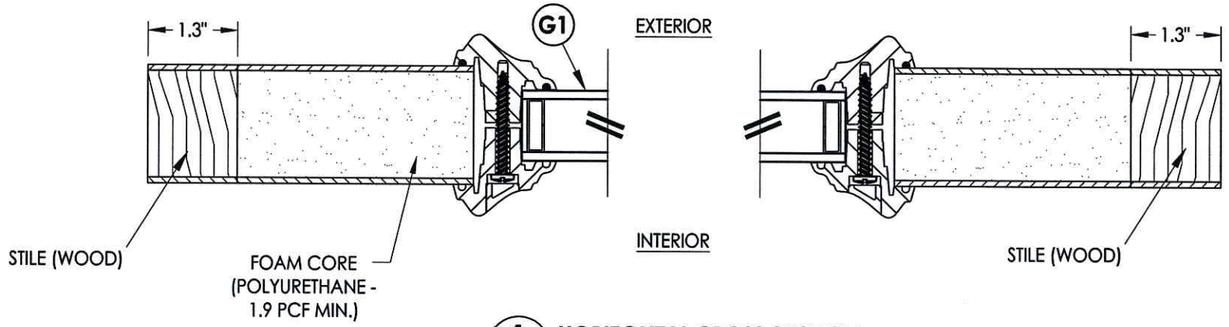

1/3 **HORIZONTAL CROSS SECTION**

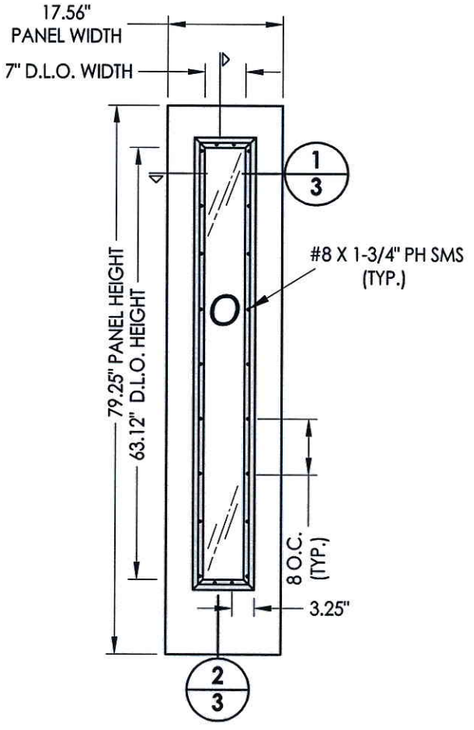

50 **SIDELITE PANEL**
Fiberglass

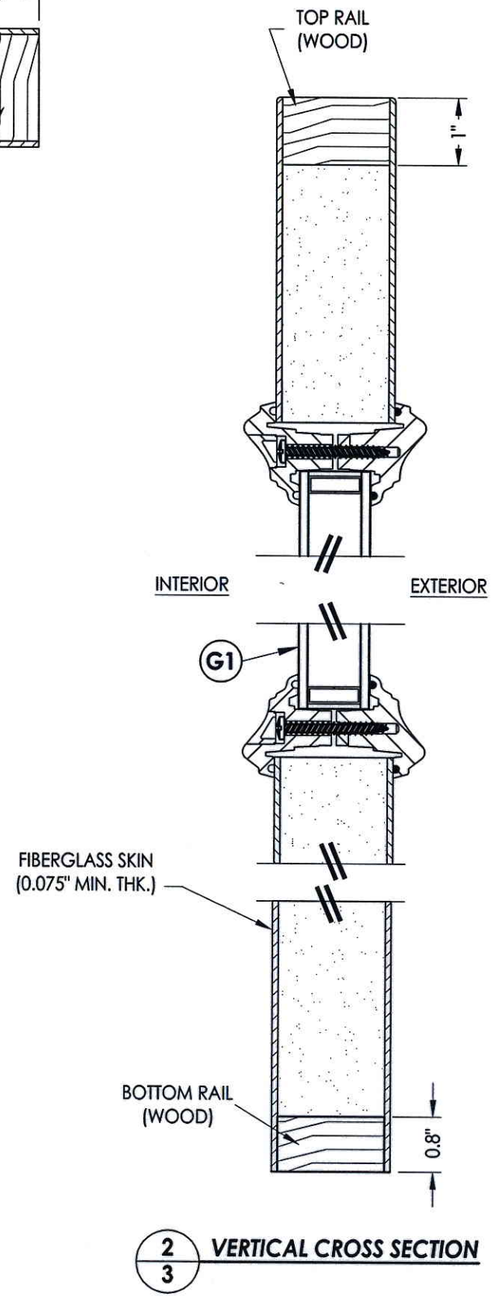

2/3 **VERTICAL CROSS SECTION**

Documents Prepared By: Lyndon F. Schmidt, P.E.
TEXAS P.E. #104123

RW BUILDING CONSULTANTS, INC.
P.O. Box 230 Valrico FL, 33595
Phone No.: 813.659.9197

TEXAS BOARD OF PROFESSIONAL ENGINEERS
CERTIFICATE OF REGISTRATION # F-11852

PRODUCT: TAYLOR FIBERGLASS DOOR

PART OR ASSEMBLY: SIDELITE PANEL DETAILS AND GLAZING DETAIL

NO.	DATE	BY
REVISIONS		

DATE: 10/01/12
SCALE: N.T.S.
DWG. BY: JK
CHK. BY: LFS
DRAWING NO.: TX-4255
SHEET 3 OF 9

© 2012 R.W. BUILDING CONSULTANTS INC.

R:\A - Projects\Project Folders\Proj 1601 - 1700\PF 1673\D. RWBC Drawings\Texas 2012\TX-4254-55.dwg, 3 (2)

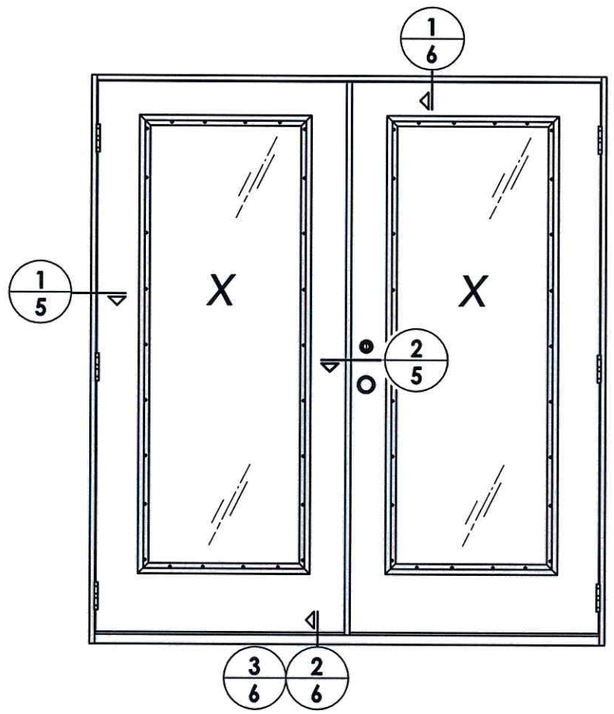

ELEVATION (XX)

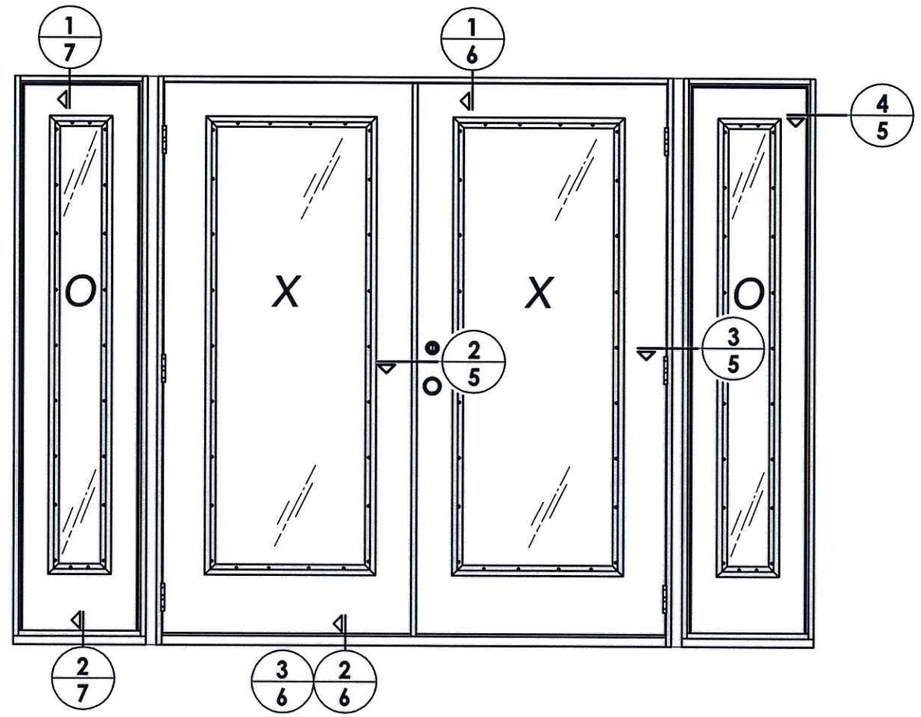

ELEVATION (OXXO)

STATE OF TEXAS
LYNDON F. SCHMIDT
104123
LICENSED PROFESSIONAL ENGINEER
2.18.13

Documents Prepared By: Lyndon F. Schmidt, P.E.
TEXAS P.E. #104123

RW BUILDING CONSULTANTS, INC.
P.O. Box 230 Valrico FL. 33595
Phone No.: 813.659.9197

TEXAS BOARD OF PROFESSIONAL ENGINEERS
CERTIFICATE OF REGISTRATION # F-11852

PRODUCT: TAYLOR FIBERGLASS DOOR

PART OR ASSEMBLY: ELEVATIONS

NO.	DATE	REVISIONS	BY

DATE: 10/01/12
SCALE: N.T.S.
DWG. BY: JK
CHK. BY: LFS
DRAWING NO.: TX-4255
SHEET 4 OF 9

© 2012 R.W. BUILDING CONSULTANTS INC.

R:\A - Projects\Project Folders\Proj 1601 - 1700\PF 1673\D. RWBC Drawings\Texas 2012\TX-4254-55.dwg, 4 (2)

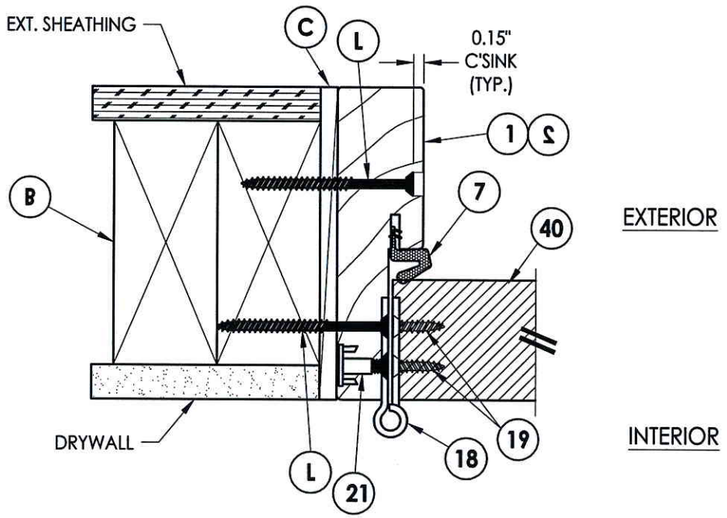

1/5 **HORIZONTAL CROSS SECTION**

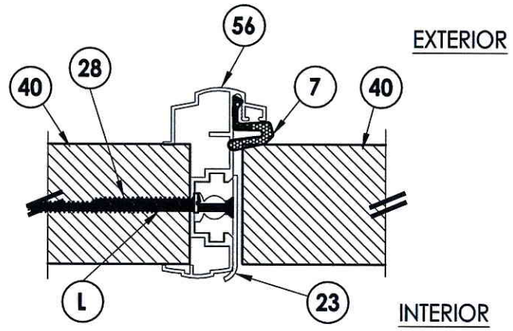

2/5 **HORIZONTAL CROSS SECTION**

NOTE:

1. Sidelite ass'y fastener; 6" from each end and 6 more screws equally spaced between. (8 screws total per jamb.)
2. Trim secured with 1" Brad Nail @ 6" O.C. (TYP).

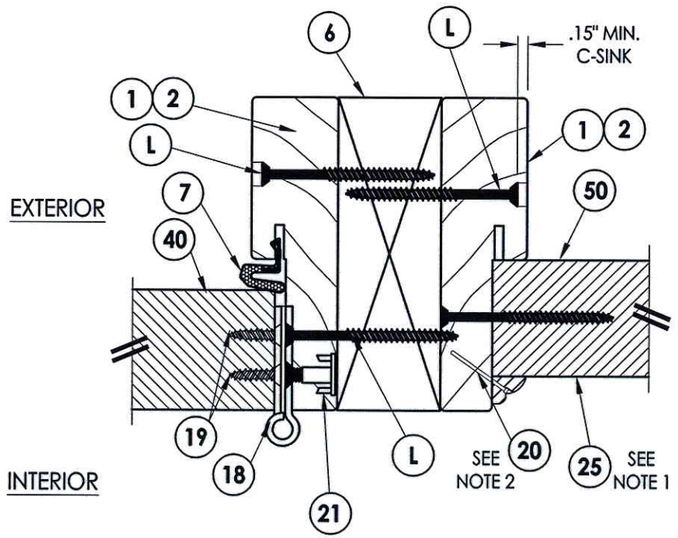

3/5 **HORIZONTAL CROSS SECTION**

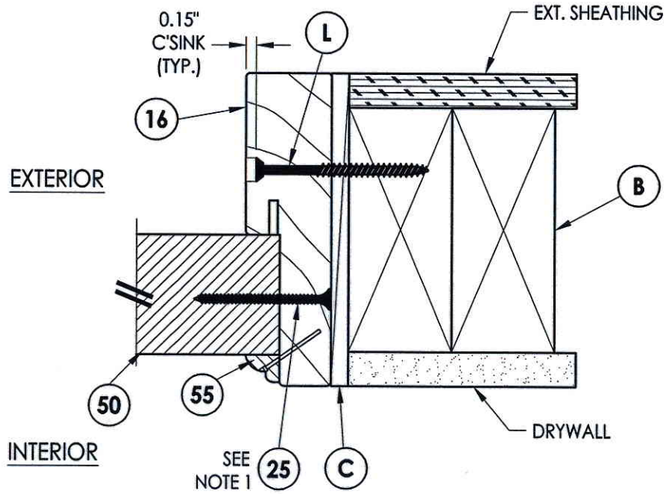

4/5 **HORIZONTAL CROSS SECTION**

Documents Prepared By: Lyndon F. Schmidt, P.E.
TEXAS P.E. #104123

R|W BUILDING CONSULTANTS, INC.
P.O. Box 230 Valrico FL. 33595
Phone No.: 813.659.9197

TEXAS BOARD OF PROFESSIONAL ENGINEERS
CERTIFICATE OF REGISTRATION # F-11852

PRODUCT: *TAYLOR FIBERGLASS DOOR*

PART OR ASSEMBLY: *HORIZONTAL CROSS SECTIONS*

NO.	DATE	BY	REVISIONS

DATE: 10/01/12
SCALE: N.T.S.
DWG. BY: JK
CHK. BY: LFS
DRAWING NO.: TX-4255
SHEET 5 OF 9

© 2012 R.W. BUILDING CONSULTANTS INC.

R:\A - Projects\Project Folders\Proj 1601 - 1700\PF 1673\D. RWBC Drawings\Texas 2012\TX-4254-55.dwg, 5 (2)

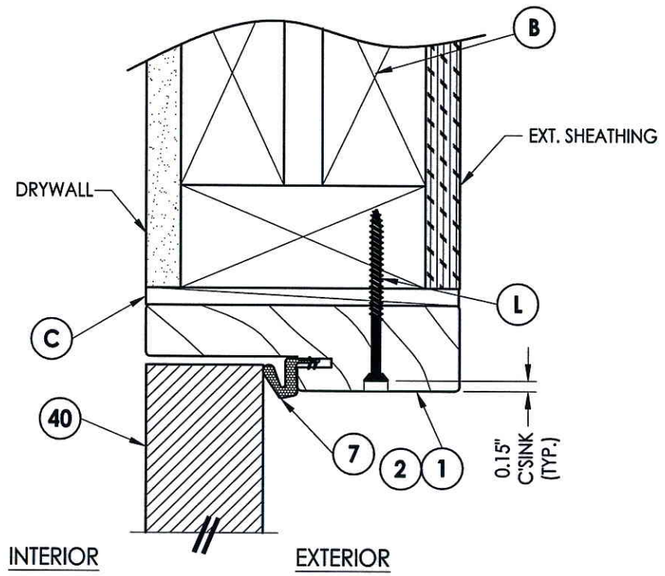

1/6 **VERTICAL CROSS SECTION**

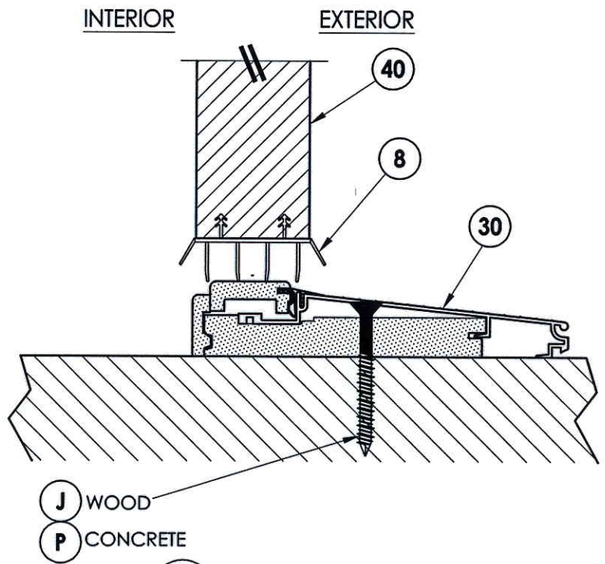

2/6 **VERTICAL CROSS SECTION**
Inswing sill

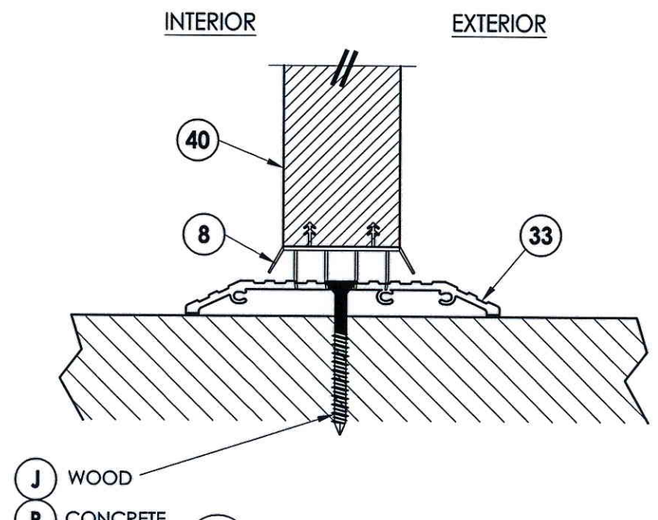

3/6 **VERTICAL CROSS SECTION**
Shown w/ ADA threshold

STATE OF TEXAS
LYNDON F. SCHMIDT
104123
LICENSED PROFESSIONAL ENGINEER
12-18-13

Documents Prepared By: Lyndon F. Schmidt, P.E.
TEXAS P.E. #104123

R|W BUILDING CONSULTANTS, INC.
P.O. Box 230 Valrico FL 33595
Phone No.: 813.659.9197

TEXAS BOARD OF PROFESSIONAL ENGINEERS
CERTIFICATE OF REGISTRATION # F-11852

PRODUCT: TAYLOR FIBERGLASS DOOR

PART OR ASSEMBLY: VERTICAL CROSS SECTIONS

NO.	DATE	BY	REVISIONS

DATE: 10/01/12
SCALE: N.T.S.
DWG. BY: JK
CHK. BY: LFS
DRAWING NO.: TX-4255
SHEET 6 OF 9

© 2012 R.W. BUILDING CONSULTANTS INC.

R:\A - Projects\Project Folders\Proj 1601 - 1700\PF 1673\D. RWBC Drawings\Texas 2012\TX-4254-55.dwg, 6 (2)

1/7 ***VERTICAL CROSS SECTION***

2/7 ***VERTICAL CROSS SECTION***
Inswing sill

NOTE:

1. Screws thru head jamb located 3" from each end.
2. Trim secured with 1" Brad Nail @ 6" O.C. (TYP).

Documents Prepared By: Lyndon F. Schmidt, P.E.
TEXAS P.E. #104123

RW BUILDING CONSULTANTS, INC.
P.O. Box 230 Valrico FL. 33595
Phone No.: 813.659.9197

TEXAS BOARD OF PROFESSIONAL ENGINEERS
CERTIFICATE OF REGISTRATION # F-11852

PRODUCT: TAYLOR FIBERGLASS DOOR

PART OR ASSEMBLY: VERTICAL CROSS SECTIONS

NO.	DATE	BY	REVISIONS

DATE: 10/01/12
SCALE: N.T.S.
DWG. BY: JK
CHK. BY: LFS
DRAWING NO.: TX-4255
SHEET 7 OF 9

© 2012 R.W. BUILDING CONSULTANTS INC.

R:\A - Projects\Project Folders\Proj 1601 - 1700\PF 1673\D. RWBC Drawings\Texas 2012\TX-4254-55.dwg, 7 (2)

** Additional anchor required
for DP > 50 PSF only

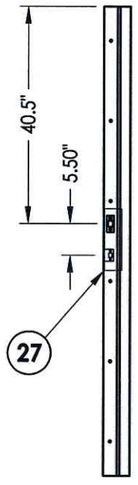

STRIKE JAMB

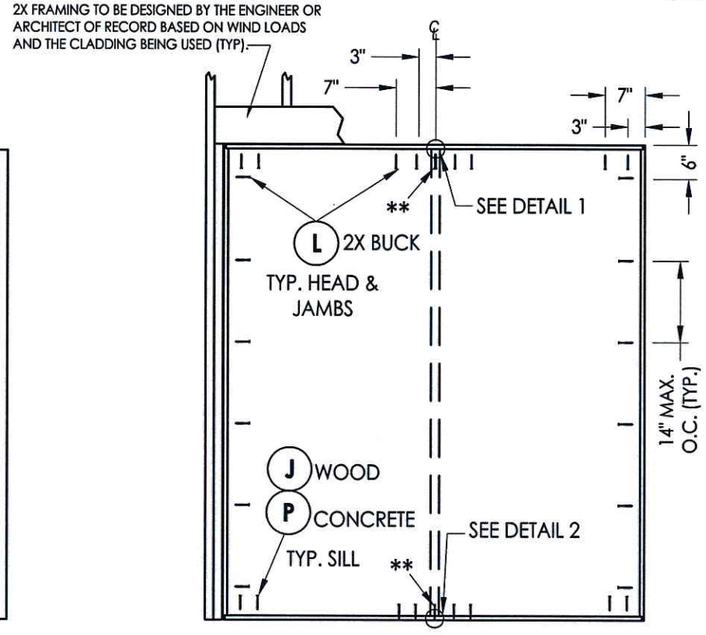

FRAME ANCHORING
XX

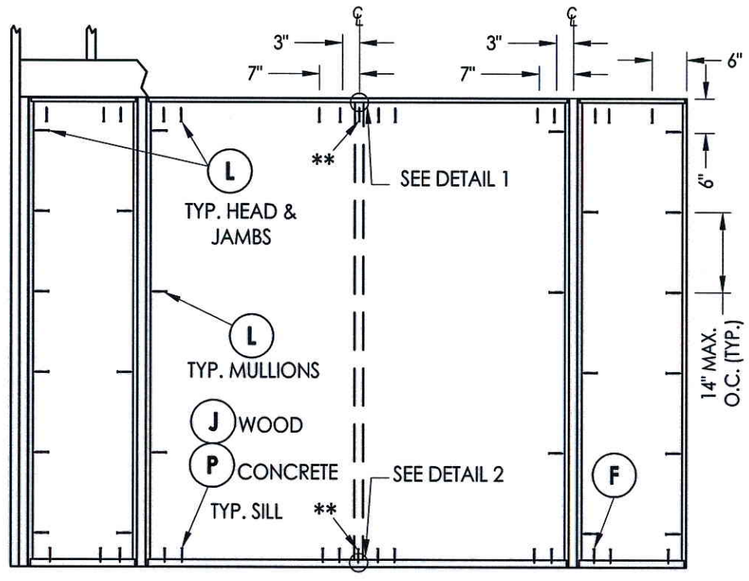

FRAME ANCHORING
OXXO

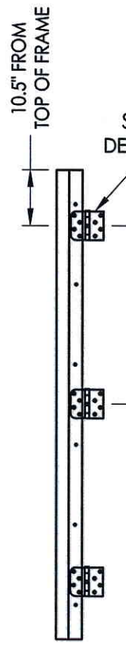

HINGE JAMB

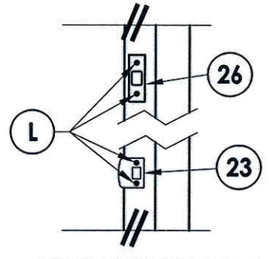

LATCH & DEADBOLT DETAIL
Standard Strike

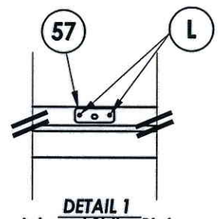

DETAIL 1
Astragal Strike Plate

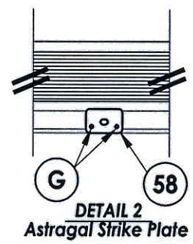

DETAIL 2
Astragal Strike Plate

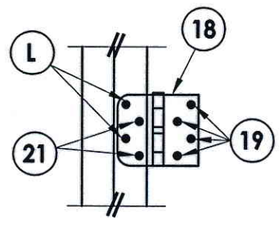

HINGE DETAIL

Documents Prepared By: Lyndon F. Schmidt, P.E.
TEXAS P.E. #104123

R|W BUILDING CONSULTANTS, INC.
P.O. Box 230 Valrico FL 33595
Phone No.: 813.659.9197

TEXAS BOARD OF PROFESSIONAL ENGINEERS
CERTIFICATE OF REGISTRATION # F-11852

STATE OF TEXAS
LYNDON F SCHMIDT
104123
LICENSED PROFESSIONAL ENGINEER

PRODUCT: *TAYLOR FIBERGLASS DOOR*

PART OR ASSEMBLY: *FRAME ANCHORING*

NO.	DATE	BY
REVISIONS		

DATE: 10/01/12
SCALE: N.T.S.
DWG. BY: JK
CHK. BY: LFS
DRAWING NO.: TX-4255
SHEET 8 OF 9

© 2012 R.W. BUILDING CONSULTANTS INC.

R:\A - Projects\Project Folders\Proj 1601 - 1700\PF 1673\D. RWBC Drawings\Texas 2012\TX-4254-55.dwg, 8 (2)

BILL OF MATERIALS

ITEM #	DESCRIPTION	MATERIAL
B	2X FRAMING (G >= 0.42)	WOOD
C	1/4" MAX. SHIM SPACE	-
J	#10 X 3" PFH WOOD SCREW	STEEL
L	#10 X 2-1/2" PFH WOOD SCREW	STEEL
P	1/4" PFH ELCO OR ITW CONCRETE SCREW (1-3/4" MIN. EMBEDMENT)	STEEL
1	JAMB - FINGERJOINT PINE	WOOD
2	JAMB - POLY FIBER	POLY FIBER
6	2X MULLION (G > = 0.55)	WOOD
7	WEATHERSTRIP	FOAM
8	DOOR BOTTOM SWEEP	VINYL
18	4" X 4" HINGE	STEEL
19	#10 X 3/4" PFH WS	STEEL
20	1" BRAD NAIL	STEEL
21	#10 X 3/4" PFH WS (Wood Jamb) #10-24 X 5/8" M.S. W/ 1/2" STAFAST INSERT P/N D102413 (Wood or Poly Fiber Jamb) #10-24 X 5/8" M.S. w/ 3/8" STAFAST PRONG TEE NUT (Wood or Poly Fiber Jamb)	STEEL
23	LATCH STRIKE PLATE	STEEL
25	#8 X 2-1/2" PFH WOOD SCREW	STEEL
26	DEADBOLT STRIKE PLATE (SECURITY)	STEEL
27	REINFORCEMENT PLATE	STEEL
30	INSWING THRESHOLD	ALUM/COMP
33	ADA THRESHOLD	ALUM
35	SIDELITE ADAPTER	VINYL
40	DOOR PANEL - SEE DOOR PANEL DETAIL SHEET FOR CONSTRUCTION DETAILS	-
50	SIDELITE PANEL - SEE SIDELITE PANEL DETAIL SHEET FOR CONSTRUCTION DETAILS	-
55	SIDELITE TRIM	WOOD
56	ASTRAGAL (IMPERIAL)	ALUM
57	ASTRAGAL STRIKE PLATE (@ HEAD)	STEEL
58	ASTRAGAL STRIKE PLATE (@ SILL)	STEEL

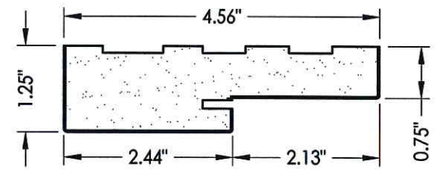

1 POLY FIBER JAMB

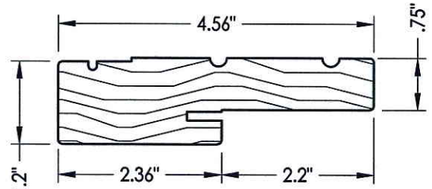

2 WOOD JAMB

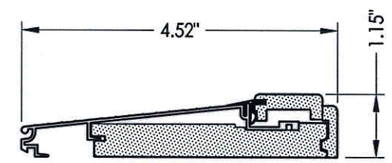

30 INSWING THRESHOLD
By Imperial

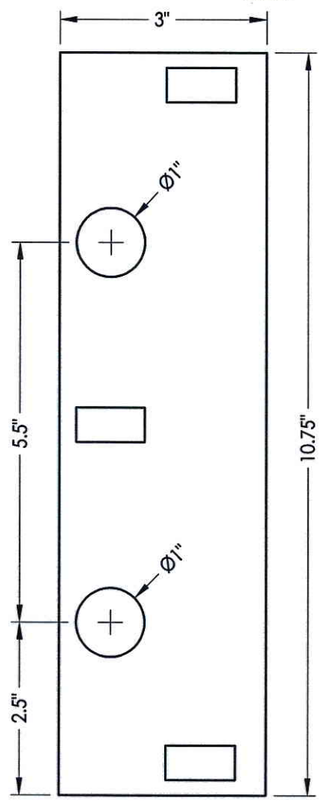

27 REINFORCEMENT PLATE
16 GA.

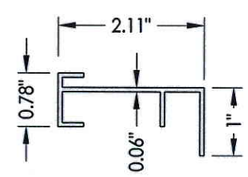

35 SIDELITE ADAPTER

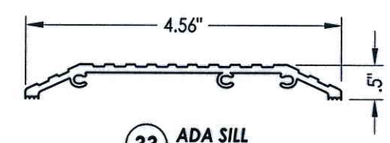

33 ADA SILL

CONCRETE ANCHOR NOTES:

1. Concrete anchor locations at the corners may be adjusted to maintain the min. edge distance to mortar joints.
2. Concrete anchor locations noted as "MAX. ON CENTER" must be adjusted to maintain the min. edge distance to mortar joints, additional concrete anchors may be required to ensure the "MAX. ON CENTER" dimension are not exceeded.
3. Concrete anchor table:

ANCHOR TYPE	ANCHOR SIZE	MIN. EMBEDMENT	MIN. CLEARANCE TO MASONRY EDGE	MIN. CLEARANCE TO ADJACENT ANCHOR
ITW TAPCON®	1/4"	1-3/4"	2-1/2"	3"
ELCO ULTRACON®	1/4"	1-3/4"	1"	3"

STATE OF TEXAS
LYNDON F. SCHMIDT
104123
LICENSED PROFESSIONAL ENGINEER
2.18.13

Documents Prepared By: Lyndon F. Schmidt, P.E.
TEXAS P.E. #104123

RW BUILDING CONSULTANTS, INC.
P.O. Box 230 Valrico FL. 33595
Phone No.: 813.659.9197

TEXAS BOARD OF PROFESSIONAL ENGINEERS
CERTIFICATE OF REGISTRATION # F-11852

PRODUCT: TAYLOR FIBERGLASS DOOR

PART OR ASSEMBLY: BILL OF MATERIALS AND COMPONENTS

NO.	DATE	REVISIONS	BY

DATE: 10/01/12
SCALE: N.T.S.
DWG. BY: JK
CHK. BY: LFS
DRAWING NO.: TX-4255
SHEET 9 OF 9

© 2012 R.W. BUILDING CONSULTANTS INC.

R:\A - Projects\Project Folders\Proj 1601 - 1700\PF 1673\D. RWBC Drawings\Texas 2012\TX-4254-55.dwg, 9 (2)