215 EAST ROOSEVELT AVE.
ZEELAND, MI 49464

Distributed by: McCoy's Building Supply
1350 I.H. 35 North
San Marcos, TX 78677

FIBERGLASS ENTRY DOOR
INSWING / OUTSWING
"IMPACT"

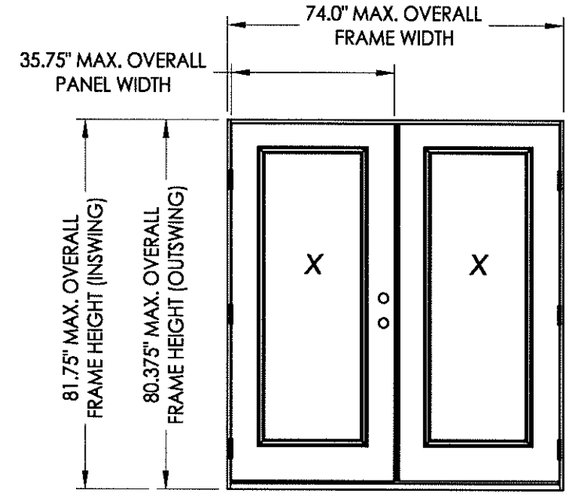

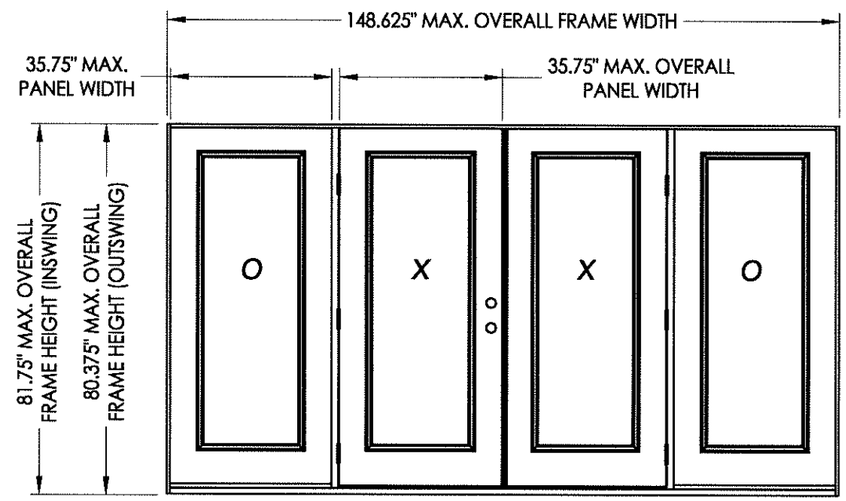

EVALUATED FOR USE IN THE STATE OF TEXAS

The Fiberglass Glazed Door described herein complies with the 2006 International Residential Code (IRC), Sections R301 & R613 and the 2006 International Building Code (IBC), Sections 1405.12, 1609, 1714.5, 2403 and 2404 (including Texas revisions) subject to the following conditions:

1. Anchors shall be as listed and spaced as shown in the details. Anchor embedment to base material shall be beyond wall dressing or stucco.
2. This system has been tested and evaluated as a large missile impact protective system for installation in the Seaward, Inland I and Inland II areas. This product meets missile level "D" as defined in ASTM E 1996.
3. Allowable design pressure requirements must be equal to or less than the design pressure rating shown in the design pressure chart, sheet 1 of this drawing.
4. Conditions not covered by this drawing are subject to further engineering analysis.

TABLE OF CONTENTS

SHEET #	DESCRIPTION
1	Typical elevations, design pressures & general notes
2	Door panel details
3	Sidelite panel details
4	Lite frame and glazing details
5	Elevations
6	Horizontal cross sections
7	Vertical cross sections
8	Vertical cross sections
9	Frame anchoring
10	Astragal details
11	Bill of materials & components

CONFIGURATION	MAX. FRAME DIMENSION	DESIGN PRESSURE (PSF) INSWING		DESIGN PRESSURE (PSF) OUTSWING	
		POSITIVE	NEGATIVE	POSITIVE	NEGATIVE
XX	74.0" x 81.75"	+50.0	-50.0	+50.0	-50.0
OXXO	148.625" x 81.75"	+50.0	-50.0	+50.0	-50.0

STATE OF TEXAS
LYNDON F. SCHMIDT
104123
LICENSED PROFESSIONAL ENGINEER

Documents Prepared By: Lyndon F. Schmidt, P.E.
TEXAS P.E. #104123
RW BUILDING CONSULTANTS, INC.
P.O. Box 230 Valrico FL 33595
Phone No.: 813.659.9197
TEXAS BOARD OF PROFESSIONAL ENGINEERS
CERTIFICATE OF REGISTRATION # F-11852

PRODUCT: FIBERGLASS DOOR
PART OR ASSEMBLY: TYPICAL ELEVATION, DESIGN PRESSURES & GENERAL NOTES

NO.	DATE	REVISIONS	BY

DATE: 06/20/12
SCALE: N.T.S.
DWG. BY: JK
CHK. BY: LFS
DRAWING NO.: TX-4170
SHEET 1 OF 11

© 2012 R.W. BUILDING CONSULTANTS INC.

R:\A - Projects\Project Folders\Proj 1601 - 1700\PF 1676\D. RWBC Drawings\TX-4168-70.dwg, TX-4170

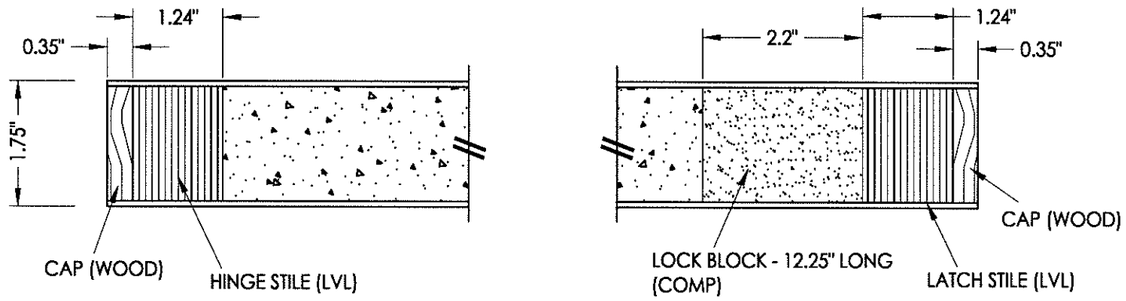

1/2 **HORIZONTAL CROSS SECTION**

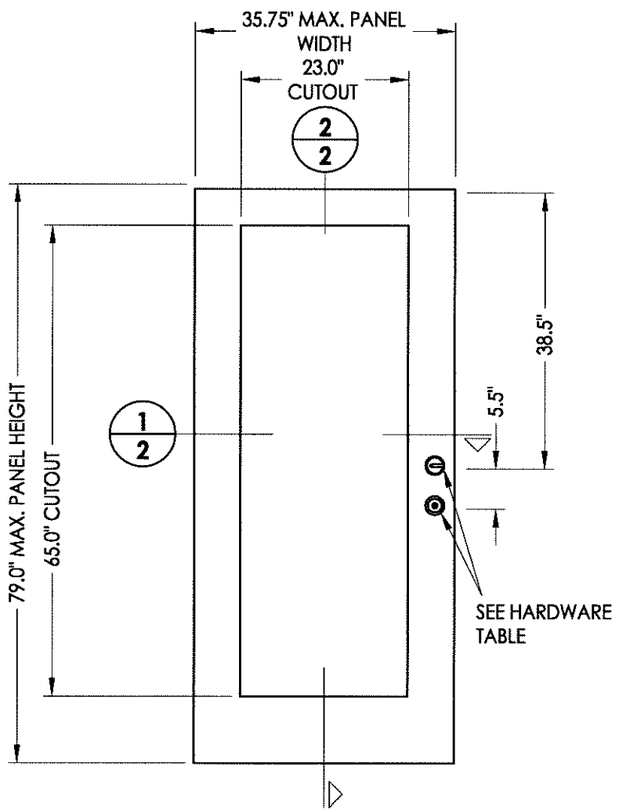

40 **DOOR PANEL**
Masonite

HARDWARE TABLE		
MANUFACTURER	MODEL	
KWIKSET	KNOB: DEADBOLT:	SIGNATURE SERIES SIGNATURE SERIES (980)
SCHLAGE	KNOB: DEADBOLT:	"F" SERIES (F60) "B" SERIES (B60/62)

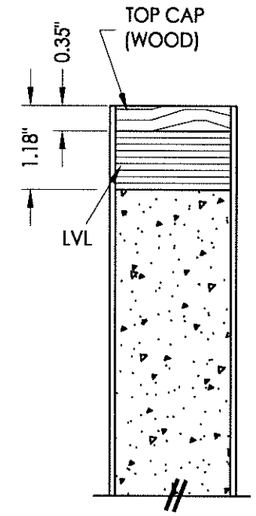

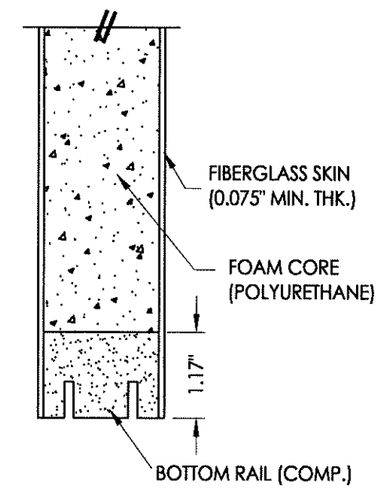

2/2 **VERTICAL CROSS SECTION**

STATE OF TEXAS
LYNDON F. SCHMIDT
104123
LICENSED
PROFESSIONAL ENGINEER

Documents Prepared By: Lyndon F. Schmidt, P.E.
TEXAS P.E. #104123

RW BUILDING CONSULTANTS, INC.
P.O. Box 230 Valrico FL 33595
Phone No.: 813.859.9197

TEXAS BOARD OF PROFESSIONAL ENGINEERS
CERTIFICATE OF REGISTRATION # F-11852

PRODUCT: FIBERGLASS DOOR

PART OR ASSEMBLY: DOOR PANEL DETAILS

NO.	DATE	BY

REVISIONS

DATE: 06/20/12
SCALE: N.T.S.
DWG. BY: JK
CHK. BY: LFS
DRAWING NO.: TX-4170
SHEET 2 OF 11

© 2012 R.W. BUILDING CONSULTANTS INC.

R:\A - Projects\Project Folders\Proj 1601 - 1700\PF 1676\D. RWBC Drawings\TX-4168-70.dwg, 2.6

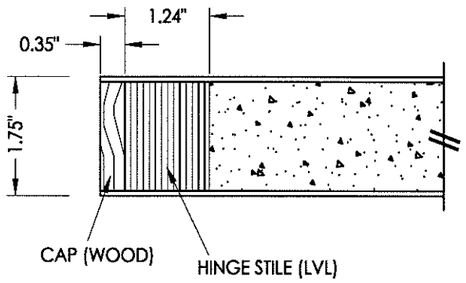

1/3 **HORIZONTAL CROSS SECTION**

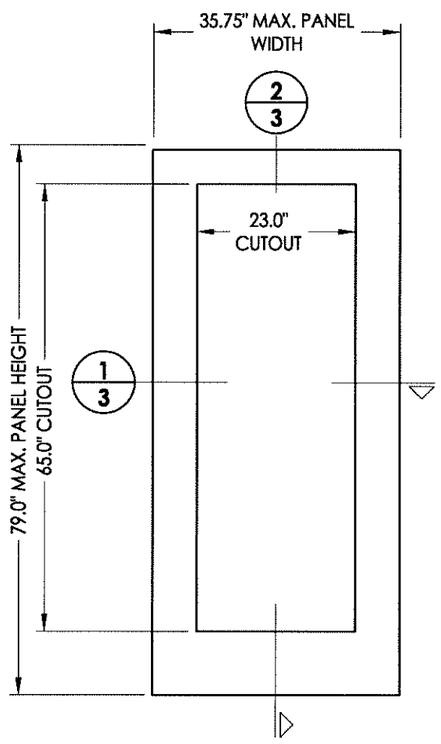

50 **SIDELITE PANEL (36" NOM.)**
Masonite

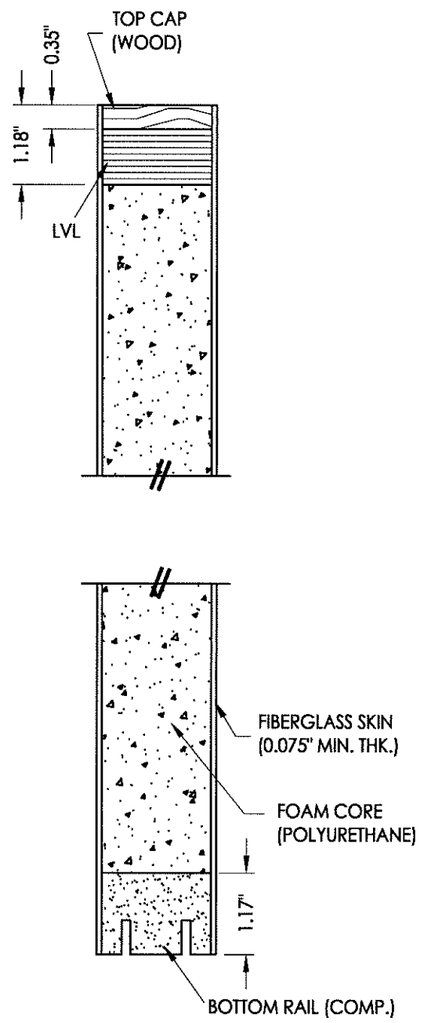

2/3 **VERTICAL CROSS SECTION**

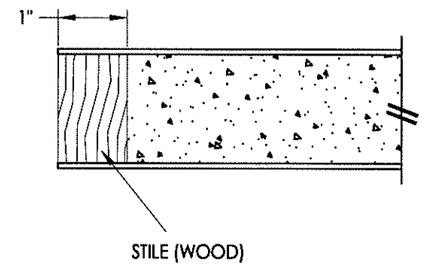

3/3 **HORIZONTAL CROSS SECTION**

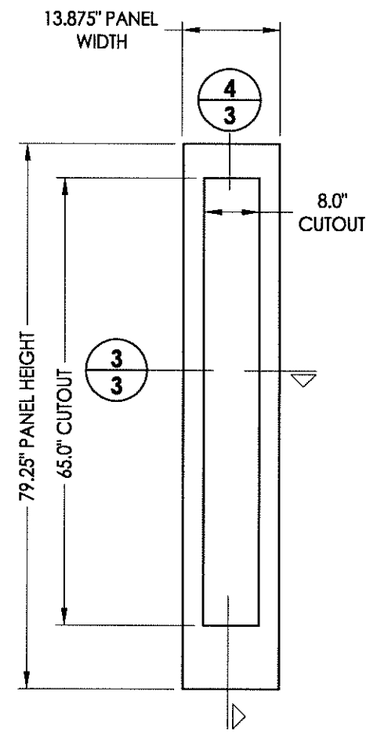

51 **SIDELITE PANEL (14" NOM.)**
Masonite

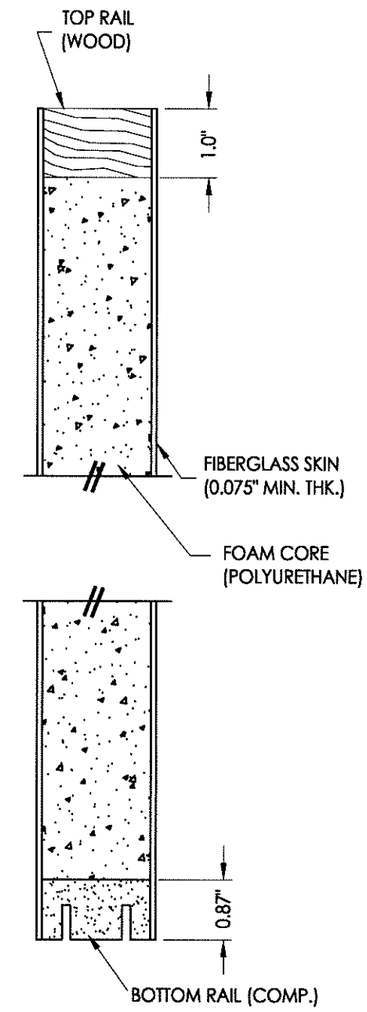

4/3 **VERTICAL CROSS SECTION**

STATE OF TEXAS
LYNDON F. SCHMIDT
104123
LICENSED PROFESSIONAL ENGINEER

Documents Prepared By: Lyndon F. Schmidt, P.E.
TEXAS P.E. #104123

RW BUILDING CONSULTANTS, INC.
P.O. Box 230 Valrico FL. 33595
Phone No.: 813.659.9197

TEXAS BOARD OF PROFESSIONAL ENGINEERS
CERTIFICATE OF REGISTRATION # F-11852

PRODUCT: FIBERGLASS DOOR

PART OR ASSEMBLY: SIDELITE PANEL DETAILS

NO.	DATE	REVISIONS	BY

DATE: 06/20/12
SCALE: N.T.S.
DWG. BY: JK
CHK. BY: LFS
DRAWING NO.: TX-4170
SHEET 3 OF 11

© 2012 R.W. BUILDING CONSULTANTS INC.

R:\A - Projects\Project Folders\Proj 1601 - 1700\PF 1676\D. RWBC Drawings\TX-4168-70.dwg, 3.6

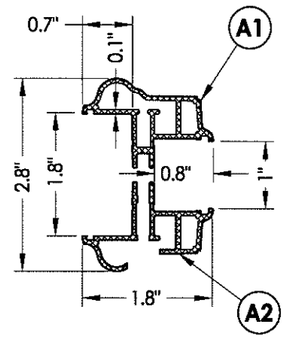

ODL LITE FRAME CROSS SECTION

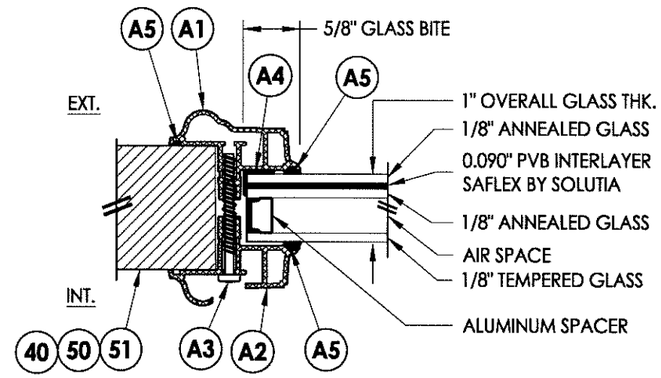

G1 GLAZING DETAIL

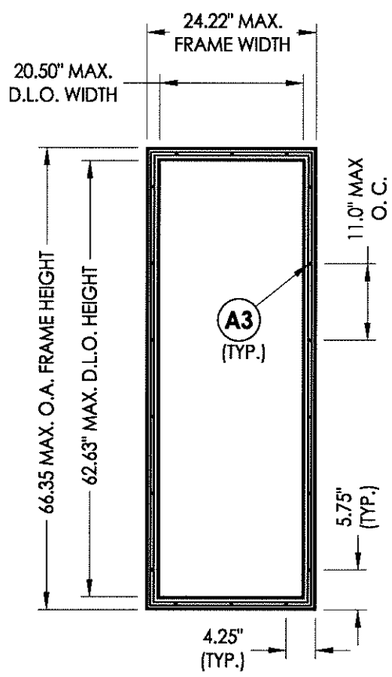

ODL LITE FRAME

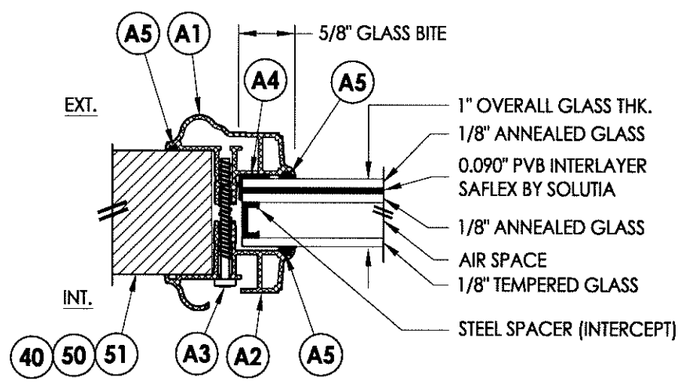

G2 GLAZING DETAIL

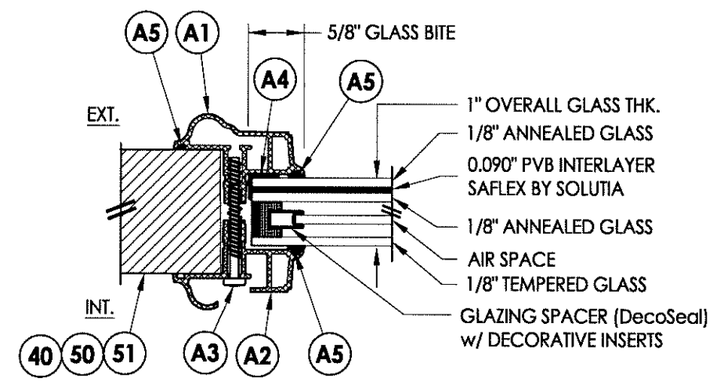

G3 GLAZING DETAIL

BILL OF MATERIALS (LITE FRAME & GLAZING DETAILS)		
ITEM #	DESCRIPTION	MATERIAL
A1	EXTERIOR FRAME	ALUM.
A2	INTERIOR FRAME	ALUM.
A3	#7-19 X 1-3/4" PPH SELF-DRILLING SMS	STEEL
A4	DOW 995 STRUCTURAL SILICONE	SILICONE
A5	NON STRUCTURAL BACKBEDDING SEALANT (READISEAL)	-

STATE OF TEXAS
LYNDON F. SCHMIDT
104123
LICENSED PROFESSIONAL ENGINEER

Documents Prepared By: Lyndon F. Schmidt, P.E.
TEXAS P.E. #104123

RW BUILDING CONSULTANTS, INC.
P.O. Box 230 Valrico FL 33595
Phone No.: 813.659.9197

TEXAS BOARD OF PROFESSIONAL ENGINEERS
CERTIFICATE OF REGISTRATION # F-11852

PRODUCT: FIBERGLASS DOOR

PART OR ASSEMBLY: LITE FRAME & GLAZING DETAILS

NO.	DATE	BY

REVISIONS

DATE: 06/20/12
SCALE: N.T.S.
DWG. BY: JK
CHK. BY: LFS
DRAWING NO.: TX-4170
SHEET 4 OF 11

© 2012 R.W. BUILDING CONSULTANTS INC.

R:\A - Projects\Project Folders\Proj 1601 - 1700\PF 1676\D. RWBC Drawings\TX-4168-70.dwg, 4.6

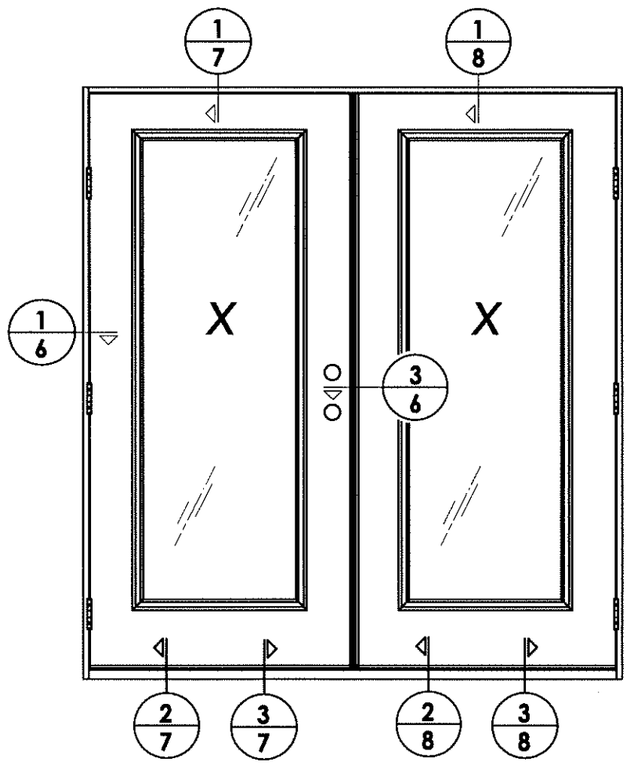

ELEVATION (XX)

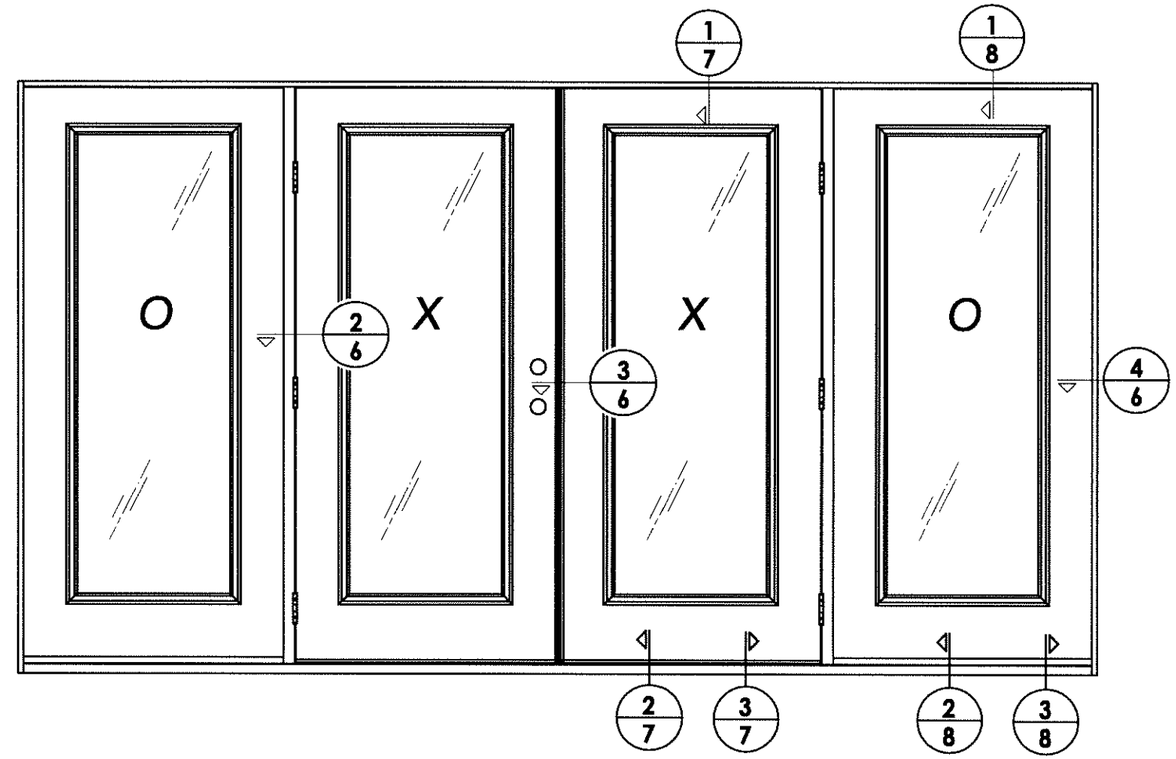

ELEVATION (OXXO)

STATE OF TEXAS
LYNDON F SCHMIDT
104123
LICENSED
PROFESSIONAL ENGINEER

Documents Prepared By: Lyndon F. Schmidt, P.E.
TEXAS P.E. #104123

RW BUILDING CONSULTANTS, INC.
P.O. Box 230 Valrico FL. 33595
Phone No.: 813.659.9197

TEXAS BOARD OF PROFESSIONAL ENGINEERS
CERTIFICATE OF REGISTRATION # F-11852

PRODUCT: FIBERGLASS DOOR

PART OR ASSEMBLY: ELEVATIONS

NO.	DATE	REVISIONS	BY

DATE: 06/20/12
SCALE: N.T.S.
DWG. BY: JK
CHK. BY: LFS
DRAWING NO.: TX-4170
SHEET 5 OF 11

© 2012 R.W. BUILDING CONSULTANTS INC.

R:\A - Projects\Project Folders\Proj 1601 - 1700\PF 1676\D. RWBC Drawings\TX-4168-70.dwg, 5.6

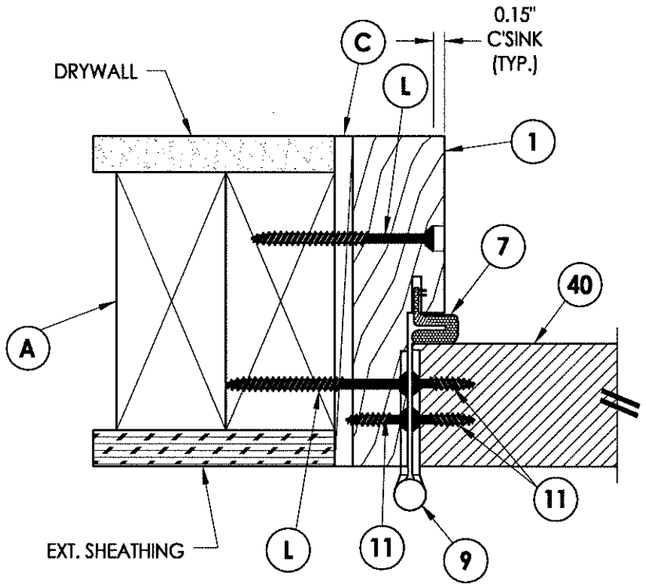

1/6 HORIZONTAL CROSS SECTION
Outswing shown - Inswing also approved

INTERIOR

EXTERIOR

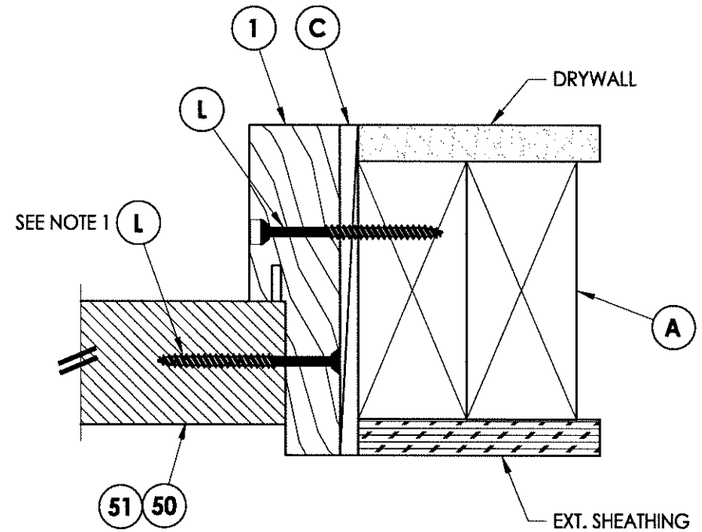

4/6 HORIZONTAL CROSS SECTION
Outswing shown - Inswing also approved

NOTE:
1. Sidelite panel screws located 6" from each end and equally spaced (4 screws total)

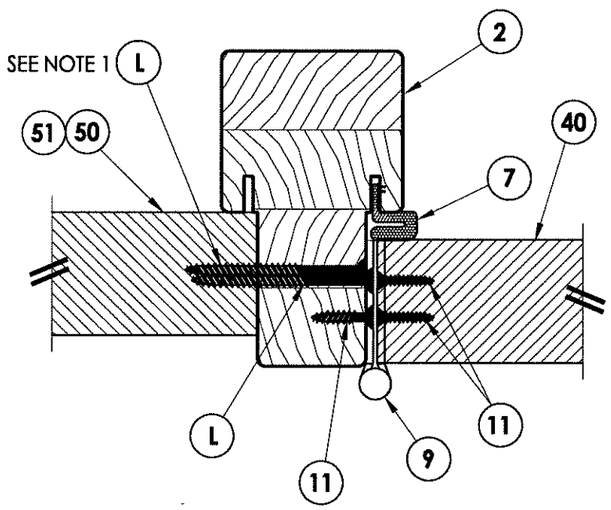

2/6 HORIZONTAL CROSS SECTION
Outswing shown - Inswing also approved

INTERIOR

EXTERIOR

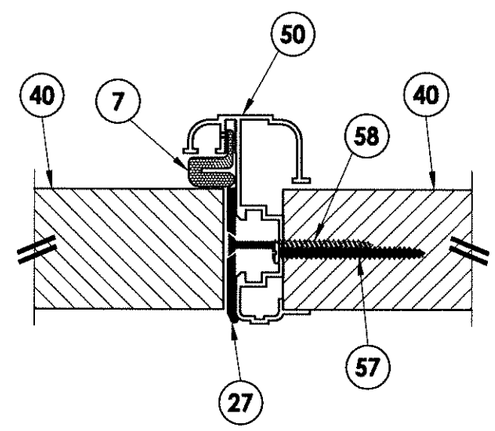

3/6 HORIZONTAL CROSS SECTION
Outswing shown - Inswing also approved

STATE OF TEXAS
LYNDON F. SCHMIDT
104123
LICENSED PROFESSIONAL ENGINEER

Documents Prepared By: Lyndon F. Schmidt, P.E.
TEXAS P.E. #104123

RW BUILDING CONSULTANTS, INC.
P.O. Box 230 Valrico FL. 33595
Phone No.: 813.659.9197

TEXAS BOARD OF PROFESSIONAL ENGINEERS
CERTIFICATE OF REGISTRATION # F-11852

PRODUCT: FIBERGLASS DOOR

PART OR ASSEMBLY: HORIZONTAL CROSS SECTIONS

REVISIONS

NO.	DATE	BY

DATE: 06/20/12
SCALE: N.T.S.
DWG. BY: JK
CHK. BY: LFS
DRAWING NO.: TX-4170
SHEET 6 OF 11

© 2012 R.W. BUILDING CONSULTANTS INC.

R:\A - Projects\Project Folders\Proj 1601 - 1700\PF 1676\D. RWBC Drawings\TX-4168-70.dwg, 6.6

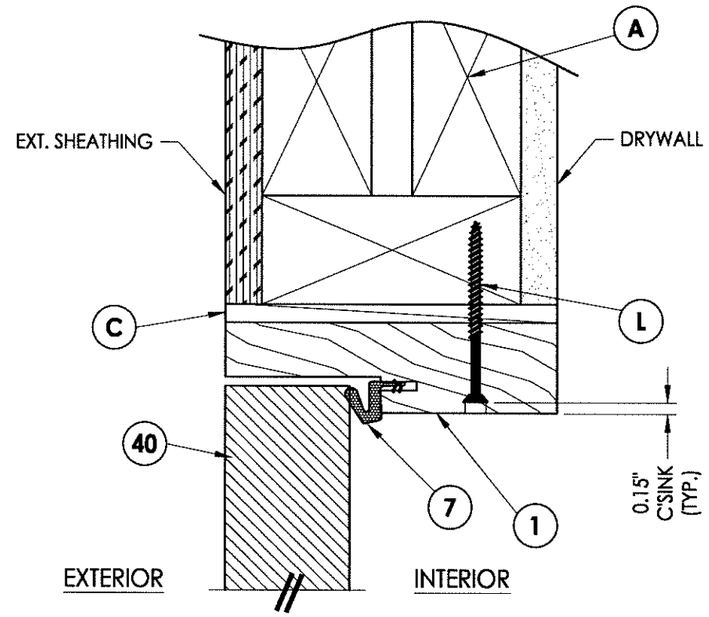

1/7 VERTICAL CROSS SECTION
Outswing shown - inswing also approved

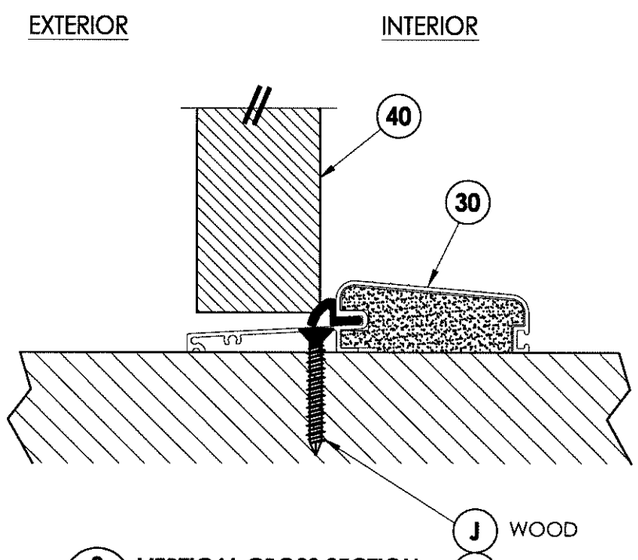

2/7 VERTICAL CROSS SECTION
Outswing confirguration

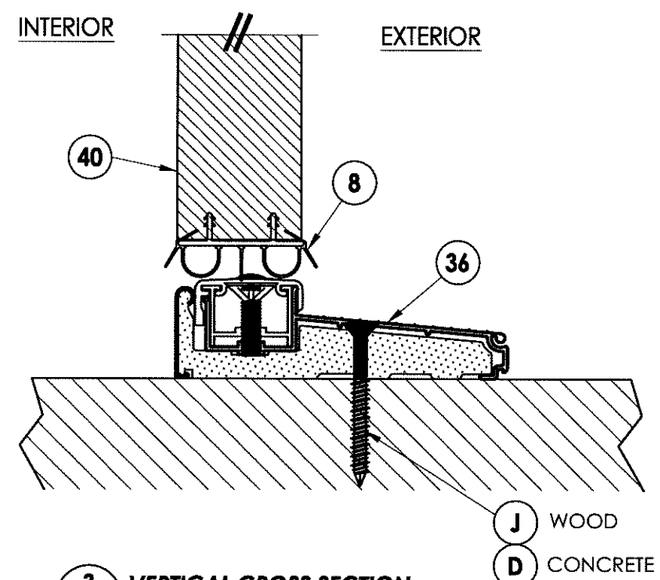

3/7 VERTICAL CROSS SECTION
Inswing configuration

STATE OF TEXAS
LYNDON F. SCHMIDT
104123
LICENSED PROFESSIONAL ENGINEER

Documents Prepared By: Lyndon F. Schmidt, P.E.
TEXAS P.E. #104123

RW BUILDING CONSULTANTS, INC.
P.O. Box 230 Valrico FL. 33595
Phone No.: 813.659.9197

TEXAS BOARD OF PROFESSIONAL ENGINEERS
CERTIFICATE OF REGISTRATION # F-11852

PRODUCT: FIBERGLASS DOOR

PART OR ASSEMBLY: VERTICAL CROSS SECTIONS

NO.	DATE	REVISIONS	BY

DATE: 06/20/12
SCALE: N.T.S.
DWG. BY: JK
CHK. BY: LFS
DRAWING NO.: TX-4170
SHEET 7 OF 11

© 2012 R.W. BUILDING CONSULTANTS INC.

R:\A - Projects\Project Folders\Proj 1601 - 1700\PF 1676\D. RWBC Drawings\TX-4168-70.dwg, 7.6

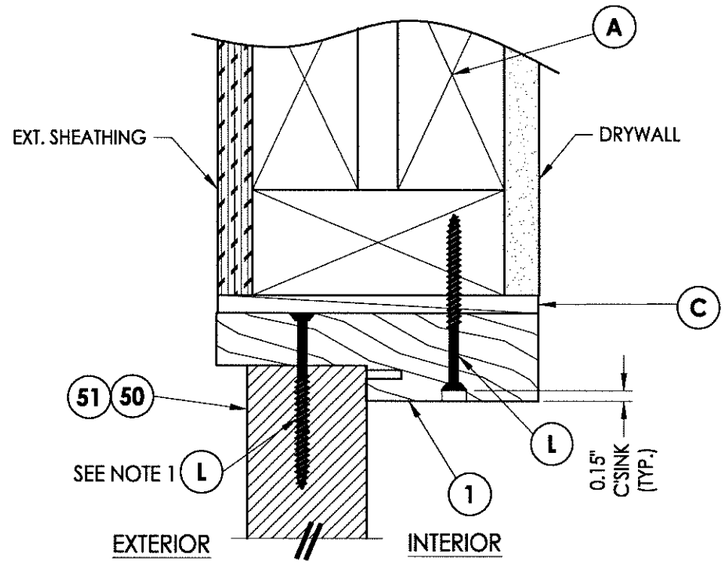

1/8 VERTICAL CROSS SECTION
Outswing shown - Inswing also approved

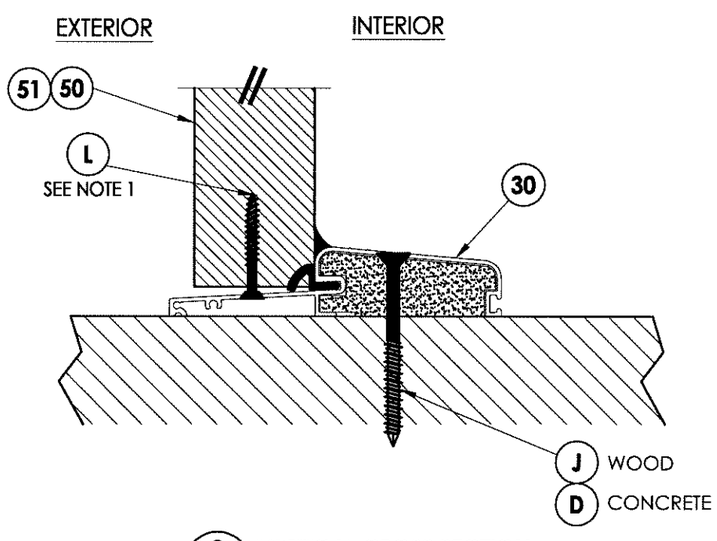

2/8 VERTICAL CROSS SECTION
Outswing shown

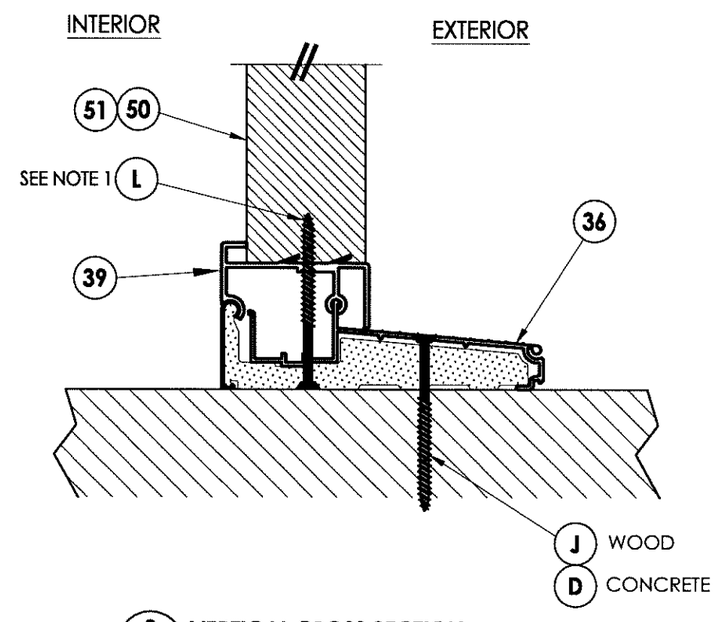

3/8 VERTICAL CROSS SECTION
Inswing shown

NOTE:
1. Sidelite panel screws located 3" from each end (2 Total). Not required for Sidelites less than 14" in width.

STATE OF TEXAS
LYNDON F. SCHMIDT
104123
LICENSED PROFESSIONAL ENGINEER

Documents Prepared By: Lyndon F. Schmidt, P.E.
TEXAS P.E. #104123
RW BUILDING CONSULTANTS, INC.
P.O. Box 230 Valrico FL, 33595
Phone No.: 813.659.9197
TEXAS BOARD OF PROFESSIONAL ENGINEERS
CERTIFICATE OF REGISTRATION # F-11852

PRODUCT: FIBERGLASS DOOR

PART OR ASSEMBLY: VERTICAL CROSS SECTIONS

NO.	DATE	REVISIONS	BY

DATE: 06/20/12
SCALE: N.T.S.
DWG. BY: JK
CHK. BY: LFS
DRAWING NO.: TX-4170
SHEET 8 OF 11

© 2012 R.W. BUILDING CONSULTANTS INC.

R:\A - Projects\Project Folders\Proj 1601 - 1700\PF 1676\D. RWBC Drawings\TX-4168-70.dwg, 8.6

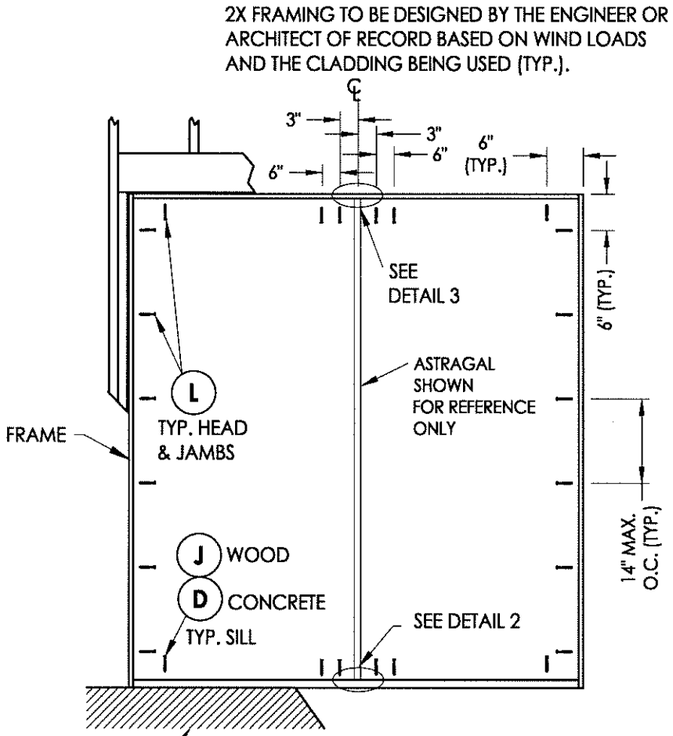

FRAME ANCHORING
XX

FLOOR SUBSTRATE MATERIAL (TYP.)
CONCRETE (MIN. 3000 PSI)
WOOD (G >= 0.42)

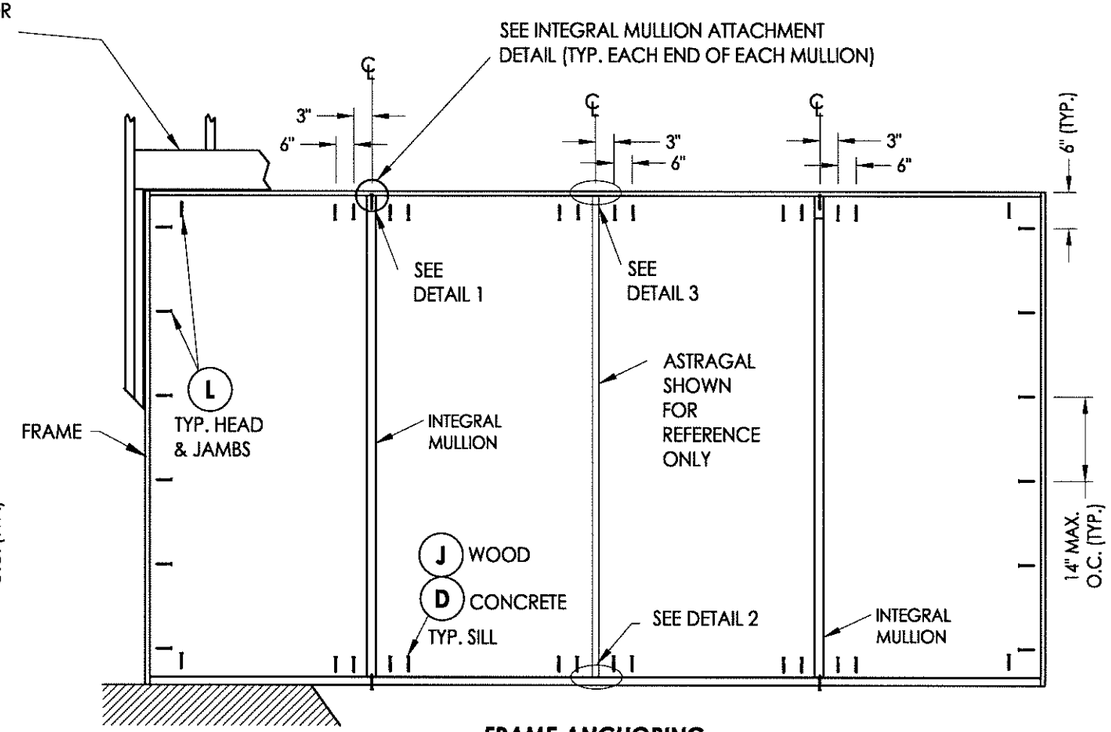

FRAME ANCHORING
OXXO

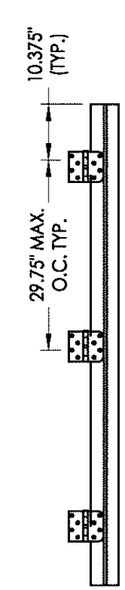

HINGE LOCATIONS

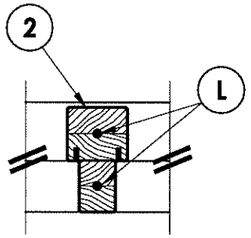

DETAIL 1
INTEGRAL MULLION ATTACHMENT

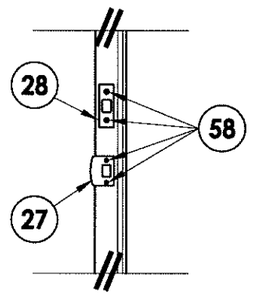

LATCH & DEAD BOLT DETAIL
Kwikset/Schlage

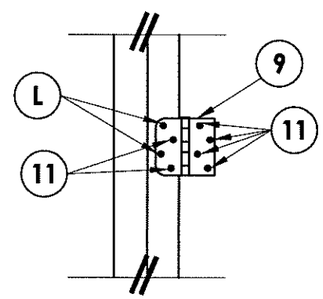

HINGE DETAIL
Inswing

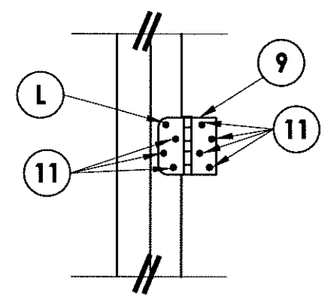

HINGE DETAIL
Outswing

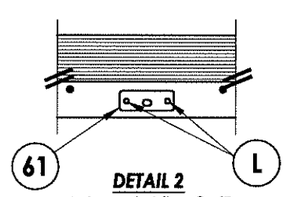

DETAIL 2
Astragal strike @ sill
(Outswing)

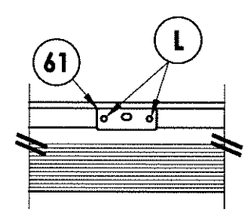

DETAIL 2
Astragal strike @ sill
(Inswing)

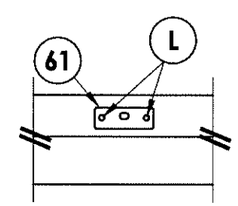

DETAIL 3
Astragal strike @ head

CONCRETE ANCHOR NOTES:

1. *Concrete anchor locations at the corners may be adjusted to maintain the min. edge distance to mortar joints.*
2. *Concrete anchor locations noted as "MAX. ON CENTER" must be adjusted to maintain the min. edge distance to mortar joints, additional concrete anchors may be required to ensure the "MAX. ON CENTER" dimension are not exceeded.*

Concrete anchor table:

ANCHOR TYPE	ANCHOR SIZE	MIN. EMBEDMENT	MIN. CLEARANCE TO MASONRY EDGE	MIN. CLEARANCE TO ADJACENT ANCHOR
ITW TAPCON®	1/4"	1-1/4"	2-1/2"	3"

STATE OF TEXAS
LYNDON F. SCHMIDT
104123
LICENSED
PROFESSIONAL ENGINEER

Documents Prepared By: Lyndon F. Schmidt, P.E.
TEXAS P.E. #104123
RW BUILDING CONSULTANTS, INC.
P.O. Box 230 Valrico FL. 33595
Phone No.: 813.659.9197
TEXAS BOARD OF PROFESSIONAL ENGINEERS
CERTIFICATE OF REGISTRATION # F-11852

PRODUCT: *FIBERGLASS DOOR*

PART OR ASSEMBLY: *FRAME ANCHORING*

NO.	DATE	REVISIONS	BY

DATE: 06/20/12
SCALE: N.T.S.
DWG. BY: JK
CHK. BY: LFS
DRAWING NO.: TX-4170
SHEET 9 OF 11

© 2012 R.W. BUILDING CONSULTANTS INC.

R:\A - Projects\Project Folders\Proj 1601 - 1700\PF 1676\D. RWBC Drawings\TX-4168-70.dwg, 9.6

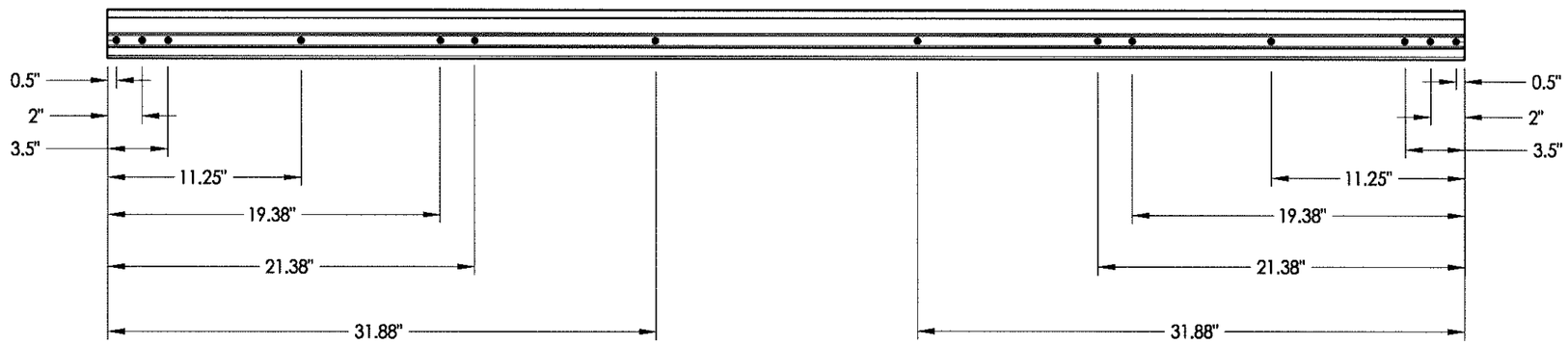

ASTRAGAL SCREW LOCATIONS

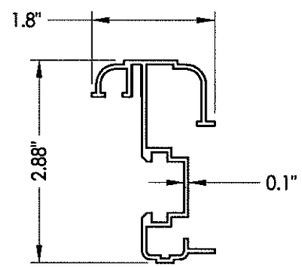

60 ASTRAGAL
DLP

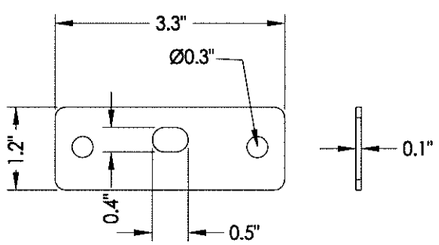

61 ASTRAGAL STRIKE PLATE
Head & sill

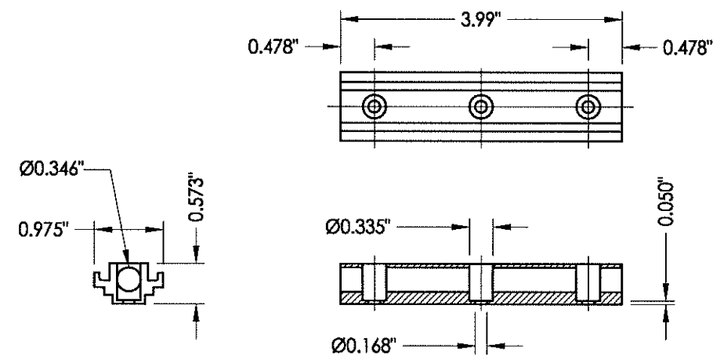

CONCEALED STIFFENER

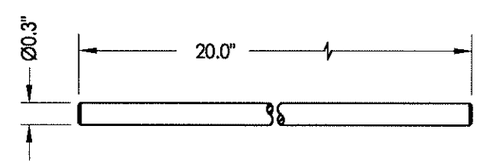

SLIDE BOLT ROD
Typ. top & bottom of astragal
(2" throuw)

STATE OF TEXAS
LYNDON F. SCHMIDT
104123
LICENSED
PROFESSIONAL ENGINEER

Documents Prepared By: Lyndon F. Schmidt, P.E.
TEXAS P.E. #104123
RW BUILDING CONSULTANTS, INC.
P.O. Box 230 Valrico FL. 33595
Phone No.: 813.659.9197
TEXAS BOARD OF PROFESSIONAL ENGINEERS
CERTIFICATE OF REGISTRATION # F-11852

PRODUCT: FIBERGLASS DOOR

PART OR ASSEMBLY: ASTRAGAL DETAILS

NO.	DATE	REVISIONS	BY

DATE: 06/20/12
SCALE: N.T.S.
DWG. BY: JK
CHK. BY: LFS
DRAWING NO.: TX-4170
SHEET 10 OF 11

© 2012 R.W. BUILDING CONSULTANTS INC.

R:\A - Projects\Project Folders\Proj 1601 - 1700\PF 1676\D. RWBC Drawings\TX-4168-70.dwg, 10.6

BILL OF MATERIALS		
ITEM #	DESCRIPTION	MATERIAL
A	2X FRAMING (G >= 0.42)	WOOD
C	1/4" MAX. SHIM SPACE	-
D	1/4" PFH ITW CONCRETE SCREW (1-3/4" MIN. EMB.)	STEEL
J	#10 X 3" PFH WOOD SCREW	STEEL
L	#10 X 2-1/2" PFH WOOD SCREW	STEEL
1	HEAD & JAMB - FINGER-JOINT PINE (G >= 0.42)	WOOD
2	INTEGRAL MULLION - LAMINATED WOOD (G >= 0.42)	WOOD
7	WEATHERSTRIP (Q'LON QEBD-650)	FOAM
8	DOOR BOTTOM SWEEP	VINYL
9	4" X 4" BUTT HINGE	STEEL
11	#9 X 3/4" PFH WOOD SCREW	STEEL
27	LATCH STRIKE PLATE	STEEL
28	DEADBOLT STRIKE PLATE	STEEL
30	OUTSWING THRESHOLD	ALUM/COMP
36	INSWING THRESHOLD	ALUM/COMP
39	SIDELITE SPACER - INSWING	PVC
40	DOOR PANEL - SEE DOOR PANEL DETAIL SHEET FOR DETAILS	-
50	SIDELITE PANEL - SEE SIDELITE PANEL DETAIL SHEET FOR DETAILS	-
51	SIDELITE PANEL - SEE SIDELITE PANEL DETAIL SHEET FOR DETAILS	-
57	#8 X 2" PPH SMS	STEEL
58	#8 X 2-1/2" PFH WOOD SCREW	STEEL
60	ASTRAGAL (DLP)	ALUM
61	ASTRAGAL STRIKE PLATE	STEEL

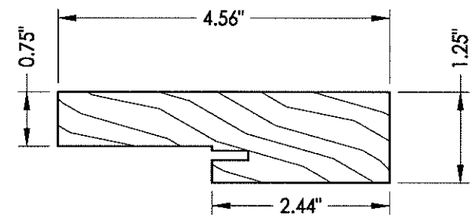

1 **HEAD & JAMB**
Finger joint pine

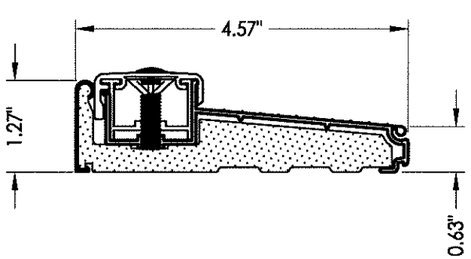

36 **INSWING THRESHOLD**
Columbia 900 Series

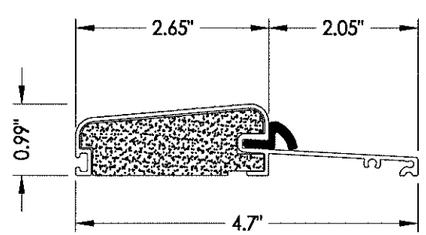

30 **OUTSWING THRESHOLD**
Columbia 775 Series
w/ Composite Substrate

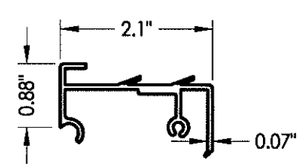

39 **SIDELITE SPACER**
Inswing

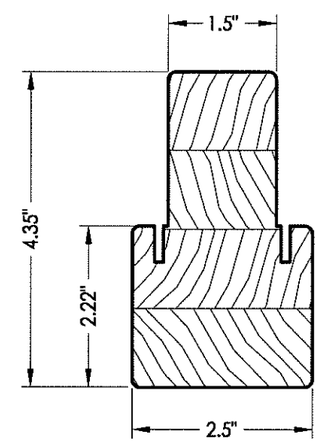

2 **INTEGRAL MULLION**

STATE OF TEXAS
LYNDON F. SCHMIDT
104123
LICENSED
PROFESSIONAL ENGINEER

Documents Prepared By: Lyndon F. Schmidt, P.E.
TEXAS P.E. #104123

RW BUILDING CONSULTANTS, INC.
P.O. Box 230 Valrico FL 33595
Phone No.: 813.659.9197

TEXAS BOARD OF PROFESSIONAL ENGINEERS
CERTIFICATE OF REGISTRATION # F-11852

PRODUCT: FIBERGLASS DOOR

PART OR ASSEMBLY: BILL OF MATERIALS & COMPONENTS

NO.	DATE	REVISIONS	BY

DATE: 06/20/12
SCALE: N.T.S.
DWG. BY: JK
CHK. BY: LFS
DRAWING NO.: TX-4170
SHEET 11 OF 11

© 2012 R.W. BUILDING CONSULTANTS INC.

R:\A - Projects\Project Folders\Proj 1601 - 1700\PF 1676\D. RWBC Drawings\TX-4168-70.dwg, 11.6