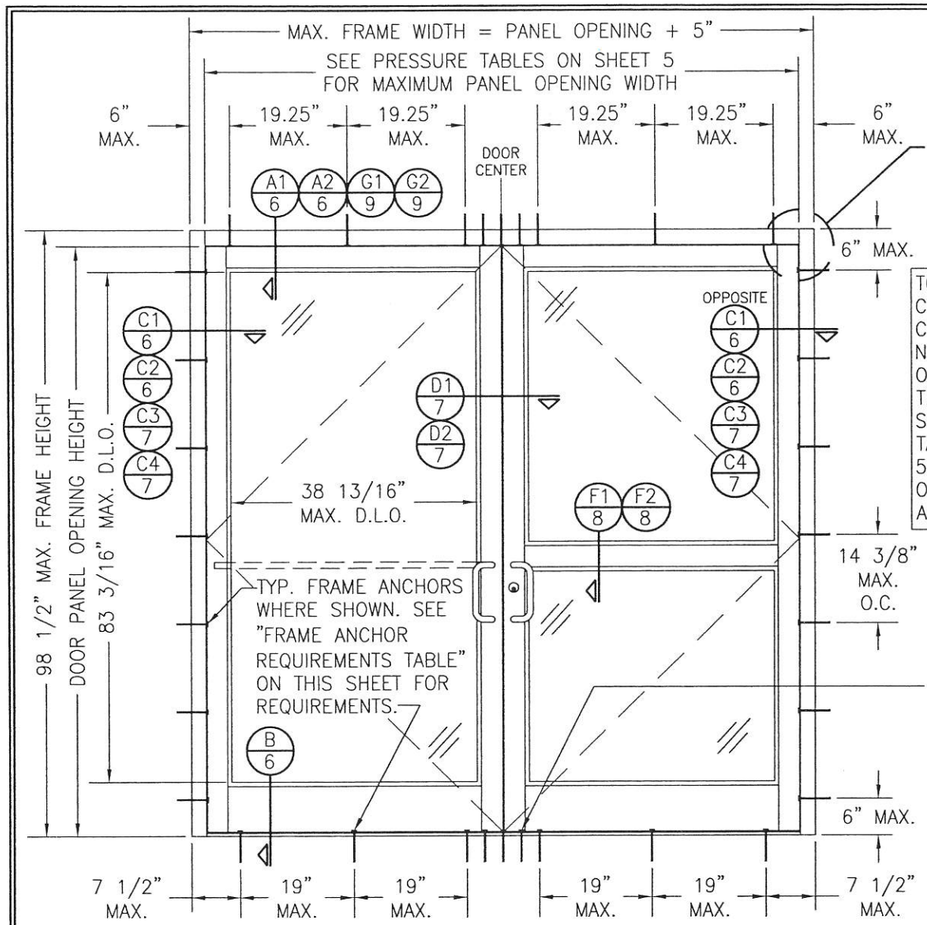

TO AVOID CONFUSION, LOCK CONDITIONS ARE NOT CALLED OUT/SPECIFIED IN THE ELEVATIONS. SEE PRESSURE TABLES ON SHEET 5 & PARTS LIST ON SHEET 13 FOR ALL LOCK OPTIONS.

AT HEAD & SILL, CLUSTER ANCHORS AS SHOWN AT MEETING STILE ENDS SPACED 3" APART. CLUSTER 6 ANCHORS WITH ANCHOR TYPE A; CLUSTER 5 ANCHORS WITH ANCHOR TYPES B, C, D & F (ANCHOR "E" IS NOT APPLICABLE AT HEAD & SILL).

EXTERIOR ELEVATION; DOUBLE DOOR WITH STORE FRONT FRAMING & STANDARD INSTALLATION

SCALE: 1/2" = 1'-0"

(APPLICABLE WITH ALL HINGE TYPES)

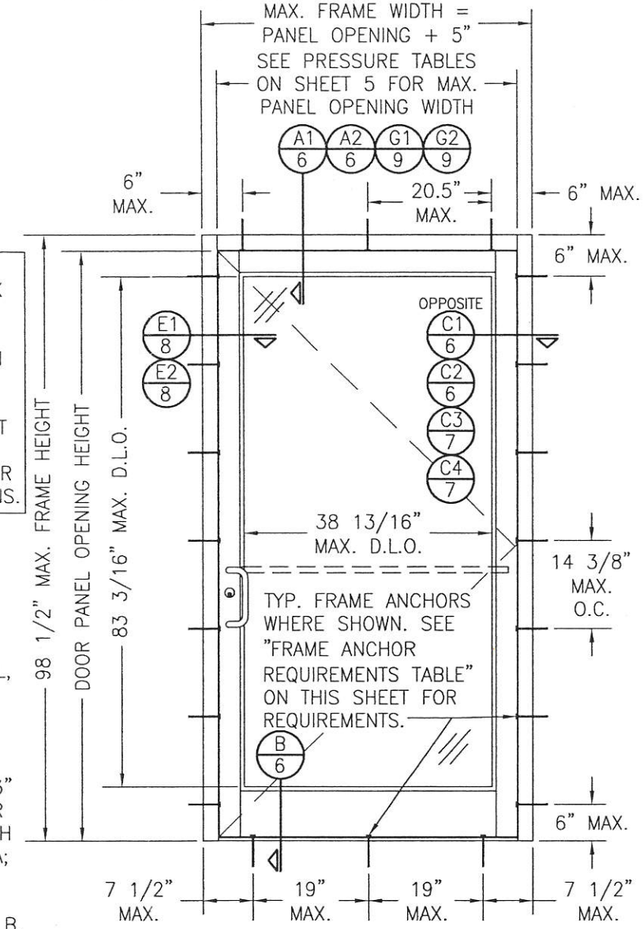

EXTERIOR ELEVATION; SINGLE DOOR WITH STORE FRONT FRAMING & STANDARD INSTALLATION

SCALE: 1/2" = 1'-0"

(APPLICABLE WITH ALL HINGE TYPES)

GENERAL NOTES:

1. THESE DOOR SYSTEMS HAVE BEEN TESTED, ANALYZED & APPROVED FOR DESIGN PRESSURES NOT TO EXCEED THOSE SHOWN IN THE "ALLOWABLE DESIGN PRESSURE TABLE(S).
2. OPENINGS, BUCKING & BUCKING FASTENERS MUST BE PROPERLY DESIGNED & INSTALLED TO TRANSFER WIND LOADS TO THE STRUCTURE.
3. ALL HARDWARE & FASTENERS SHALL BE IN ACCORDANCE WITH THESE DRAWINGS & SHALL NOT VARY UNLESS SPECIFICALLY MENTIONED ON THE DRAWINGS. SPECIFIED ANCHOR EMBED TO BASE MATERIAL SHALL BE BEYOND WALL FINISH OR STUCCO.
4. THE DETAILS & SPECIFICATIONS SHOWN HEREIN REPRESENT THE PRODUCTS TESTED & PROPOSED FOR WATER, AIR, IMPACT, CYCLIC & UNIFORM STATIC AIR PRESSURE TESTING IN CONFORMANCE WITH ASTM E330, E283, E1886 & E1996 & AMMA 1304 FOR LARGE & SMALL MISSILE IMPACT DOORS.
5. THESE DOOR SYSTEMS HAVE BEEN DESIGNED IN ACCORDANCE WITH AND MEET THE REQUIREMENTS OF THE INTERNATIONAL BUILDING CODE (IBC).
6. IMPACT SHUTTERS ARE NOT REQUIRED WITH THESE DOORS.
7. ALL ANCHORS SECURING DOOR FRAME TO PRESSURE TREATED BUCKS OR WOOD FRAMING SHALL BE CAPABLE OF RESISTING CORROSION CAUSED BY THE PRESSURE TREATING CHEMICALS IN THE WOOD.
8. DETERMINE THE POSITIVE & NEGATIVE DESIGN LOADS TO USE WHEN REFERENCING THESE DOCUMENTS IN ACCORDANCE WITH THE GOVERNING CODE AND GOVERNING WIND VELOCITY. FOR WIND LOAD CALCULATIONS IN ACCORDANCE WITH THE INTERNATIONAL BUILDING CODE, A DIRECTIONALITY FACTOR OF KD = 0.85 MAY BE APPLIED PER THE ASCE-7 STANDARD.
9. NO INCREASE IN ALLOWABLE STRESS HAS BEEN USED IN THE CERTIFICATION OF THIS PRODUCT. WIND LOAD DURATION FACTOR CD = 1.6 WAS USED FOR WOOD SCREW ANALYSIS ONLY.
10. MATERIALS, INCLUDING BUT NOT LIMITED TO STEEL SCREWS, THAT COME INTO CONTACT WITH OTHER DISSIMILAR MATERIALS SHALL BE SEPARATED OR COATED AS REQUIRED TO AVOID CORROSION OF EITHER MATERIAL.
11. TO THE BEST OF OUR KNOWLEDGE, THE DOOR SYSTEMS SHOWN HEREIN ARE QUALITY ASSURED BY AN APPROVED CERTIFICATION/QA ENTITY & SHALL BE LABELED IN ACCORDANCE WITH APPLICABLE STANDARDS. THESE DRAWINGS SHOW ALL APPLICABLE ELEVATION, COMBINATION, INSTALLATION & COMPARATIVE ANALYSIS CONDITIONS AS DETERMINED THROUGH TESTING & ENGINEERING RATIONAL ANALYSIS. DOOR ASSEMBLY SHALL BE IN ACCORDANCE WITH THESE DRAWINGS, THE MANUFACTURER'S QUALITY ASSURANCE SPECIFICATIONS & TESTING REPORTS.
12. CERTIFICATION OF THESE DOOR SYSTEMS SHALL BE CONSIDERED VOID IF THEY ARE INSTALLED WITHOUT A BUILDING PERMIT FROM THE APPLICABLE LOCAL BUILDING DEPARTMENT OR IF THEY ARE INSTALLED BY ANYONE OTHER THAN A LICENSED CONTRACTOR EXPERIENCED WITH DOOR INSTALLATIONS.

FRAME ANCHOR REQUIREMENTS TABLE

FRAME & SILL ANCHORS

ANCHOR TYPE	OPENING TYPE (SUBSTRATE)	JAMB TO OPENING FASTENER TYPE	MINIMUM EMBED	MINIMUM EDGE DIST.
A	2X_ WOOD FRAME OR BUCK (MIN. GR. 3 & G=0.55)	NO. 14 SMS SCREW	1 1/4"	3/4"
B	MIN. 16 GA. 50 KSI METAL STUD	(2) NO. 12 SELF DRILL/TAPPING SCREW	FULL	1/2"
C	MIN. 0.22" THICK A36 STEEL	(2) 1/4-20 SELF DRILL/TAPPING SCREW	FULL	1/2"
D	MIN. 3000 P.S.I. CONCRETE	(1) 1/4" CONCRETE SCREW	1 3/4"	2 1/2"
E	MIN. C90 CONCRETE FILLED BLOCK	(1) 1/4" CONCRETE SCREW	1 1/2"	2 1/2"
F	CURTAIN WALL	(2) 1/4-20 SELF DRILL/TAPPING SCREW	FULL	1/2"

(1) CONCRETE SCREWS SHALL BE ELCO ULTRACONS (C.S.), ELCO CRETE-FLEX (S.S.), ITW RAMSET/RED HEAD TAPCONS (C.S. OR S.S.) OR HILTI KWIK-CON II (C.S OR S.S.).

(2) SELF DRILLING & SELF TAPPING SCREWS SHALL BE MIN. GRADE 5 CORROSION RESISTANT STEEL

ALLOWABLE DESIGN PRESSURE

SEE SHEET 5

NOTE: THESE DOORS ARE NOT APPROVED FOR USE WHERE WATER INFILTRATION RESISTANCE IS REQUIRED BY THE DOOR. UNLESS UNITS ARE INSTALLED IN NON-HABITABLE AREAS WHERE THE UNIT & THE AREA ARE DESIGNED TO ACCEPT WATER INFILTRATION, UNITS SHALL BE INSTALLED ONLY AT LOCATIONS PROTECTED BY A CANOPY OR OVERHANG WHERE-BY THE OVERHANG(OH) RATIO IS EQUAL TO OR MORE THAN.

EVALUATION OF THIS PRODUCT IS BASED ON APPLICABLE STANDARDS AND/OR INFORMATION & RESULTS FROM APPLICABLE TEST REPORTS. THE BUILDING CODE VERSION CONSIDERED WITH THIS EVALUATION WAS THAT IN FORCE AT THE TIME OF THE EVALUATION. IN THE EVENT OF CODE VERSION CHANGES/UPDATES OR IN THE EVENT THAT NEW OR ADDITIONAL TESTING IS COMPLETED ON THIS PRODUCT, PRIOR TO STATING CODE COMPLIANCE, THE MANUFACTURER SHALL CONFIRM WITH THE EVALUATION ENGINEER OF RECORD THAT EVERYTHING SPECIFIED HERE-IN IS CURRENT WITH ALL CURRENT TESTING, CODES AND APPLICABLE STANDARDS.

STATE OF TEXAS
WARREN W. SCHAEFER
113497
LICENSED
PROFESSIONAL ENGINEER

THESE DRAWINGS ARE APPLICABLE ONLY TO THE PRODUCT SPECIFIED. THEY MAY NOT BE USED FOR THE ASSEMBLY AND/OR INSTALLATION OF ANY OTHER PRODUCT NOR MAY THEY BE USED FOR RATIONAL AND/OR LOCAL APPROVAL OF ANY PRODUCT NOT PRODUCED BY THE MANUFACTURER STATED ON THESE DRAWINGS.

DRAWN BY: W.R.M.	CHECKED BY: W.W.S.
PLOT: 1=24	DATE: 11/26/13

NO.	REVISION DESCRIPTION	BY	DATE
A1	ADDED LOCK & GLASS OPTIONS	W.W.S.	03/21/16

JOB INFORMATION:
KAWNEER COMPANY, INC.
555 GUTHRIDGE COURT
NORCROSS, GA 30092
770-449-5555

DRAWING TITLE
350IR OUT-SWING IMPACT DOOR

CONSULTANTS
W. W. SCHAEFER ENGINEERING & CONSULTING, P.A. (REG. NO. F-14980)
7480 150TH COURT NORTH
PALM BEACH GARDENS, FL 33418
PHONE: 561-744-3424

CERTIFICATION
MAR 21 2016
WARREN W. SCHAEFER, P.E.
P.E. NO. 113497

DRAWING NO. 1460T
REV. A
SHEET NO. 1 OF 13

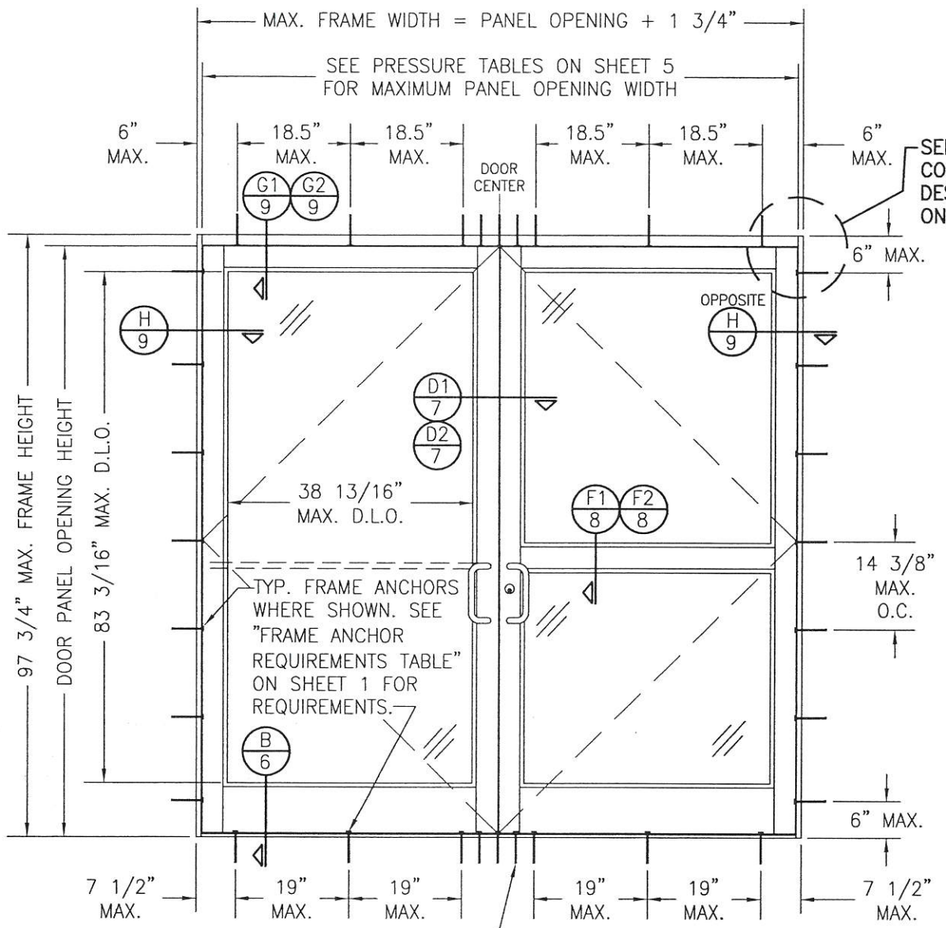

AT HEAD & SILL, CLUSTER ANCHORS AS SHOWN AT MEETING STILE ENDS SPACED 3" APART. CLUSTER 6 ANCHORS WITH ANCHOR TYPE A; CLUSTER 5 ANCHORS WITH ANCHOR TYPES B, C, D & F (ANCHOR "E" IS NOT APPLICABLE AT HEAD & SILL).

EXTERIOR ELEVATION; DOUBLE DOOR WITH STANDARD FRAMING & STANDARD INSTALLATION

SCALE: 1/2" = 1'-0"

(APPLICABLE WITH ALL HINGE TYPES)

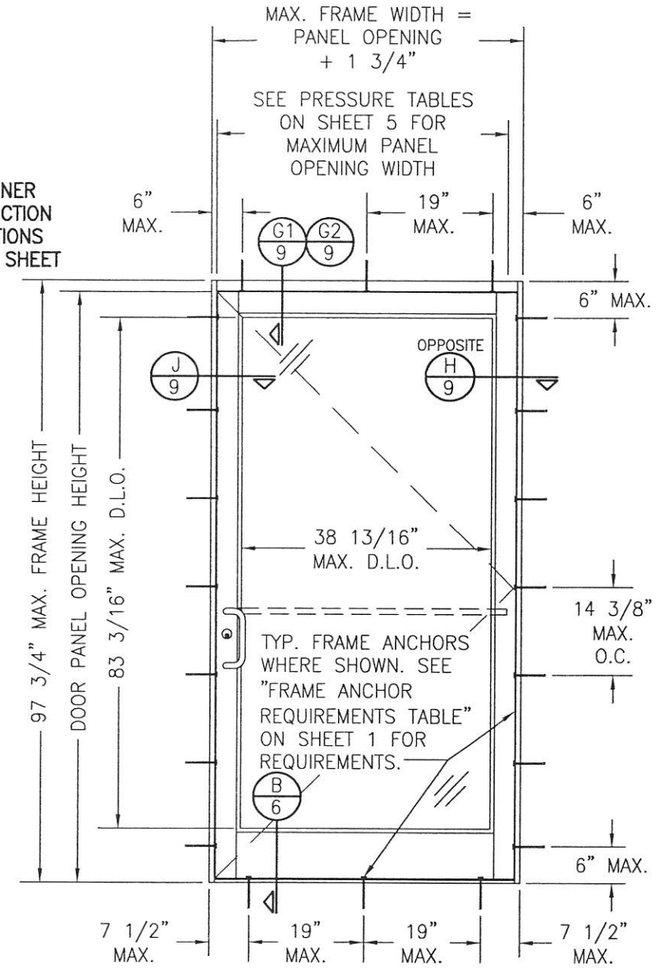

EXTERIOR ELEVATION; SINGLE DOOR WITH STANDARD FRAMING & STANDARD INSTALLATION

SCALE: 1/2" = 1'-0"

(APPLICABLE WITH ALL HINGE TYPES)

ALLOWABLE DESIGN PRESSURE
SEE SHEET 5

CORNER & FRAME END CONSTRUCTION

FRAME HEAD CORNER (IR500/501 FRAME): HEAD IS SQUARE CUT, BUTTED TO SIDE, FASTENED WITH THREE (3) NO. 12 X 1" S.S. PHTFS FASTENERS THROUGH THE SIDE MEMBER INTO THE HEAD MEMBER SCREW SPLINES & SEALED WITH SILICONE.

FRAME HEAD CORNER (TRIFAB 450/451 FRAME): HEAD IS SQUARE CUT, BUTTED TO SIDE, SECURED WITH SHEAR BLOCK ITEM# 16 (SEE SECTION G/9 & M/10) & SEALED WITH SILICONE.

FRAME SILL CORNER: SILL IS SQUARE CUT, BUTTED TO SIDE, SECURED TO THE SIDE MEMBER USING A PIVOT ASSEMBLY OR STEEL CLIP, FASTENED WITH THREE (3) NO. 12-24 X 3/8" FHMS AT THE FRAME & TWO (2) NO. 12-24 X 3/8" FHMS AT THE SILL, & SEALED WITH SILICONE.

DOOR PANEL CORNERS: VERTICAL STILES RUN THROUGH AND ARE SECURED TO THE RAILS AT THE TOP & BOTTOM WITH 1/4" THICK EXTRUDED CHANNELS. EACH CHANNEL IS FASTENED TO THE STILE & RAIL WITH 1/4-20 X 3/4" PHMS & 3/16" THICK STEEL NUT PLATES. THE INTERSECTION OF EACH CORNER JOINT WAS WELDED WITH A 1/2" DIA. PLUG WELD AND A 1 1/8" LONG FILLET WELD AT BOTH WEBS OF THE RAIL.

MIDRAIL ENDS: SECURED TO THE VERTICAL RAILS WITH 4 EACH 1 1/8" LONG FILLET WELDS

DRAWN BY: W.R.M.	CHECKED BY: W.W.S.
PLOT: 1=24	DATE: 11/26/13

NO.	REVISION DESCRIPTION	BY	DATE

JOB INFORMATION:
KAWNEER COMPANY, INC.
555 GUTHRIDGE COURT
NORCROSS, GA 30092
770-449-5555

DRAWING TITLE
350IR OUT-SWING IMPACT DOOR

CONSULTANTS
W. W. SCHAEFER ENGINEERING & CONSULTING, P.A. (REG. NO. F-14980)
7480 150TH COURT NORTH
PALM BEACH GARDENS, FL 33418
PHONE: 561-744-3424

CERTIFICATION
MAR 21 2016
WARREN W. SCHAEFER, P.E.
P.E. NO. 113497

DRAWING NO. 1460T
REV. A
SHEET NO. 2 OF 13

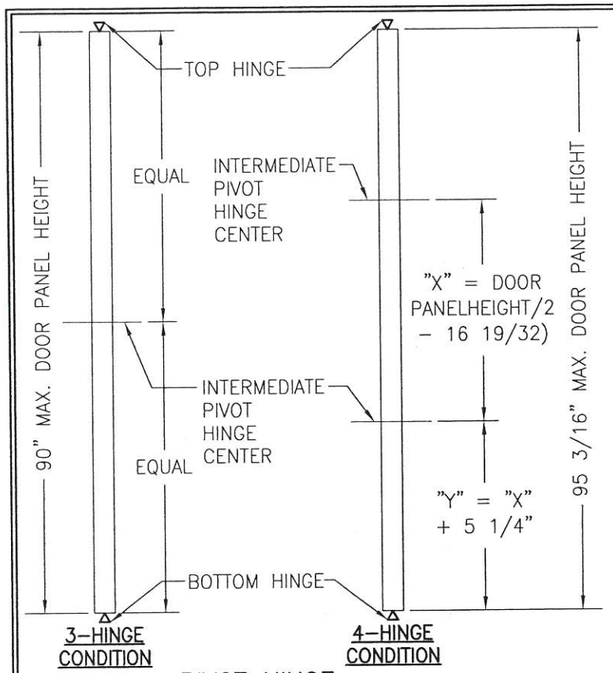

PIVOT HINGE LOCATION DIAGRAMS
(APPLICABLE TO ALL DOORS)

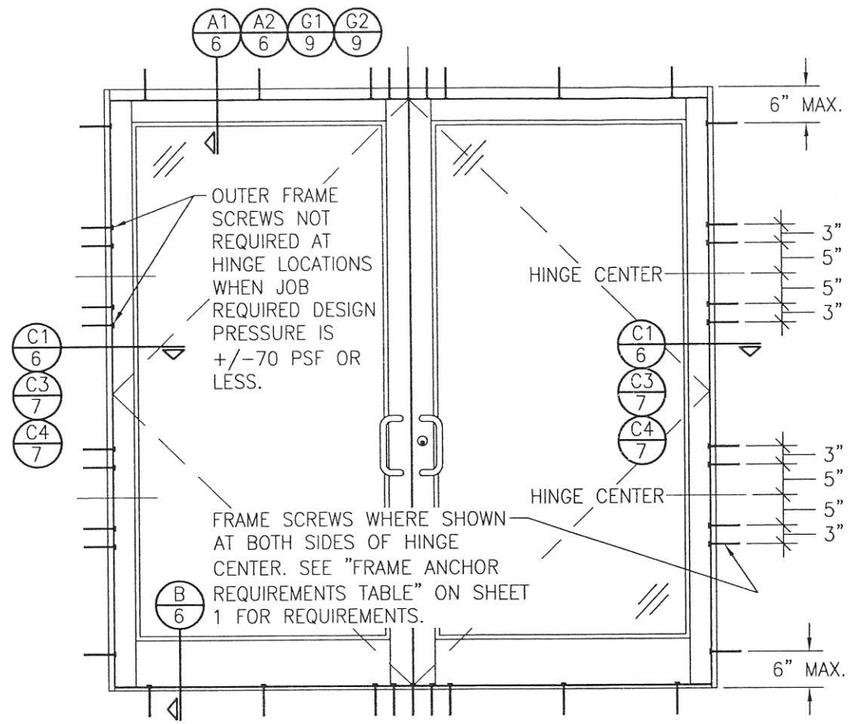

EXTERIOR ELEVATION;
DOUBLE DOOR WITH ALTERNATE INSTALLATION CONDITION
SCALE: 1/2" = 1'-0"
(APPLICABLE WITH BUTT & PIVOT HINGE DOORS ONLY)
(FOR DOOR DETAIL & HARDWARE NOT SHOWN, SEE ELEVATIONS ON SHEETS 1 & 2)
(ELEVATION SHOWN WITH STANDARD FRAMING. STOREFRONT FRAMING ALSO APPLIES)

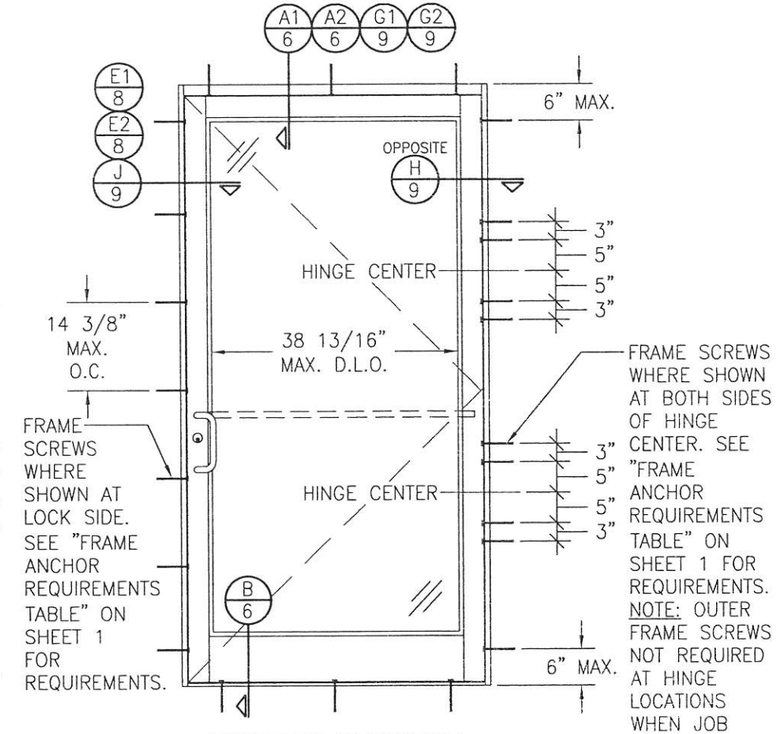

FRAME SCREWS WHERE SHOWN AT BOTH SIDES OF HINGE CENTER. SEE "FRAME ANCHOR REQUIREMENTS TABLE" ON SHEET 1 FOR REQUIREMENTS. NOTE: OUTER FRAME SCREWS NOT REQUIRED AT HINGE LOCATIONS WHEN JOB REQUIRED DESIGN PRESSURE IS +/-70 PSF OR LESS & PANELS HAVE 4 HINGES.

EXTERIOR ELEVATION;
SINGLE DOOR WITH ALTERNATE INSTALLATION CONDITION
SCALE: 1/2" = 1'-0"
(APPLICABLE WITH BUTT & PIVOT HINGE DOORS ONLY)
(FOR DOOR DETAIL & HARDWARE NOT SHOWN, SEE ELEVATIONS ON SHEETS 1 & 2)
(ELEVATION SHOWN WITH STANDARD FRAMING. STOREFRONT FRAMING ALSO APPLIES)

ALLOWABLE DESIGN PRESSURE
SEE SHEET 5

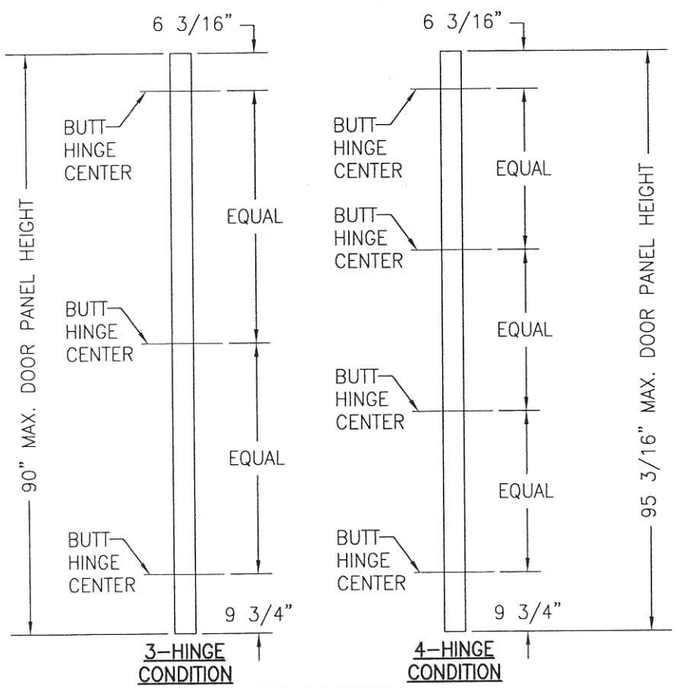

BUTT HINGE LOCATION DIAGRAMS
(APPLICABLE TO ALL DOORS)

DRAWN BY: W.R.M.	CHECKED BY: W.W.S.
PLOT: 1=24	DATE: 11/26/13

NO.	REVISION DESCRIPTION	BY	DATE

JOB INFORMATION:
KAWNEER COMPANY, INC.
555 GUTHRIDGE COURT
NORCROSS, GA 30092
770-449-5555

DRAWING TITLE
350IR OUT-SWING IMPACT DOOR

CONSULTANTS
W. W. SCHAEFER ENGINEERING & CONSULTING, P.A. (REG. NO. F-14980)
7480 150TH COURT NORTH
PALM BEACH GARDENS, FL 33418
PHONE: 561-744-3424

CERTIFICATION
MAR 21 2016
WARREN W. SCHAEFER P.E. NO. 113497 P.E.

DRAWING NO.	REV.
1460T	A

SHEET NO. 3 OF 13

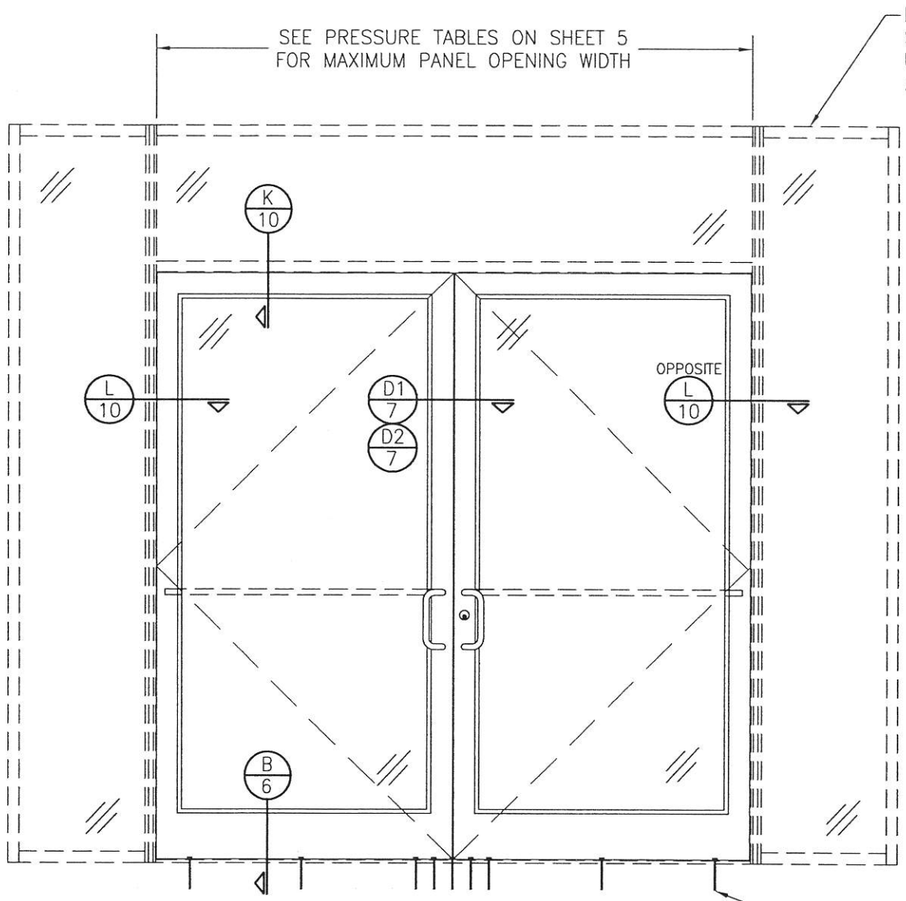

EXTERIOR ELEVATION;
DOORS INSIDE IR-500 OR IR-501 STORE FRONT SYSTEM
SCALE: 1/2"=1'-0"

NOTES:

1. FOR DETAILS NOT SHOWN, SEE ELEVATIONS ON SHEETS 1 & 3.
2. DOUBLE DOOR SHOWN; SINGLE DOOR CONDITION ALSO APPLIES.
3. FOR STORE FRONT FRAMING REQUIREMENTS & INSTALLATION, SEE RESPECTIVE STORE FRONT APPROVAL.
4. LESSER ALLOWABLE PRESSURE RATING OF THE DOORS & STOREFRONT SHALL CONTROL FOR THE OVERALL ASSEMBLY.

ALLOWABLE DESIGN PRESSURE
SEE SHEET 5

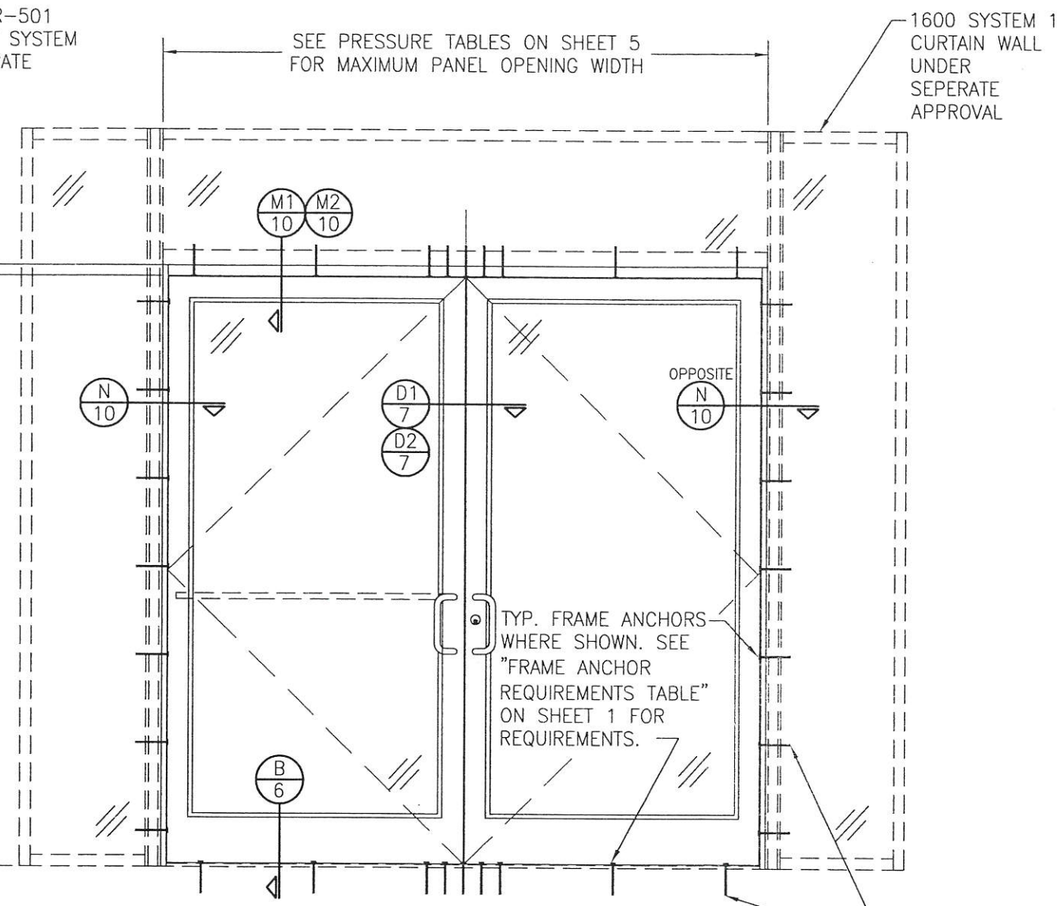

EXTERIOR ELEVATION;
DOORS INSIDE 1600 SYSTEM 1 CURTAIN WALL
SCALE: 1/2"=1'-0"

NOTES:

1. FOR DETAILS NOT SHOWN, SEE ELEVATIONS ON SHEETS 2 & 3.
2. DOUBLE DOOR SHOWN; SINGLE DOOR CONDITION ALSO APPLIES.
3. FOR STORE FRONT FRAMING REQUIREMENTS & INSTALLATION, SEE RESPECTIVE STORE FRONT APPROVAL.
4. LESSER ALLOWABLE PRESSURE RATING OF THE DOORS & STOREFRONT SHALL CONTROL FOR THE OVERALL ASSEMBLY.

DRAWN BY: W.R.M.	CHECKED BY: W.W.S.
PLOT: 1=24	DATE: 11/26/13

NO.	REVISION DESCRIPTION	BY	DATE

JOB INFORMATION:
KAWNEER COMPANY, INC.
555 GUTHRIDGE COURT
NORCROSS, GA 30092
770-449-5555

DRAWING TITLE
350IR OUT-SWING IMPACT DOOR

CONSULTANTS
W. W. SCHAEFER ENGINEERING & CONSULTING, P.A. (REG. NO. F-14980)
7480 150TH COURT NORTH
PALM BEACH GARDENS, FL 33418
PHONE: 561-744-3424

CERTIFICATION
MAR 21 2016
WARREN W. SCHAEFER, P.E.
P.E. NO. 113497

DRAWING NO.	REV.
1460T	A

SHEET NO.
4 OF 13

ALLOWABLE DESIGN PRESSURE (AS RESTRICTED BY GLASS & GLAZING)

MAXIMUM DOOR PANEL OPENING WIDTH (IN.)		APPLICABLE GLAZING DETAIL	APPLICABLE GLASS OPTIONS	ALLOWABLE PRESSURE (+/−PSF)
DOUBLE DOOR	SINGLE DOOR			
96	48	1	1 & 2	65
96	48	2	1, 2 & 3	70
96	48	2 & 4	4 & 5	90
96	48	3 & 5	3 & 5	70
84	42	1	3 & 4	90
96	48	4	6 & 7	60

ALLOWABLE DESIGN PRESSURE (AS RESTRICTED BY MULTI-POINT LOCK CONDITIONS)

MAXIMUM DOOR PANEL OPENING WIDTH (IN.)		LOCK CONDITION	ALLOWABLE PRESSURE (+/−PSF)
DOUBLE DOOR	SINGLE DOOR		
96	48	1	70
84	42	1	90
96	48	2	90

LOCK CONDITION 1:
ACTIVE DOOR: SEE ITEM #39 ON SHEET 13 FOR LOCK REQUIREMENTS
INACTIVE DOOR: SEE ITEM #40 ON SHEET 13 FOR LOCK REQUIREMENTS
LOCK CONDITION 2:
ACTIVE DOOR: SEE ITEM #41 ON SHEET 13 FOR LOCK REQUIREMENTS
INACTIVE DOOR: SEE ITEM #42 ON SHEET 13 FOR LOCK REQUIREMENTS

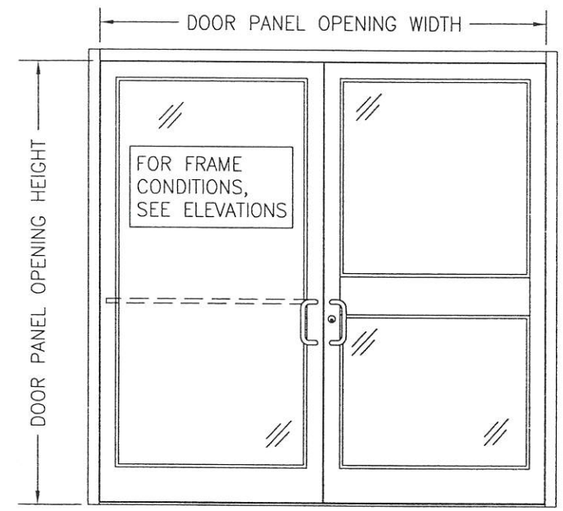

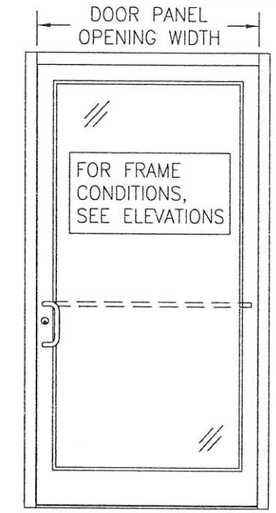

ALLOWABLE DESIGN PRESSURE (AS RESTRICTED BY PANIC DEVICE LOCK CONDITIONS)

MAXIMUM DOOR PANEL OPENING WIDTH (IN.)		PANIC DEVICE	ALLOWABLE PRESSURE (+/−PSF)
DOUBLE DOOR	SINGLE DOOR		
96	48	SARGENT AD8400	70
96	48	ADAMS RITE G86	70
96	48	CALIBRE 9100	70
96	48	VON DUPRIN HH9947	65
96	48	JACKSON 2086	90
84	42	KAWNEER 1686	90
96	48		70
96	48	PANELINE CR-90	70
96	48	SARGENT 8400	65
96	48	CORBIN RUSSWIN ED5200S(A)	50
72	36	FALCON HH1690	65

PRESSURE TABLE NOTES (ALL TABLES)

1. CONDITIONS IN THESE TABLES ARE APPLICABLE FOR ALL DOORS TO THEIR MAXIMUM PANEL HEIGHT OF 96".
2. SEE GLAZING DETAILS ON THIS SHEET FOR GLAZING DETAILS & GLASS OPTIONS APPLICABLE TO THESE TABLES.
3. SEE ELEVATIONS ON THIS SHEET FOR VIEW OF DOOR PANEL OPENING HEIGHT & WIDTH.
4. THE LESSER PRESSURE IN ANY ONE TABLE SHALL CONTROL AS THE ALLOWABLE PRESSURE ON THE DOOR ASSEMBLY.

ALLOWABLE DESIGN PRESSURE (AS RESTRICTED BY BUTT & PIVOT HINGE QUANTITY)

HINGE QUANTITY PER PANEL	ALLOWABLE PRESSURE (+/−PSF)
3	70
4	90

NOTE: 3 HINGES PER DOOR PANEL IS ONLY APPLICABLE WITH DOOR OPENING PANEL HEIGHTS OF 90" & LESS

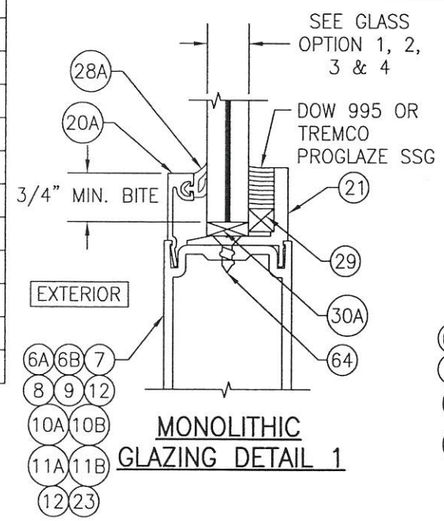

MONOLITHIC GLAZING DETAIL 1

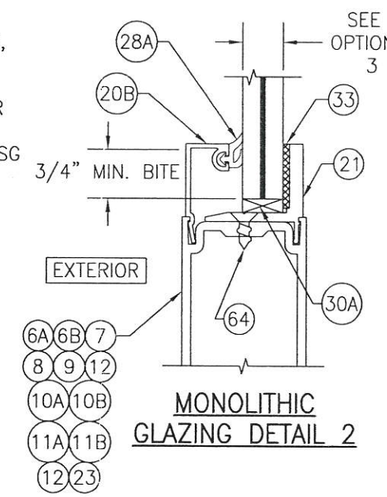

MONOLITHIC GLAZING DETAIL 2

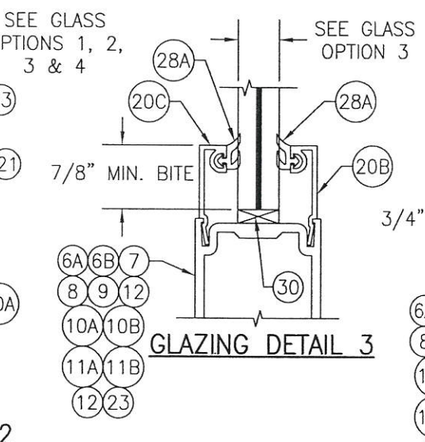

GLAZING DETAIL 3

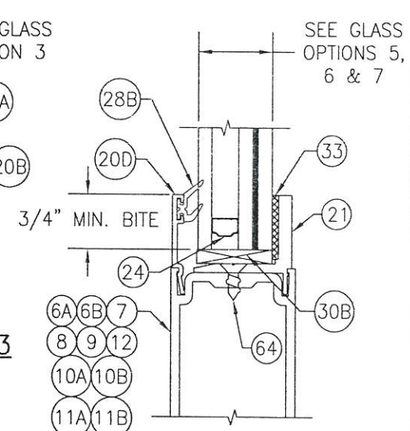

I.G. GLAZING DETAIL 4

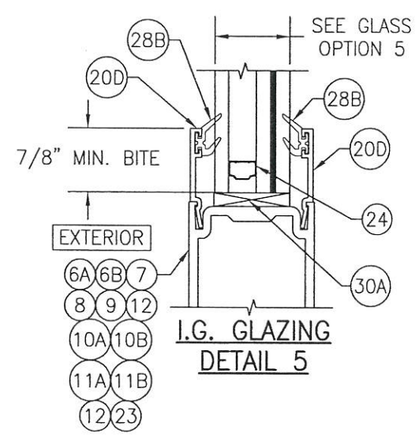

I.G. GLAZING DETAIL 5

GLASS OPTIONS:

OPTION 1: 9/16" THICK LAMINATED GLASS (1/4" HT. ST./0.090 EASTMAN CHEMICAL CO. SAFLEX/1/4" HT. ST.)
OPTION 2: 9/16" THICK LAMINATED GLASS (1/4" HT. ST./0.09 DUPONT BUTICITE PVB/1/4" HT. ST.)
OPTION 3: 9/16" THICK LAMINATED GLASS (1/4" HT. ST./0.09 DUPONT SG/1/4" HT. ST.)
OPTION 4: 9/16" THICK LAMINATED GLASS (1/4" HT. ST./0.077" EASTMAN CHEMICAL CO. SAFLEX CP/1/4" HT. ST.)
OPTION 5: 1" THICK I.G LAMINATED GLASS (3/16" TEMP EXTERIOR; 3/8" AIR SPACE; 3/16" HT. ST./0.090" DUPONT SG/3/16" HT. ST. INTERIOR)
OPTION 6: 1" THICK I.G LAMINATED GLASS (3/16" TEMP EXTERIOR; 3/8" AIR SPACE; 3/16" HT. ST./0.090" DUPONT BUTICITE PVB/3/16" HT. ST. INTERIOR)
OPTION 7: 1" THICK I.G LAMINATED GLASS (3/16" TEMP EXTERIOR; 3/8" AIR SPACE; 3/16" HT. ST./0.090" EASTMAN CHEMICAL CO. SAFLEX/3/16" HT. ST. INTERIOR)

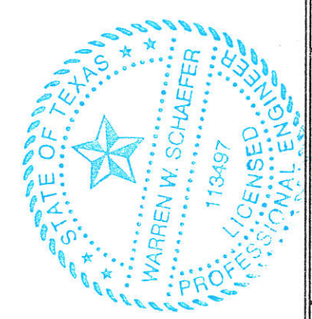

DRAWN BY: W.R.M.	CHECKED BY: W.W.S.
PLOT: 1=24	DATE: 11/26/13

NO.	REVISION DESCRIPTION	BY	DATE

JOB INFORMATION:
KAWNEER COMPANY, INC.
555 GUTHRIDGE COURT
NORCROSS, GA 30092
770-449-5555

DRAWING TITLE
350IR OUT-SWING IMPACT DOOR

CONSULTANTS
W. W. SCHAEFER ENGINEERING & CONSULTING, P.A. (REG. NO. F-14980)
7480 150TH COURT NORTH
PALM BEACH GARDENS, FL 33418
PHONE: 561-744-3424

CERTIFICATION
MAR 21 2016
WARREN W. SCHAEFER, P.E.
P.E. NO. 113497

DRAWING NO. 1460T
REV. A
SHEET NO. 5 OF 13

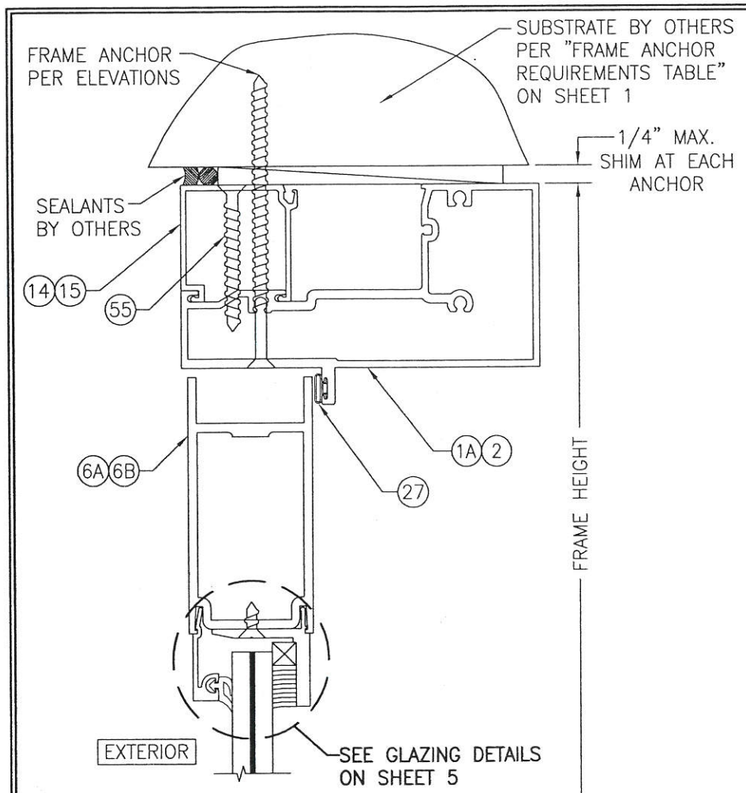

SECTION A1/6
SCALE: 1/2 FULL
(WITH IR-500/501 FRAMING)

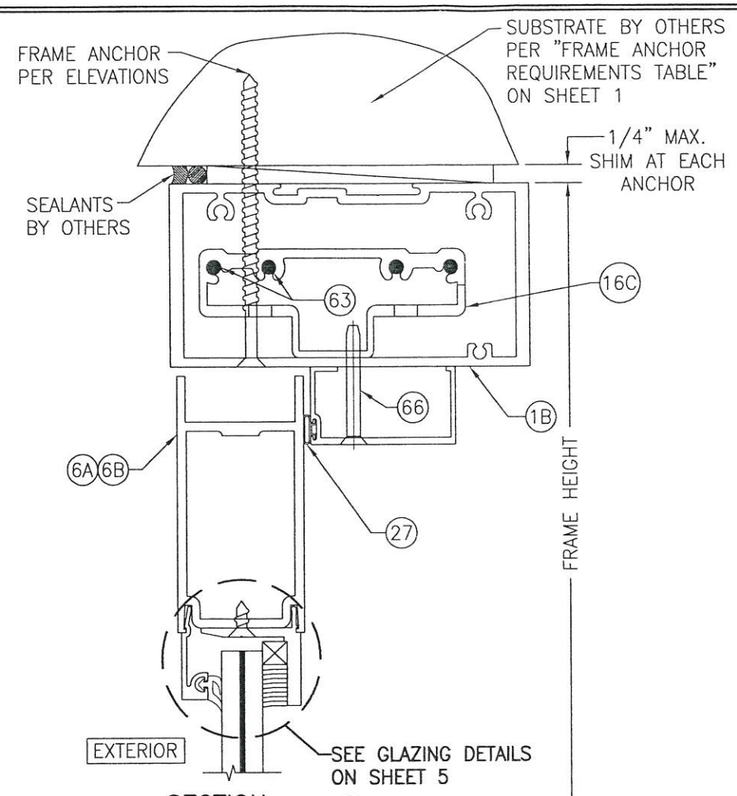

SECTION A2/6
SCALE: 1/2 FULL
(WITH IR-500/501 FRAMING)

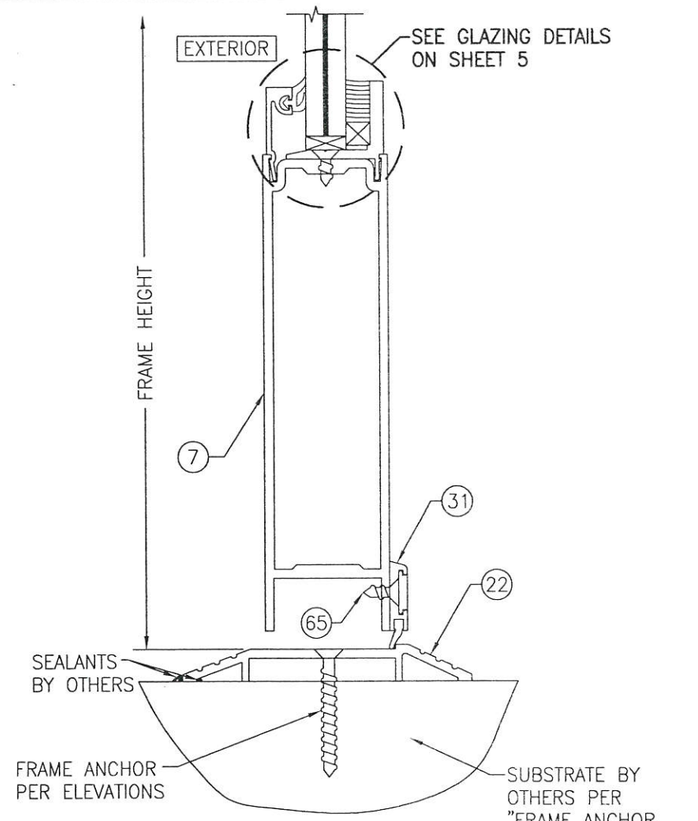

SECTION B/6
SCALE: 1/2 FULL

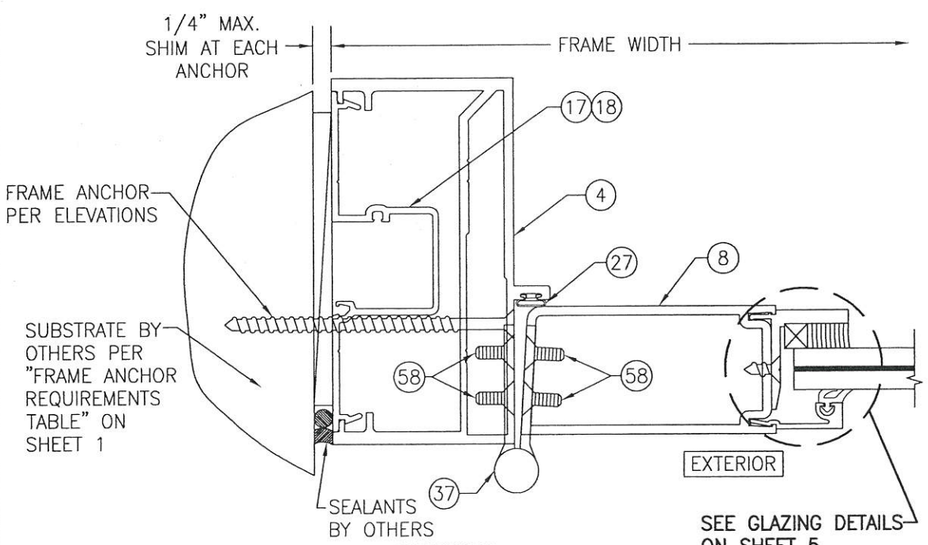

SECTION C1/6
SCALE: 1/2 FULL
(WITH IR-500/501 FRAMING & BUTT HINGE CONDITION)

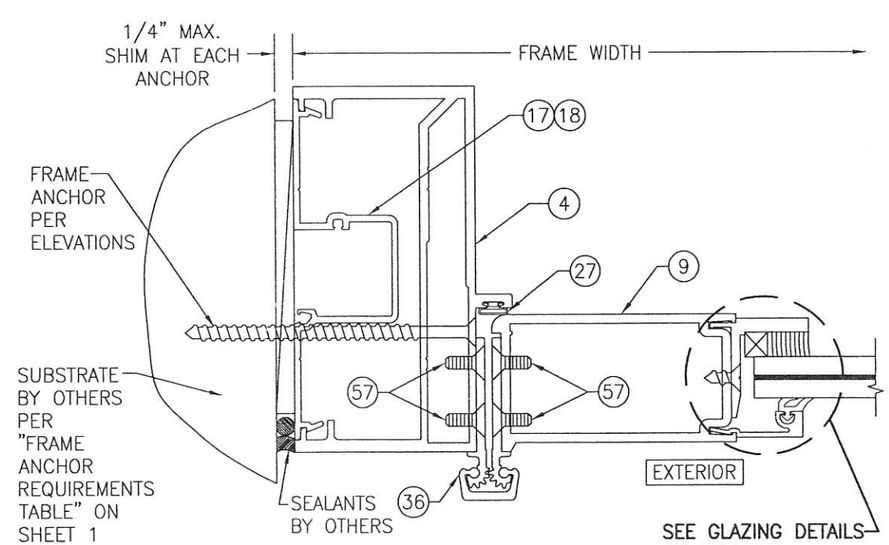

SECTION C2/6
SCALE: 1/2 FULL
(WITH IR-500/501 FRAMING & GEAR HINGE CONDITION)

DRAWN BY: W.R.M.	CHECKED BY: W.W.S.
PLOT: 1=2	DATE: 11/26/13

NO.	REVISION DESCRIPTION	BY	DATE

DRAWING TITLE
350IR OUT-SWING IMPACT DOOR

JOB INFORMATION:
KAWNEER COMPANY, INC.
555 GUTHRIDGE COURT
NORCROSS, GA 30092
770-449-5555

CONSULTANTS
W. W. SCHAEFER ENGINEERING & CONSULTING, P.A. (REG. NO. F-14980)
7480 150TH COURT NORTH
PALM BEACH GARDENS, FL 33418
PHONE: 561-744-3424

CERTIFICATION
MAR 21 2016
WARREN W. SCHAEFER, P.E.
P.E. NO. 113497

DRAWING NO. 1460T
REV. A
SHEET NO. 6 OF 13

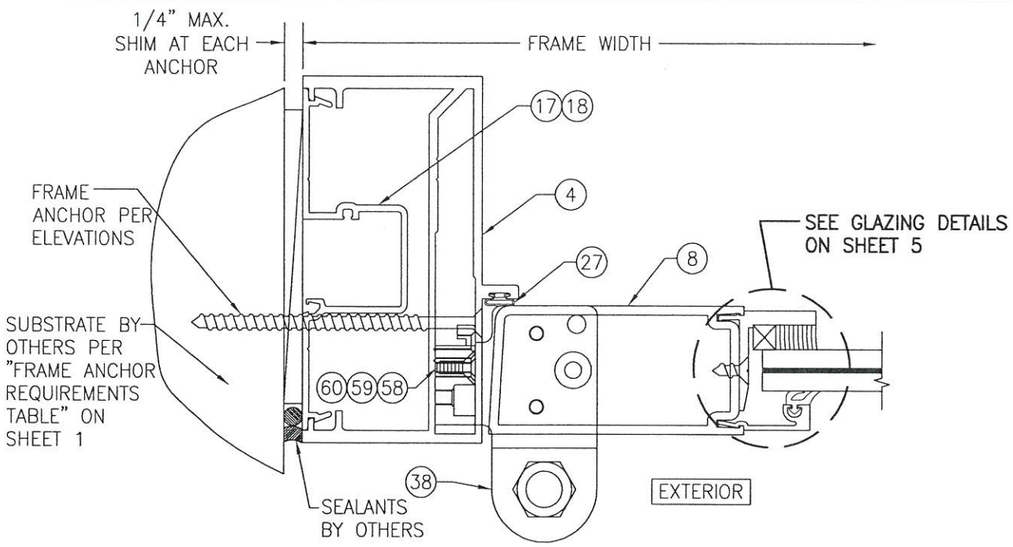

SECTION C3/7
SCALE: 1/2 FULL
(WITH IR-500/501 FRAMING & PIVOT HINGE CONDITION)

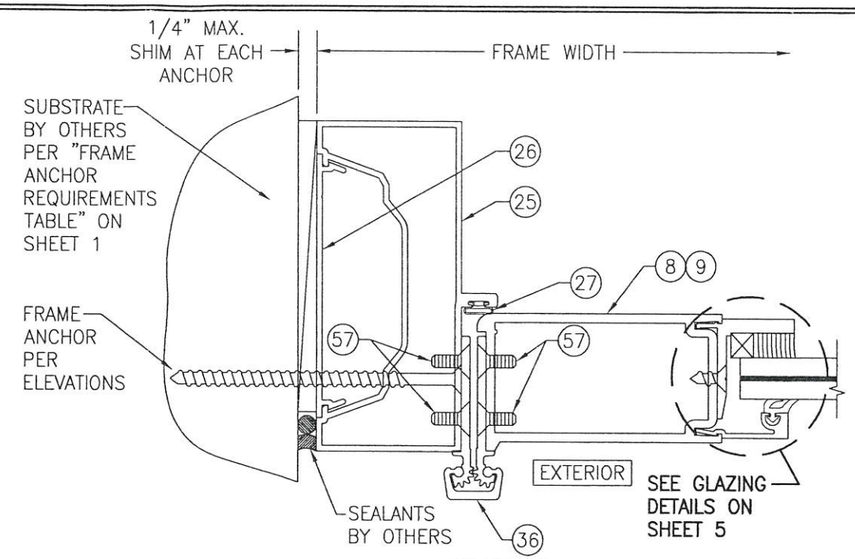

SECTION C4/7
SCALE: 1/2 FULL
(WITH TRIFAB 450/451 FRAMING)
(GEAR HINGE CONDITION SHOWN. FOR OTHER HINGE CONDITIONS APPLICABLE TO THIS SECTION, SEE SECTIONS C1/6 & C3/7.)

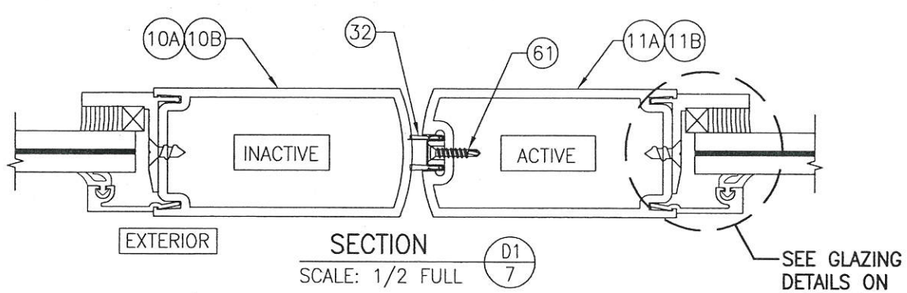

SECTION D1/7
SCALE: 1/2 FULL
(APPLICABLE WITH ALL LOCK CONDITIONS WITH THE EXCEPTION OF CORBIN RUSSWIN PANIC DEVICE ITEM #54)

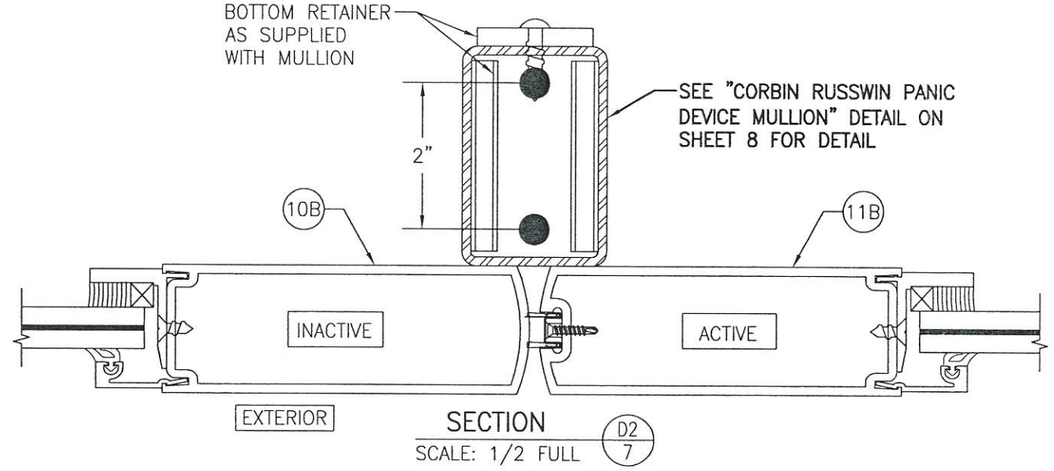

SECTION D2/7
SCALE: 1/2 FULL
(FOR DETAIL NOT SHOWN, SEE SECTION D1/7)
(APPLICABLE WITH CORBIN RUSSWIN PANIC DEVICE ITEM #54 ONLY)

STATE OF TEXAS
WARREN W. SCHAEFER
113497
LICENSED
PROFESSIONAL ENGINEER

DRAWN BY: W.R.M.	CHECKED BY: W.W.S.
PLOT: 1=2	DATE: 11/26/13

NO.	REVISION DESCRIPTION	BY	DATE

JOB INFORMATION:
KAWNEER COMPANY, INC.
555 GUTHRIDGE COURT
NORCROSS, GA 30092
770-449-5555

DRAWING TITLE

CONSULTANTS
W. W. SCHAEFER ENGINEERING & CONSULTING, P.A. (REG. NO. F-14980)
7480 150TH COURT NORTH
PALM BEACH GARDENS, FL 33418
PHONE: 561-744-3424

CERTIFICATION
MAR 21 2016
WARREN W. SCHAEFER, P.E.
P.E. NO. 113497

DRAWING NO. 1460T
REV. A
SHEET NO. 7 OF 13

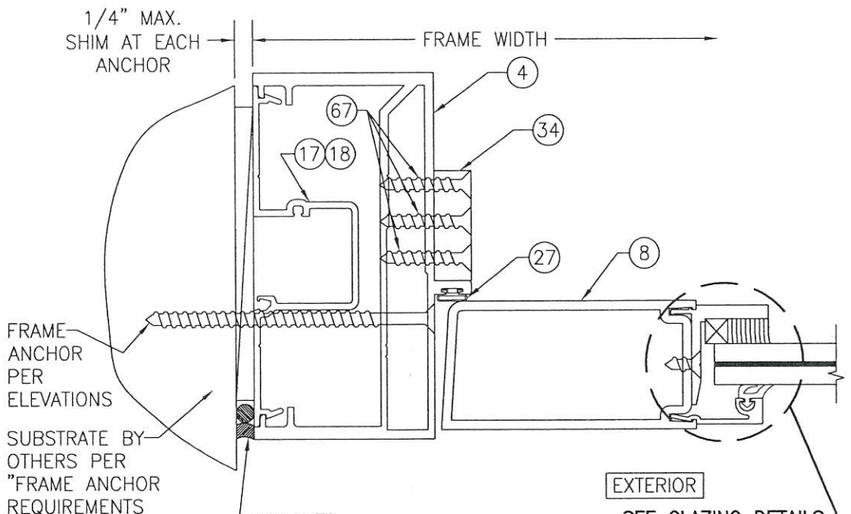

SECTION E1/8
SCALE: 1/2 FULL
(WITH IR-500/501 FRAMING)

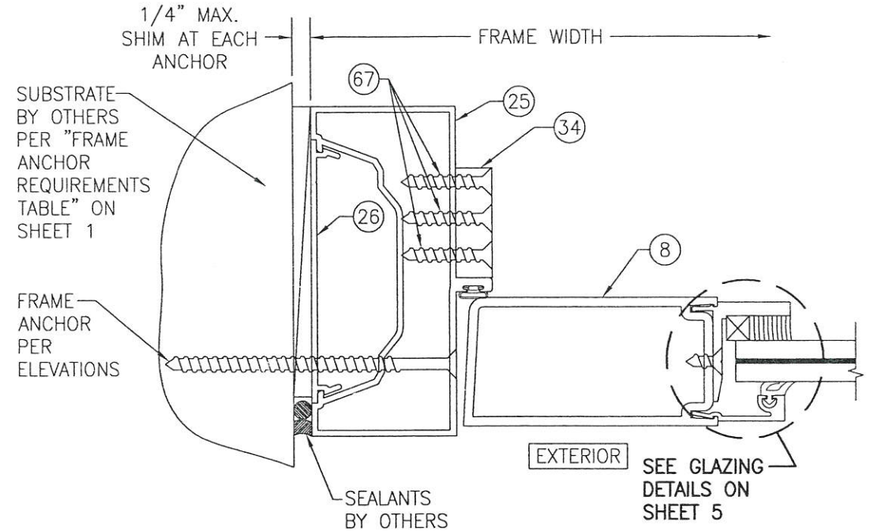

SECTION E2/8
SCALE: 1/2 FULL
(WITH TRIFAB 450/451 FRAMING)

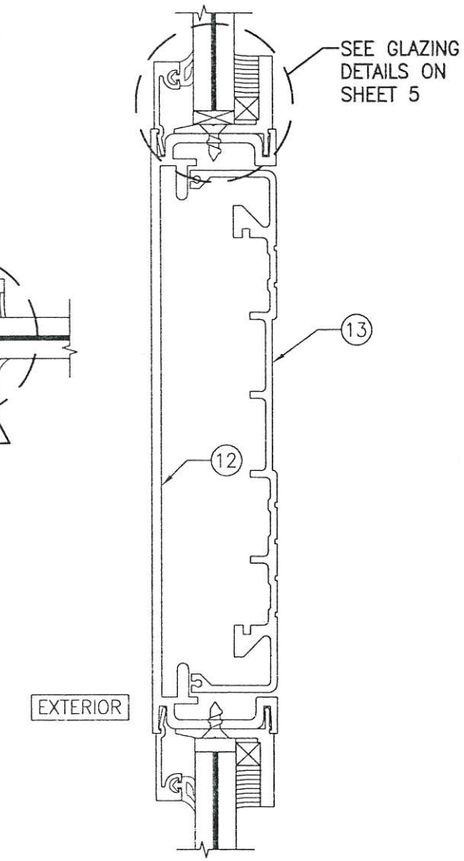

SECTION F1/8
SCALE: 1/2 FULL

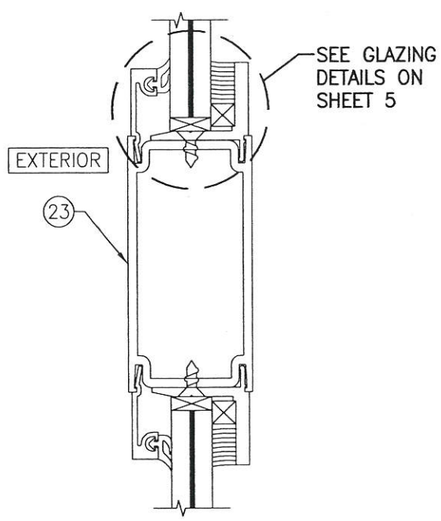

SECTION F2/8
SCALE: 1/2 FULL

NOTE: THIS MID-RAIL MAY NOT BE USED ON DOORS WITH REQUIRED DESIGN PRESSURE OVER +/-70 PSF.

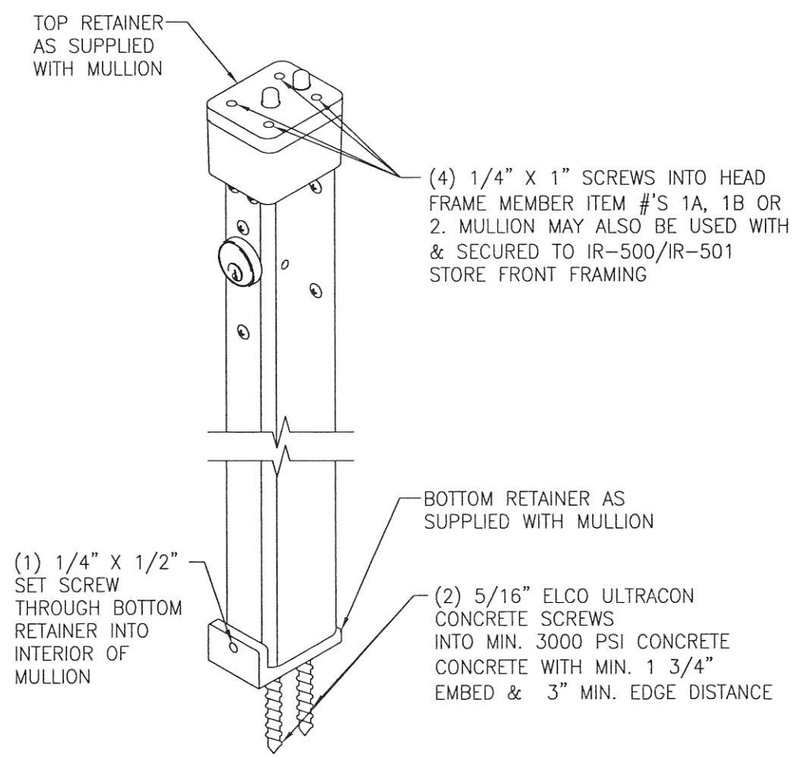

CORBIN RUSSWIN WS708AKM KEYED INTERIOR MULLION
(KEYED LOCK SHOWN IS AT INTERIOR)
(APPLICABLE WITH CORBIN RUSSWIN ITEM #54 ONLY)

DRAWN BY: W.R.M.	CHECKED BY: W.W.S.
PLOT: 1=2	DATE: 11/26/13

NO.	REVISION DESCRIPTION	BY	DATE

JOB INFORMATION:
KAWNEER COMPANY, INC.
555 GUTHRIDGE COURT
NORCROSS, GA 30092
770-449-5555

DRAWING TITLE
350IR OUT-SWING IMPACT DOOR

CONSULTANTS
W. W. SCHAEFER ENGINEERING & CONSULTING, P.A. (REG. NO. F-14980)
7480 150TH COURT NORTH
PALM BEACH GARDENS, FL 33418
PHONE: 561-744-3424

CERTIFICATION
MAR 21 2016
WARREN W. SCHAEFER, P.E.
P.E. NO. 113497

DRAWING NO. 1460T
REV. A
SHEET NO. 8 OF 13

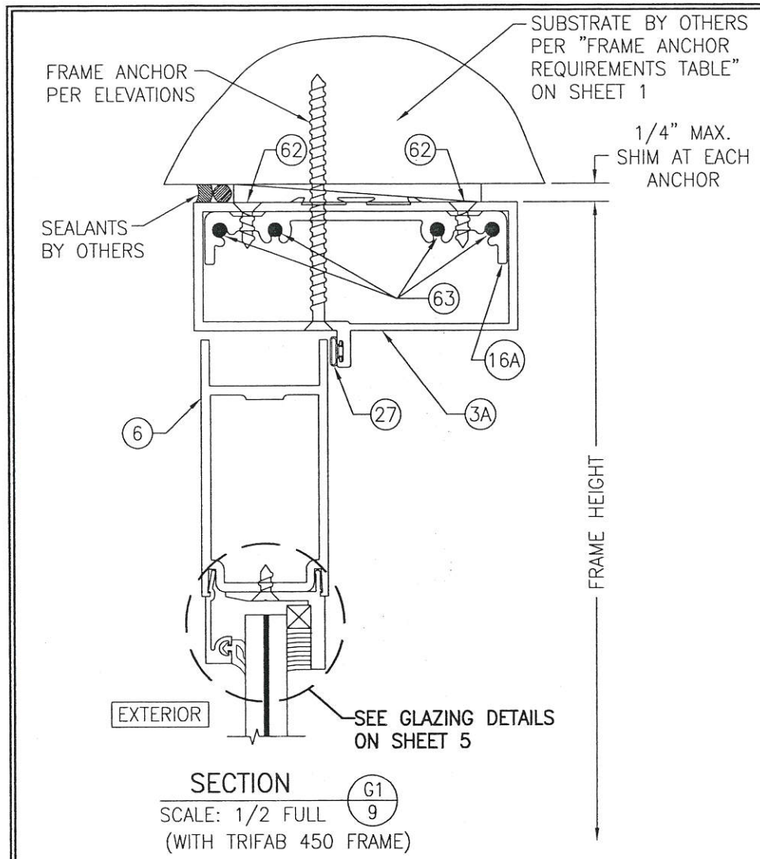

SECTION G1/9
SCALE: 1/2 FULL
(WITH TRIFAB 450 FRAME)

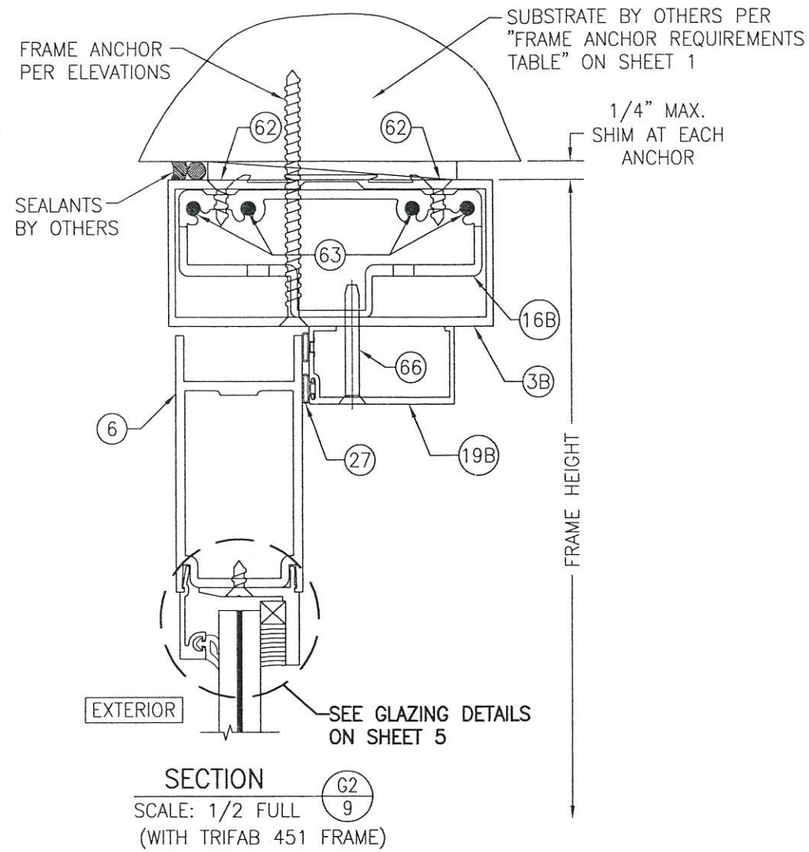

SECTION G2/9
SCALE: 1/2 FULL
(WITH TRIFAB 451 FRAME)

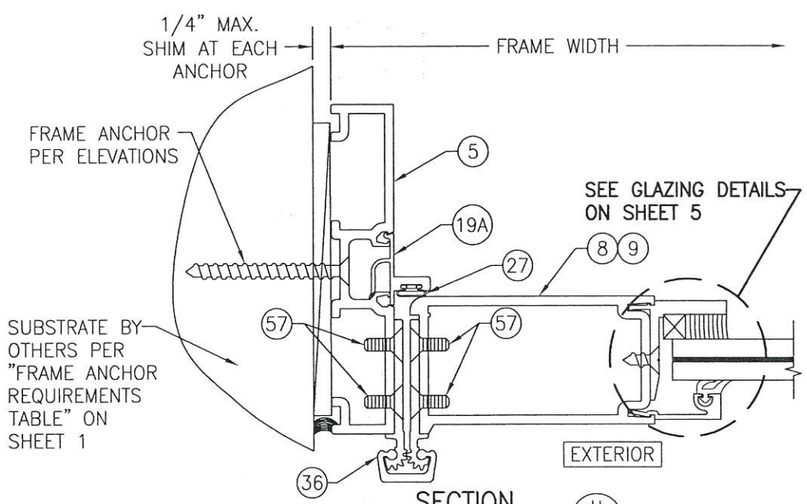

SECTION H/9
SCALE: 1/2 FULL
(GEAR HINGE CONDITION SHOWN; FOR OTHER HINGE CONDITIONS APPLICABLE TO THIS SECTION, SEE SECTIONS C1/6 & C3/7)

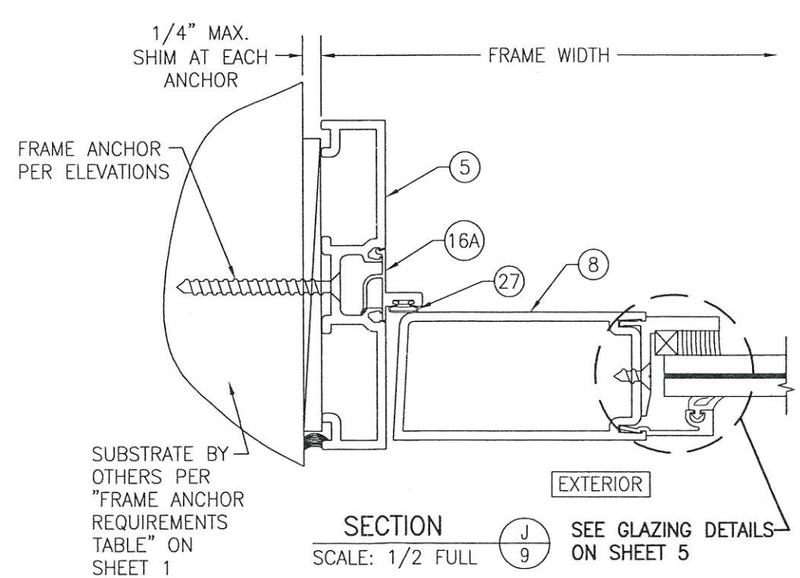

SECTION J/9
SCALE: 1/2 FULL

DRAWN BY: W.R.M.	CHECKED BY: W.W.S.
PLOT: 1=2	DATE: 11/26/13

NO.	REVISION DESCRIPTION	BY	DATE

DRAWING TITLE
350IR OUT-SWING IMPACT DOOR

JOB INFORMATION:
KAWNEER COMPANY, INC.
555 GUTHRIDGE COURT
NORCROSS, GA 30092
770-449-5555

CONSULTANTS
W. W. SCHAEFER ENGINEERING & CONSULTING, P.A. (REG. NO. F-14980)
7480 150TH COURT NORTH
PALM BEACH GARDENS, FL 33418
PHONE: 561-744-3424

CERTIFICATION
MAR 21 2016
WARREN W. SCHAEFER, P.E.
P.E. NO. 113497

DRAWING NO. 1460T
REV. A
SHEET NO. 9 OF 13

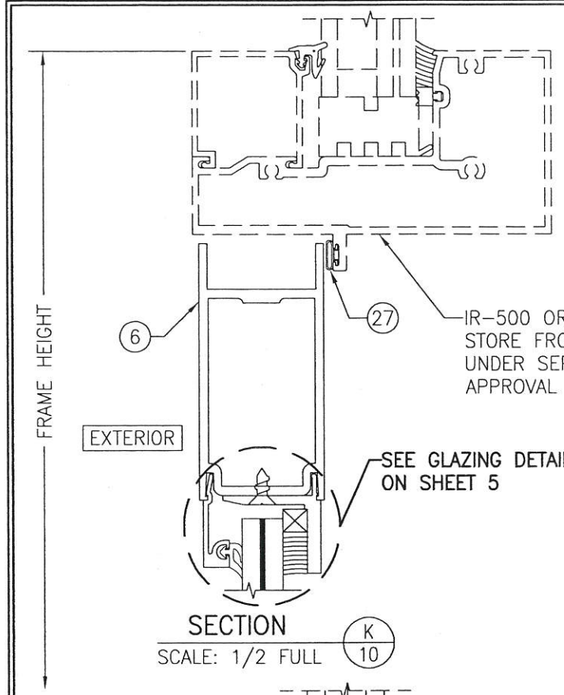

SECTION K/10
SCALE: 1/2 FULL

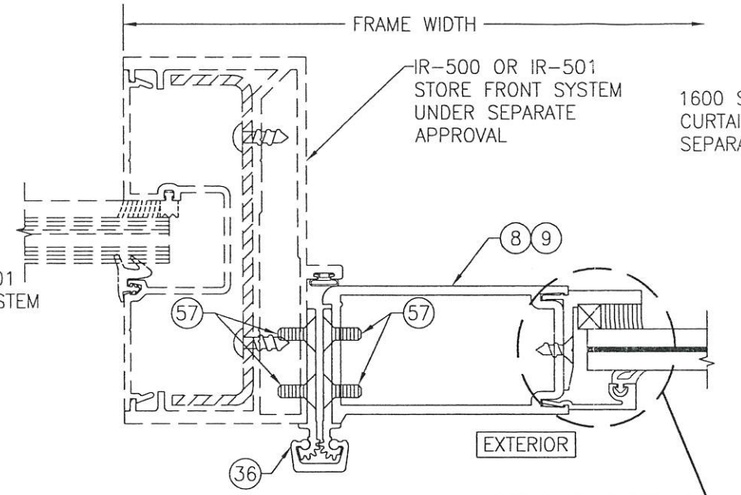

SECTION L/10
SCALE: 1/2 FULL
(GEAR HINGE CONDITION SHOWN; FOR OTHER HINGE APPLICABLE TO THIS SECTION, SEE SECTIONS C1/6 & C3/7)

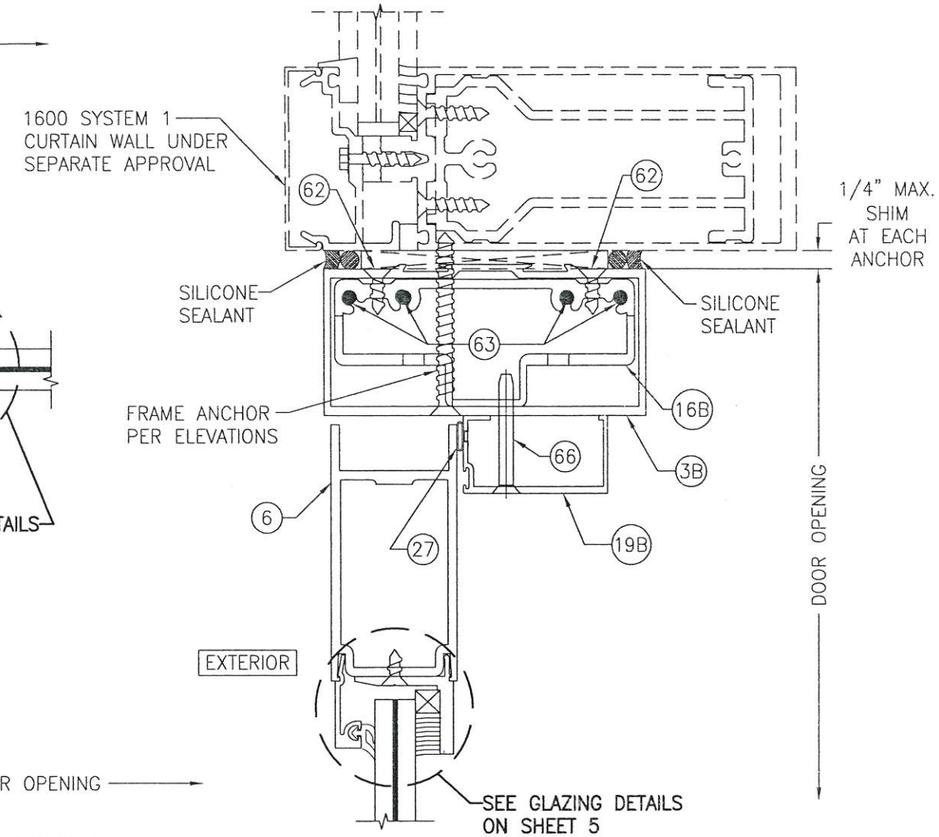

SECTION M1/10
SCALE: 1/2 FULL
(WITH TRIFAB 450 FRAME)

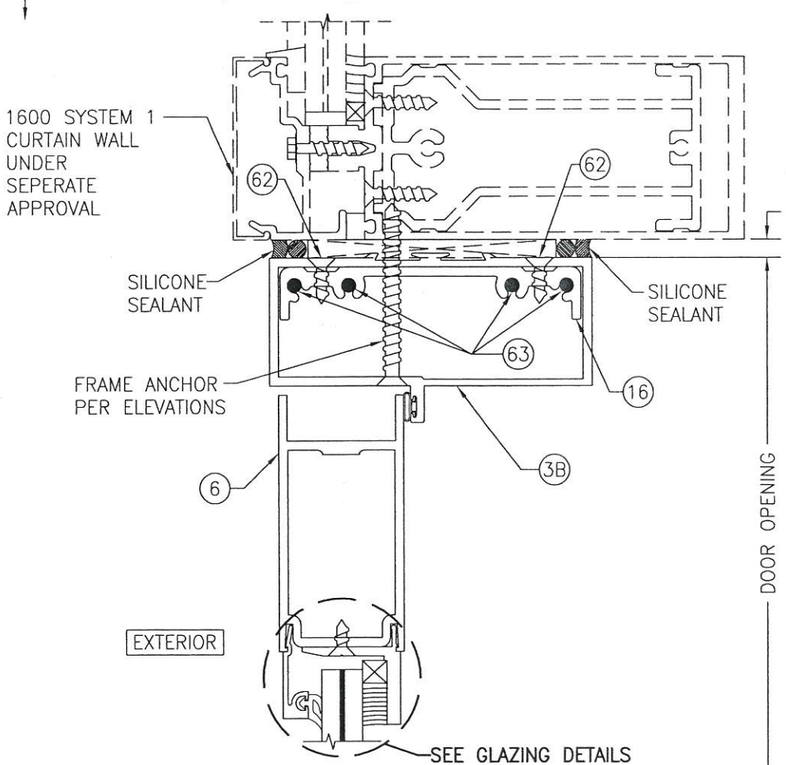

SECTION M2/10
SCALE: 1/2 FULL
(WITH TRIFAB 451 FRAME)

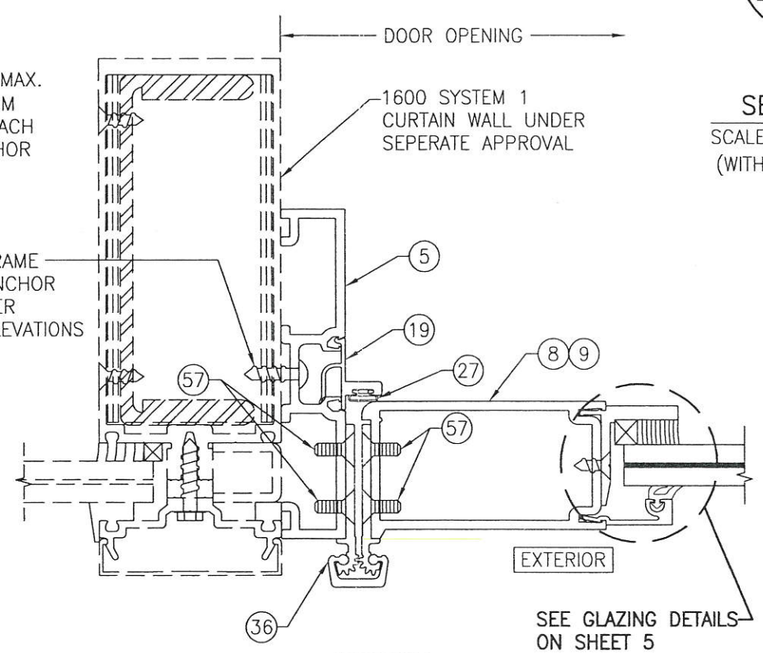

SECTION N/10
SCALE: 1/2 FULL
(GEAR HINGE CONDITION SHOWN; FOR OTHER HINGE CONDITIONS APPLICABLE TO THIS SECTION, SEE SECTIONS C1/6 & C3/7)

DRAWN BY: W.R.M.	CHECKED BY: W.W.S.
PLOT: 1=2	DATE: 11/26/13

NO.	REVISION DESCRIPTION	BY	DATE

JOB INFORMATION:
KAWNEER COMPANY, INC.
555 GUTHRIDGE COURT
NORCROSS, GA 30092
770-449-5555

DRAWING TITLE
350IR OUT-SWING IMPACT DOOR

CONSULTANTS
W. W. SCHAEFER ENGINEERING & CONSULTING, P.A. (REG. NO. F-14980)
7480 150TH COURT NORTH
PALM BEACH GARDENS, FL 33418
PHONE: 561-744-3424

CERTIFICATION
MAR 21 2016
WARREN W. SCHAEFER, P.E.
P.E. NO. 113497

DRAWING NO. 1460T
REV. A
SHEET NO. 10 OF 13

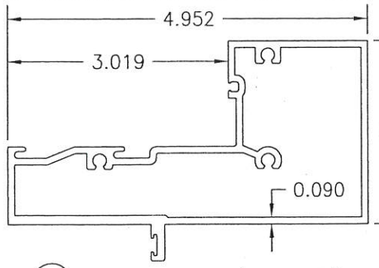

1A HEAD JAMB (IR-500)

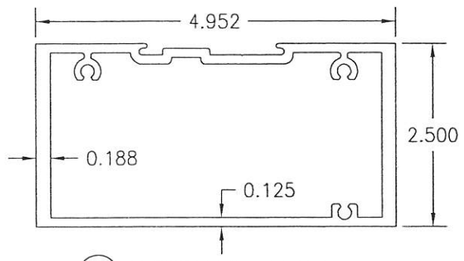

1B ALTERNATE HEAD JAMB (IR-501)

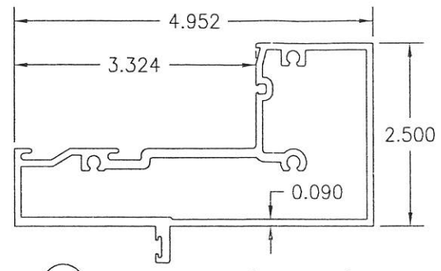

2 HEAD JAMB (IR-501)

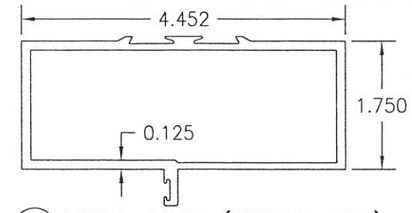

3A HEAD JAMB (TRIFAB 450)

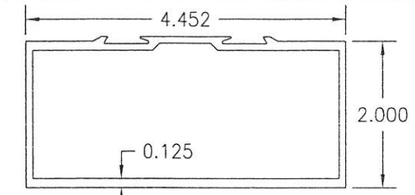

3B HEAD JAMB (TRIFAB 451)

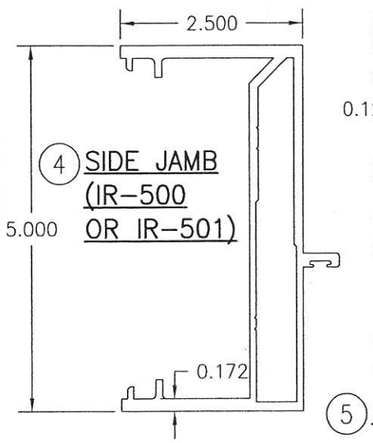

4 SIDE JAMB (IR-500 OR IR-501)

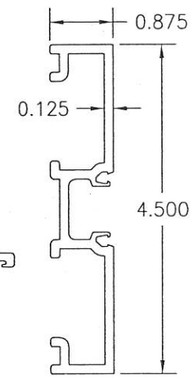

5 SIDE JAMB

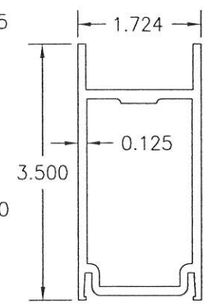

6A DOOR HEAD RAIL

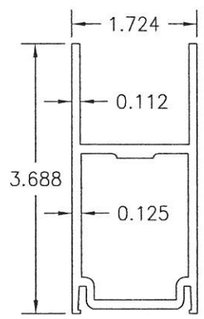

6B DOOR HEAD RAIL

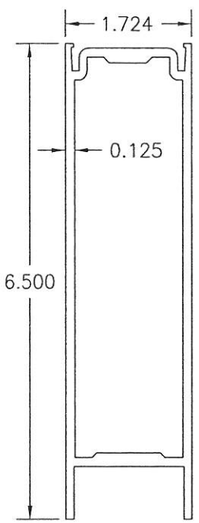

7 DOOR SILL RAIL

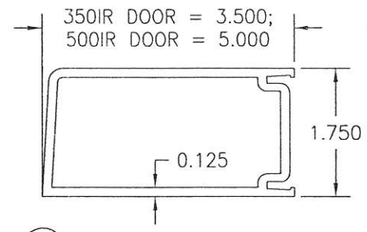

8 DOOR STILE (APPLICABLE WITH BUTT & PIVOT HINGES)

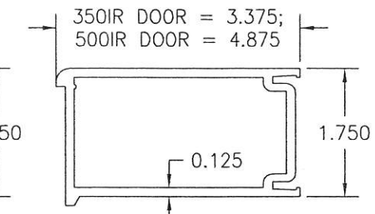

9 DOOR STILE (APPLICABLE WITH CONTINUOUS HINGE)

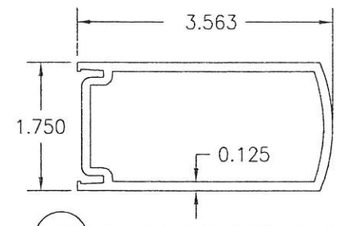

10A 350IR INACTIVE DOOR MEETING STILE (APPLICABLE WITH ALL LOCK/PANIC DEVICE OPTIONS WITH THE EXCEPTION OF CORBIN RUSSWIN ITEM #54)

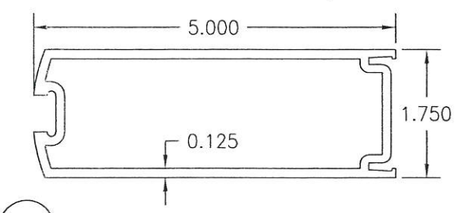

11B 500IR ACTIVE DOOR MEETING STILE (APPLICABLE WITH ALL LOCK/PANIC DEVICE OPTIONS)

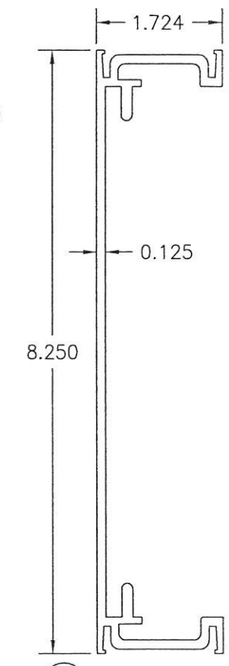

12 DOOR CROSS RAIL

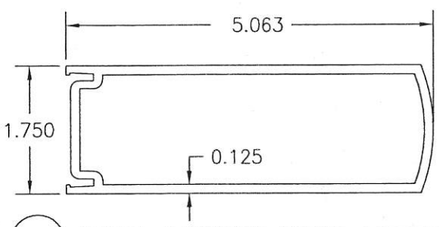

10B 500IR INACTIVE DOOR MEETING STILE (APPLICABLE WITH ALL LOCK/PANIC DEVICE OPTIONS)

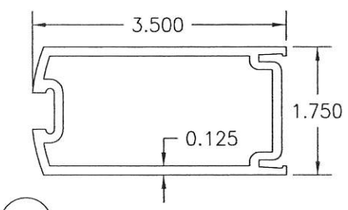

11A 350IR ACTIVE DOOR MEETING STILE (APPLICABLE WITH ALL LOCK/PANIC DEVICE OPTIONS WITH THE EXCEPTION OF CORBIN RUSSWIN ITEM #54)

DRAWN BY: W.R.M.	CHECKED BY: W.W.S.
PLOT: 1=2	DATE: 11/26/13

NO.	REVISION DESCRIPTION	BY	DATE

JOB INFORMATION:
KAWNEER COMPANY, INC.
555 GUTHRIDGE COURT
NORCROSS, GA 30092
770-449-5555

DRAWING TITLE
350IR OUT-SWING IMPACT DOOR

CONSULTANTS
W. W. SCHAEFER ENGINEERING & CONSULTING, P.A. (REG. NO. F-14980)
7460 150TH COURT NORTH
PALM BEACH GARDENS, FL 33418
PHONE: 561-744-3424

CERTIFICATION
MAR 21 2016
WARREN W. SCHAEFER, P.E.
P.E. NO. 113497

DRAWING NO.	REV.
1460T	A

SHEET NO.
11 OF 13

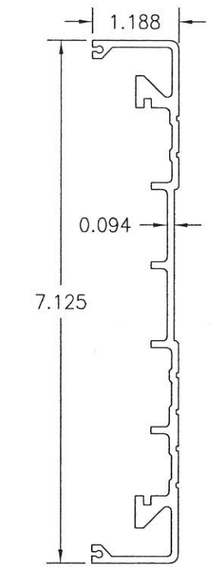

13 CROSS RAIL COVER

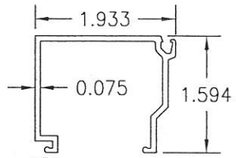

14 GLASS STOP (IR-500)

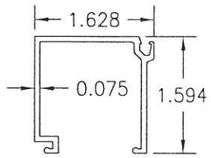

15 GLASS STOP (IR-501)

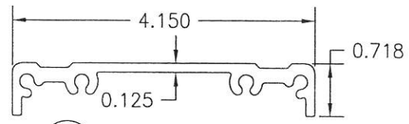

16A SHEAR BLOCK (TRIFAB 450)

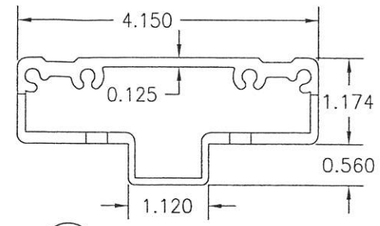

16B SHEAR BLOCK (TRIFAB 451)

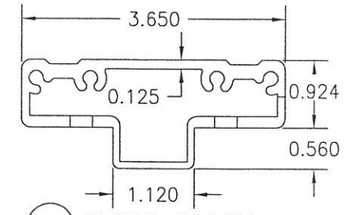

16C SHEAR BLOCK (IR-500/501)

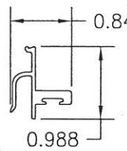

19A SIDE JAMB DOOR STOP

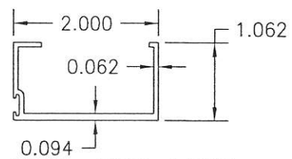

19B HEAD JAMB DOOR STOP (IR-500/501 & TRIFAB 451)

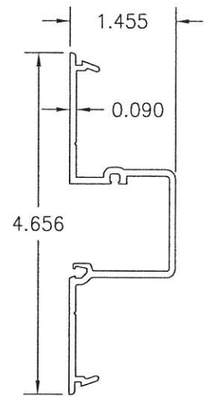

17 DEEP POCKET FILLER (IR-500)

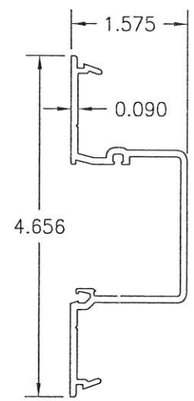

18 DEEP POCKET FILLER (IR-501)

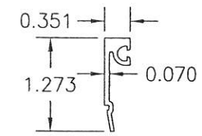

20A EXTERIOR DOOR MONOLITHIC GLASS STOP (APPLICABLE WITH GLAZING DETAIL 1)

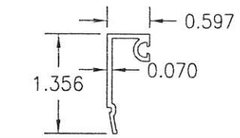

20B EXTERIOR DOOR MONOLITHIC GLASS STOP (APPLICABLE WITH GLAZING DETAIL 2)

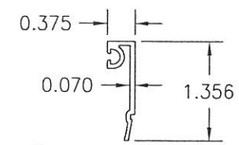

20C INTERIOR & EXTERIOR DOOR GLASS STOP (USED WITH GLAZING DETAIL 3)

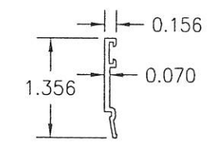

20D EXTERIOR DOOR I.G. GLASS STOP (APPLICABLE WITH GLAZING DETAIL 4 & 5)

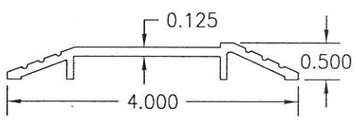

22 DOOR THRESHOLD

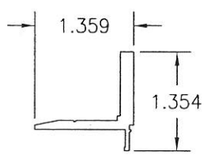

21 INTERIOR DOOR GLASS STOP

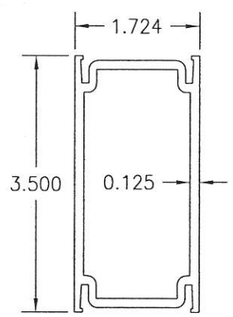

23 MID-RAIL

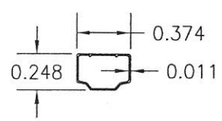

24 I.G. GLASS SPACER

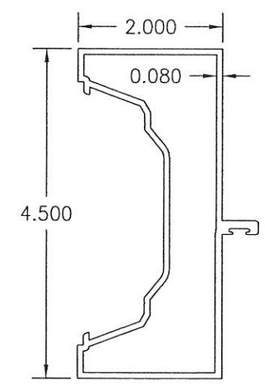

25 SIDE JAMB (TRIFAB 450/451)

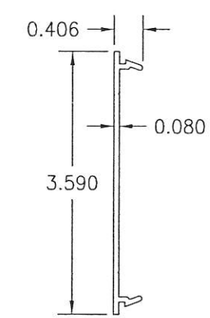

26 FLAT FILLER SHIM SUPPORT (TRIFAB 450/451)

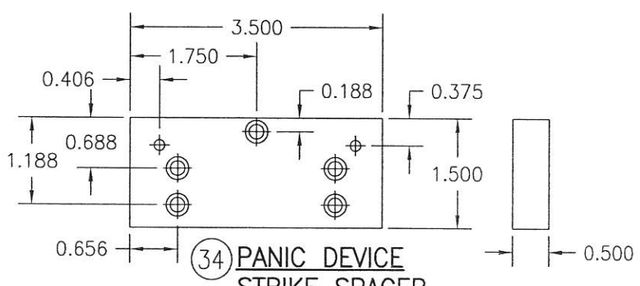

34 PANIC DEVICE STRIKE SPACER
(USED WITH CORBIN RUSSWIN ED5200S(A) PANIC DEVICE)

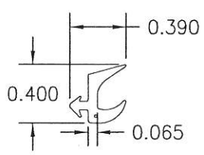

28A DOOR GLAZING GASKET (APPLICABLE WITH MONOLITHIC GLASS)

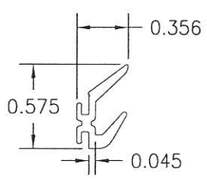

28B DOOR GLAZING GASKET (APPLICABLE WITH I.G. GLASS)

DRAWN BY: W.R.M.	CHECKED BY: W.W.S.
PLOT: 1=2	DATE: 11/26/13

NO.	REVISION DESCRIPTION	BY	DATE

JOB INFORMATION:
KAWNEER COMPANY, INC.
555 GUTHRIDGE COURT
NORCROSS, GA 30092
770-449-5555

DRAWING TITLE
350IR OUT-SWING IMPACT DOOR

CONSULTANTS
W. W. SCHAEFER ENGINEERING & CONSULTING, P.A. (REG. NO. F-14980)
7480 150TH COURT NORTH
PALM BEACH GARDENS, FL 33418
PHONE: 561-744-3424

CERTIFICATION
MAR 21 2016
WARREN W. SCHAEFER, P.E.
P.E. NO. 113497

DRAWING NO. 1460T
REV. A
SHEET NO. 12 OF 13

ITEM #	PART #	ITEM DESCRIPTION	MANUFACTURER/NOTES
		PARTS	
1A	575-022	HEAD JAMB (IR-500)	6063-T6 ALUMINUM
1B	575-162	ALTERNATE HEAD JAMB (IR-500/501)	6063-T6 ALUMINUM
2	575-122	HEAD JAMB (IR-501)	6063-T6 ALUMINUM
3A	450-502	HEAD JAMB (TRIFAB 450)	6063-T6 ALUMINUM
3B	451-079	HEAD JAMB (TRIFAB 451)	6063-T6 ALUMINUM
4	575-051	SIDE JAMB (IR 500-OR IR-501)	6063-T6 ALUMINUM
5	163-036	SIDE JAMB (1600 DR JB ADAPTOR)	6063-T6 ALUMINUM
6A	200-023	DOOR; TOP RAIL	6063-T6 ALUMINUM
6B	200-024	DOOR; TOP RAIL	6063-T6 ALUMINUM
7	200-032	DOOR; BOTTOM RAIL	6063-T6 ALUMINUM
8	200-005	DOOR STILE (APPLICABLE WITH BUTT & PIVOT HINGES)	6063-T6 ALUMINUM
9	200-012	DOOR STILE (APPLICABLE WITH CONTINUOUS HINGES)	6063-T6 ALUMINUM
10A	200-007	350IR INACTIVE DOOR MEETING STILE (APPLICABLE WITH ALL LOCK/PANIC DEVICE OPTIONS WITH THE EXCEPTION OF CORBIN RUSSWIN ITEM #54)	6063-T6 ALUMINUM
10B	200-010	500IR INACTIVE DOOR MEETING STILE (APPLICABLE WITH ALL LOCK/PANIC DEVICE OPTIONS)	6063-T6 ALUMINUM
11A	200-006	350IR ACTIVE DOOR MEETING STILE (APPLICABLE WITH ALL LOCK/PANIC DEVICE OPTIONS WITH THE EXCEPTION OF CORBIN RUSSWIN ITEM #54)	6063-T6 ALUMINUM
11B	200-009	500IR ACTIVE DOOR MEETING STILE (APPLICABLE WITH ALL LOCK/PANIC DEVICE OPTIONS)	6063-T6 ALUMINUM
12	233-013	DOOR CROSS RAIL	6063-T6 ALUMINUM
13	033-105	CROSS RAIL COVER	6063-T6 ALUMINUM
14	575-004	GLASS STOP (IR-500)	6063-T6 ALUMINUM
15	575-104	GLASS STOP (IR-501)	6063-T6 ALUMINUM
16A	450-103	SHEAR BLOCK (TRIFAB 450)	6063-T6 ALUMINUM
16B	451-141	SHEAR BLOCK (TRIFAB 451)	6063-T6 ALUMINUM
16C	400-140	SHEAR BLOCK (IR-500/501)	6063-T6 ALUMINUM
17	575-035	DEEP POCKET FILLER (IR-500)	6063-T6 ALUMINUM
18	575-135	DEEP POCKET FILLER (IR-501)	6063-T6 ALUMINUM
19A	450-520	SIDE JAMB DOOR STOP	6063-T6 ALUMINUM
19B	041-045	HEAD JAMB DOOR STOP (451 & 500/501)	6063-T6 ALUMINUM
20A	575-043	EXTERIOR DOOR MONOLITHIC GLASS STOP (APPLICABLE WITH GLAZING DETAIL 1)	6063-T6 ALUMINUM
20B	575-041	EXTERIOR DOOR MONOLITHIC GLASS STOP (APPLICABLE WITH GLAZING DETAIL 2)	6063-T6 ALUMINUM
20C	575-039	INTERIOR & EXTERIOR DOOR GLASS STOP (USED WITH GLAZING DETAIL 3)	6063-T6 ALUMINUM
20D	575-040	EXTERIOR DOOR I.G. GLASS STOP (APPLICABLE WITH GLAZING DETAIL 4 & 5)	6063-T6 ALUMINUM
21	575-045	INTERIOR DOOR GLASS STOP	6063-T6 ALUMINUM
22	069-139	DOOR THRESHOLD	6063-T6 ALUMINUM
23	200-058	MID-RAIL	6063-T6 ALUMINUM
24	200-058	I.G. GLASS SPACER	3005 OR 3105 ALUMINUM
25	451-064	SIDE JAMB (TRIFAB 450/451)	6063-T6 ALUMINUM
26	450-126	FLAT FILLER SHIM SUPPORT (TRIFAB 450/451)	6063-T6 ALUMINUM
		SEALS AND SEALANTS	
27	027-078	DOOR BULB WEATHERING	ALCRYN
28A	027-563	DOOR GLAZING GASKET (APPLICABLE WITH MONOLITHIC GLASS)	TREMCO TR-13536E EPDM DUROMETER 70 +/-5
28B	027-557	DOOR GLAZING GASKET (APPLICABLE WITH I.G. GLASS)	KRP 027-557 POLYPROPYLENE & SANTOPRENE DUROMETER 65 +/-5
29	127-041	GLAZING TAPE / SILICONE SPACER	SEMI-RIGID POLYURETHANE FOAM
30A	027-342	DOOR SETTING BLOCK (APPLICABLE WITH MONOLITHIC GLASS)	NEOPRENE
30B	027-059	DOOR SETTING BLOCK (APPLICABLE WITH I.G. GLASS)	NEOPRENE
31	200-795	DOOR BOTTOM RAIL WEATHER SWEEP	VARIED
32	200-497	ADJUSTABLE ASTRAGAL WEATHERING	VARIED

ITEM #	PART #	ITEM DESCRIPTION	MANUFACTURER/NOTES
		SEALS & SEALANTS CONT'D	
33	–	COMPRESSION TAPE	3M
		HARDWARE	
34	966-193	PANIC DEVICE STRIKE SPACER	ALUMINUM; USED W/LOCK ITEM #54
36	050-821	CONTINUOUS GEAR HINGE	HAGER/ROTON
37	037-232	BUTT HINGE	HAGER
38	050-322	TOP OFFSET PIVOT HINGE	KAWNEER
	050-331	INTERMEDIATE OFFSET PIVOT HINGE	
	050-326	RH BOTTOM OFFSET PIVOT HINGE	
	050-327	LH BOTTOM OFFSET PIVOT HINGE	
39	–	ACTIVE DOOR LOCK ASSEMBLY	ADAMS-RITE 1850 3-POINT LOCK SYSTEM WITH KAWNEER'S CYLINDER,
40	50-079	INACTIVE DOOR TOP FLUSH BOLT	ADAMS-RITE 1850 FLUSH BOLT SYSTEM WITH KAWNEER'S PUSH PACKAGE
	50-075	INACTIVE DOOR BOTTOM FLUSH BOLT	
41	–	ACTIVE DOOR LOCK ASSEMBLY	ADAMS-RITE MS 1850 3-POINT LOCK SYSTEM WITH KAWNEER'S CYLINDER, THUMBTURN & PUSH PACKAGE
42	–	INACTIVE DOOR LOCK ASSEMBLY	ADAMS-RITE 2180 2-POINT LOCK SYSTEM WITH KAWNEER'S PUSH PACKAGE
45		CONCEALED ROD EXIT/PANIC DEVICE	JACKSON 2086
46	–	CONCEALED ROD EXIT/PANIC DEVICE	KAWNEER 1686
47	–	CONCEALED ROD EXIT/PANIC DEVICE	SARGENT 8400
48	–	CONCEALED ROD EXIT/PANIC DEVICE	PANELINE CR-90
49	–	CONCEALED ROD EXIT/PANIC DEVICE	SARGENT AD8400
50	–	CONCEALED ROD EXIT/PANIC DEVICE	VON DUPRIN HH9947
51	–	CONCEALED ROD EXIT/PANIC DEVICE	CALIBRE 9100
52	–	CONCEALED ROD EXIT/PANIC DEVICE	ADAMS RITE G86
53	–	CONCEALED ROD EXIT/PANIC DEVICE	FALCON HH1690
54	–	RIM PANIC DEVICE WITH KEYED REMOVABLE MULLION	CORBIN RUSSWIN ED5200S(A)
		MISCELLANEOUS FASTENERS	
55	–	NO. 12 X 2" SCREW	3" FROM ENDS & MAX. 11" O.C.
56	–	NO. 12-24 X 9/16" S.S SCREW	8 PER HINGE
57	–	NO. 12-24 X 13/32" SCREW	2 9/16" FROM ENDS & MAX. 5 1/8" O.C. (52 MAX. PER HINGE)
58	–	5/16"-18 X 5/8" SCREW	2 PER TOP PIVOT HINGE
59	–	NO. 12-24 X 9/16" S.S SCREW	2 PER INTERMEDIATE PIVOT HINGE
60	–	1/4-20 X 3/8" SCREW	3 PER BOTTOM PIVOT HINGE
61	–	NO. 6 X 11/16" SCREW	10 PER LEAF
62	–	NO. 10 X 9/16" S.S SCREW	2 PER CLIP
63	–	NO. 10 X 1 19/32" S.S. SCREW	4 PER CLIP
64	–	NO. 10 X 1/2" S.S. SCREW	3" FROM ENDS & MAX. 7 1/2" O.C. AT TOP & BOTTOM RAILS – 3" FROM ENDS & MAX. 11 1/8" O.C. AT STILES
65	–	NO. 6 X 3/4" S.S. SCREW	1/4" FROM ENDS & MAX. 9 17/32" O.C.
66	–	NO. 10 X 1 5/8" FHTF "B" SCREW	1" FROM ENDS & MAX. 16" O.C.

DRAWN BY: W.R.M.
CHECKED BY: W.W.S.
PLOT: 1=2
DATE: 11/26/13

NO.	REVISION DESCRIPTION	BY	DATE

JOB INFORMATION:
KAWNEER COMPANY, INC.
555 GUTHRIDGE COURT
NORCROSS, GA 30092
770-449-5555

DRAWING TITLE
350IR OUT-SWING IMPACT DOOR

CONSULTANTS
W. W. SCHAEFER ENGINEERING & CONSULTING, P.A. (REG. NO. F-14980)
7480 150TH COURT NORTH
PALM BEACH GARDENS, FL 33418
PHONE: 561-744-3424

CERTIFICATION
MAR 21 2016
WARREN W. SCHAEFER, P.E.
P.E. NO. 113497

DRAWING NO. 1460T
REV. A
SHEET NO. 13 OF 13