Alside BECAUSE LIFE IS FOR LIVING®

3773 STATE ROAD, CUYAHOGA FALLS, OH 44223

MODEL 6200
EXTRUDED VINYL
SLIDING PATIO DOORS
"NON-IMPACT"

ALSO DISTRIBUTED UNDER THE FOLLOWING TRADE NAMES:

ASSOCIATED MATERIALS, INC.
GENTEK BUILDING PRODUCTS
REVERE BUILDING PRODUCTS

EVALUATED FOR USE IN THE STATE OF TEXAS

The Alside Vinyl Sliding Patio Door described herein complies with the 2006 International Residential Code (IRC), Sections R301 & R613 and the 2006 International Building Code (IBC), Sections 1405.12, 1609, 1714.5, 2403 and 2404 (including Texas revisions) subject to the following conditions:

1. Anchors shall be as listed and spaced as shown in the details. Anchor embedment to base material shall be beyond wall dressing or stucco.
2. When used in areas requiring wind-borne debris protection this product is required to be protected with an impact resistant covering that complies with Section R301.2.1.2 of the IRC and Section 1609.1.2 of the IBC.
3. Allowable design pressure requirements must be equal to or less than the design pressure rating shown in the design pressure chart, sheet 1 of this drawing.
4. Conditions not covered by this drawing are subject to further engineering analysis.

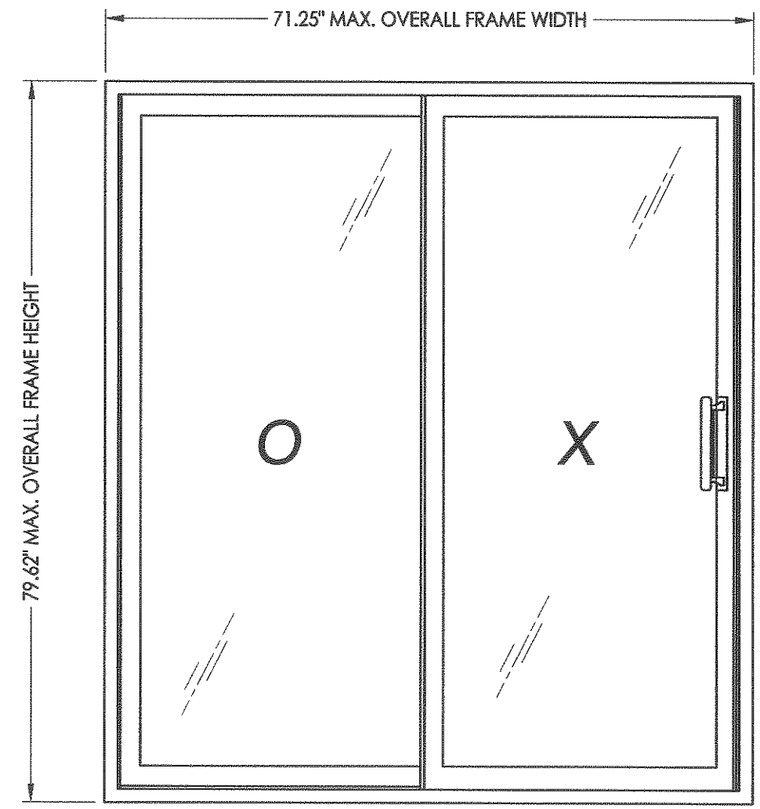

OVERALL FRAME DIMENSION	MAX. PANEL DIMENSION	MAX. D.L.O. DIMENSION	GLASS TYPE	DESIGN PRESSURE (PSF)	
				POSITIVE	NEGATIVE
71.25" X 79.62"	35.62" X 76.25"	30.00" x 71.65"	G1	+50.0	-50.0

TABLE OF CONTENTS

SHEET#	DESCRIPTION
1	Typical elevations, design pressures & general notes
2	Horizontal and vertical cross sections
3	Bill of materials, glazing detail & components

STATE OF TEXAS LYNDON F. SCHMIDT 104123 LICENSED PROFESSIONAL ENGINEER 7-3-11

Documents Prepared By: Lyndon F. Schmidt, P.E. TEXAS P.E. #104123
RW BUILDING CONSULTANTS, INC.
P.O. Box 230 Valrico FL. 33595
Phone No.: 813.659.9197
TEXAS BOARD OF PROFESSIONAL ENGINEERS CERTIFICATE OF REGISTRATION # F-11852

PRODUCT: EXTRUDED VINYL SLIDING PATIO DOORS

PART OR ASSEMBLY: TYPICAL ELEVATION, DESIGN PRESSURES & GENERAL NOTES

NO.	DATE	BY

REVISIONS

DATE: 7/11/11
SCALE: N.T.S.
DWG. BY: JK
CHK. BY: LFS
DRAWING NO.: TX-4125
SHEET 1 OF 3

© 2011 R.W. BUILDING CONSULTANTS INC.

R:\A - Projects\Project Folders\proj 1401-1500\PF 1457\D. RWBC Drawings\FL-12320\TX-4122.dwg, TX-4125

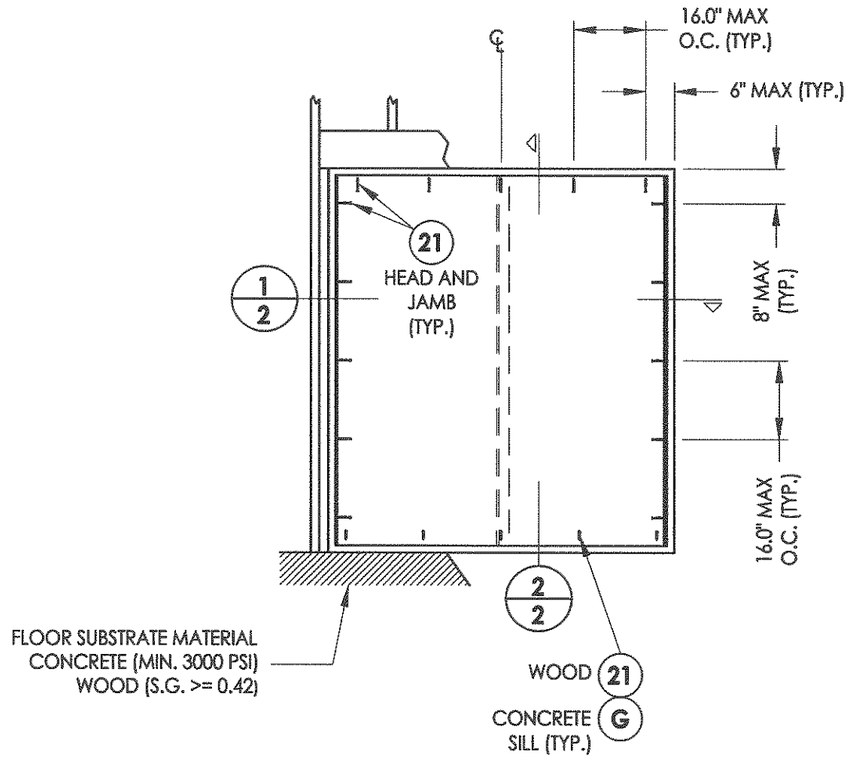

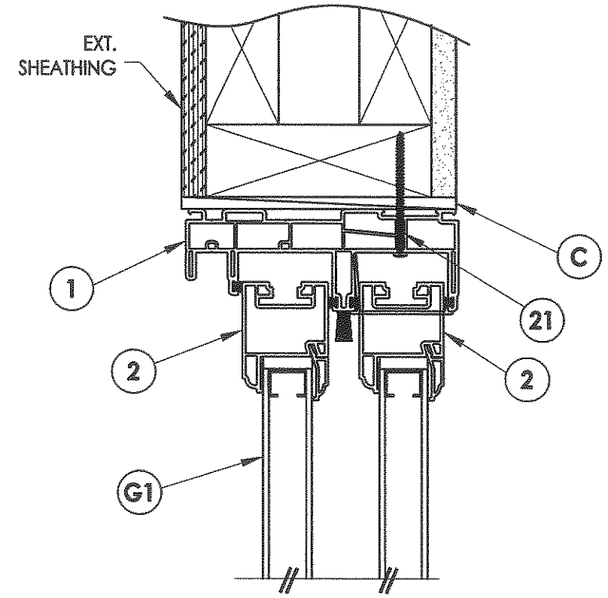

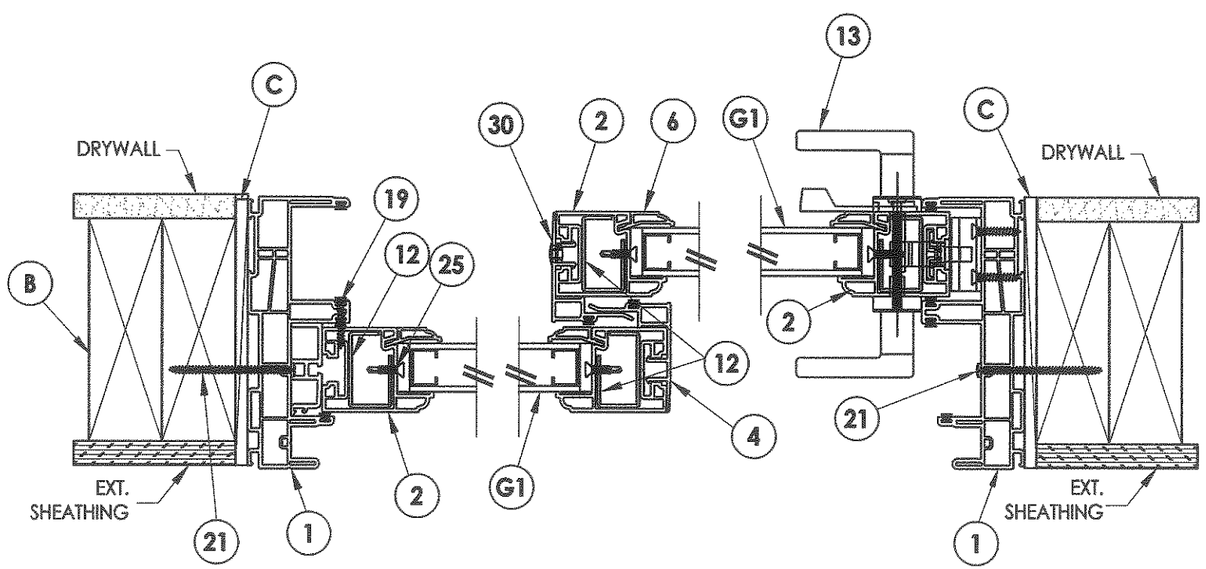

1/2 HORIZONTAL CROSS SECTION

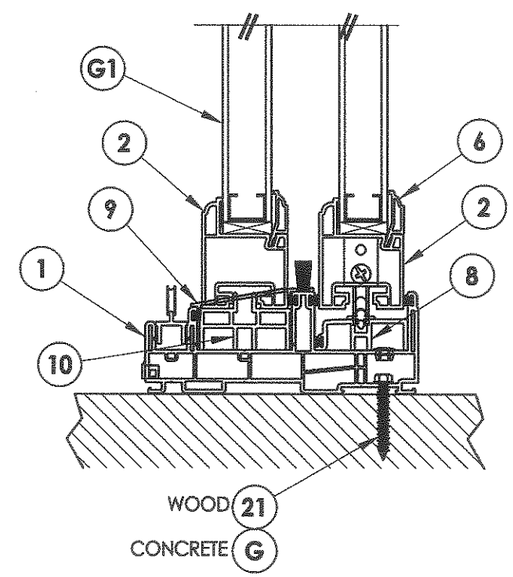

2/2 VERTICAL CROSS SECTION

STATE OF TEXAS
LYNDON F. SCHMIDT
104128
LICENSED PROFESSIONAL ENGINEER
7-13-11

Documents Prepared By: Lyndon F. Schmidt, P.E.
TEXAS P.E. #104123

RW BUILDING CONSULTANTS, INC.
P.O. Box 230 Valrico FL. 33595
Phone No.: 813.659.9197

TEXAS BOARD OF PROFESSIONAL ENGINEERS
CERTIFICATE OF REGISTRATION # F-11852

PRODUCT: EXTRUDED VINYL SLIDING PATIO DOORS

PART OR ASSEMBLY: HORIZONTAL & VERTICAL CROSS SECTIONS

NO.	DATE	REVISIONS	BY

DATE: 7/11/11
SCALE: N.T.S.
DWG. BY: JK
CHK. BY: LFS
DRAWING NO.: TX-4125
SHEET 2 OF 3

© 2011 R.W. BUILDING CONSULTANTS INC.

R:\A - Projects\Project Folders\proj 1401-1500\PF 1457\D. RWBC Drawings\FL-12320\TX-4122.dwg, 2-4

BILL OF MATERIALS		
ITEM	DESCRIPTION	MATERIAL
B	2X FRAMING SG ≥ 0.42	WOOD
F	SHEATHING	WOOD
G	1/4" X 1-3/4" ELCO OR ITW CONCRETE SCREW	STEEL
1	EXTRUDED VINYL HEAD / SILL & JAMB / FRAME (#PD1201)	* RIGID PVC
2	EXTRUDED VINYL STILE / RAIL SASH (#PD25)	* RIGID PVC
4	SNAP ON MEETING RAIL (SO80)	* RIGID PVC
6	EXTRUDED VINYL 1" GLAZING BEAD (#BV22)	* RIGID PVC
7	GLAZING SPACER	-
8	ALUMINUM SILL TRACK (#PD22)	ALUMINUM
10	SUPPORT BLOCK	* RIGID PVC
12	SASH REINFORCEMENT ROLL FORMED STEEL	STEEL
13	HANDLE AND LOCK (ALLURE SERIES BY TRUTH)	
18	PURFECT GLAZE 34-937A SEALANT BY NATIONAL ADHESIVES	SEALANT
19	#6 X 1 PFH SMS	STEEL
21	#8 X 2-1/2" PPH SMS	STEEL
25	#8 X 3/4" PFH SELF SELF DRILLING SCREWS	STEEL
29	SILICONE SEALANT (NOVAFLEX) BY NOVAGUARD	SILICONE
30	HOLE PLUGS BY ASHLAND (I 3034)	PLASTIC

* THE APPROVED WHITE RIGID PVC EXTERIOR EXTRUSIONS FOR WINDOWS ARE TO BE PRODUCED BY EXTRUDERS LICENSEES IN "AAMA CERTIFICATION PROGRAMS FOR RIGID PVC EXTRUSIONS".

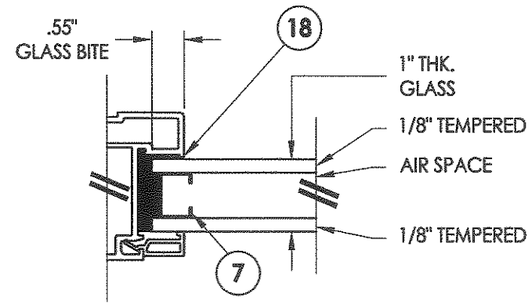

G1 GLAZING DETAIL

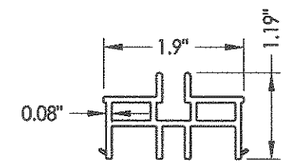

10 SUPPORT BLOCK
Extruded vinyl

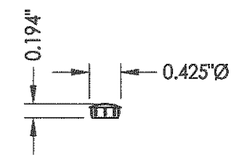

30 HOLE PLUG

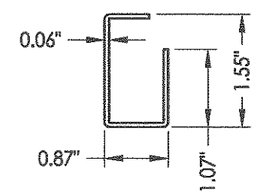

12 SASH REINFORCEMENT
Roll formed steel

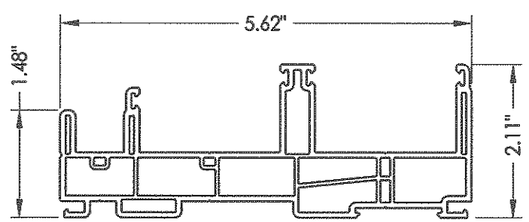

1 HEAD / SILL / JAMB
Extruded vinyl

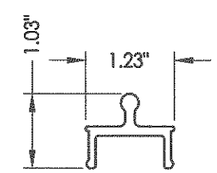

28 SCREEN TRACK
Extruded vinyl

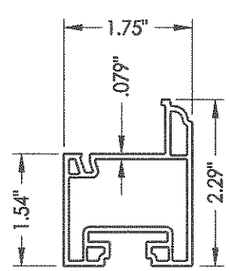

2 STILE / RAIL
Extruded vinyl

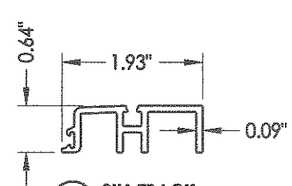

8 SILL TRACK
Alum

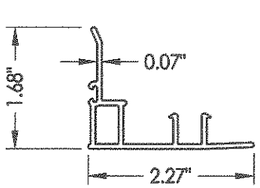

4 SNAP ON MEETING RAIL
Extruded vinyl

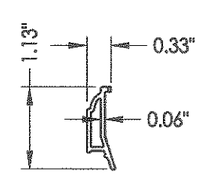

6 GLAZING BEAD
Extruded vinyl

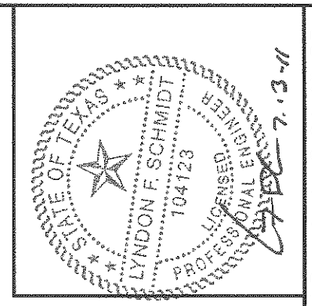

Documents Prepared By: Lyndon F. Schmidt, P.E.
TEXAS P.E. #104123
RW BUILDING CONSULTANTS, INC.
P.O. Box 230 Valrico FL. 33595
Phone No.: 813.659.9197
TEXAS BOARD OF PROFESSIONAL ENGINEERS
CERTIFICATE OF REGISTRATION # F-11852

PRODUCT: EXTRUDED VINYL SLIDING PATIO DOORS

PART OR ASSEMBLY: BILL OF MATERIALS, GLAZING DETAIL & COMPONENTS

NO.	DATE	BY

REVISIONS

DATE: 7/11/11
SCALE: N.T.S.
DWG. BY: JK
CHK. BY: LFS
DRAWING NO.: TX-4125
SHEET 3 OF 3

R:\A - Projects\Project Folders\proj 1401-1500\PF 1457\D. RWBC Drawings\FL-12320\TX-4122.dwg, 3-4