NATIONAL CUSTOM HOLLOW METAL DOOR & FRAMES

OUTSWING FLUSH STEEL COMMERCIAL DOOR

INSTALLATION NOTES:

1. ONE (1) INSTALLATION ANCHOR IS REQUIRED AT EACH ANCHOR LOCATION SHOWN.
2. THE NUMBER OF INSTALLATION ANCHORS DEPICTED IS THE MINIMUM NUMBER OF ANCHORS TO BE USED FOR PRODUCT INSTALLATION.
3. INSTALL INDIVIDUAL INSTALLATION ANCHORS WITHIN A TOLERANCE OF ±1/2 INCH OF THE DEPICTED LOCATION IN THE ANCHOR LAYOUT DETAIL (I.E., WITHOUT CONSIDERATION OF TOLERANCES). TOLERANCES ARE NOT CUMULATIVE FROM ONE INSTALLATION ANCHOR TO THE NEXT.
4. SHIM AS REQUIRED AT EACH INSTALLATION ANCHOR WITH LOAD BEARING SHIM(S). MAXIMUM ALLOWABLE SHIM STACK TO BE 1/4 INCH. SHIM WHERE SPACE OF 1/16 INCH OR GREATER OCCURS. SHIM(S) SHALL BE CONSTRUCTED OF HIGH DENSITY PLASTIC OR BETTER.
5. FOR INSTALLATION INTO CONCRETE OR GROUT FILLED CMU, USE 3/8" DYNABOLT SLEEVE ANCHORS OF SUFFICIENT LENGTH TO ACHIVE A MINIMUM EMBEDMENT OF 1-1/2".
6. FOR INSTALLATION INTO 2X WOOD BUCK, USE 3/8" LAG SCREWS SAE GRADE 5 TYPE ANCHORS OF SUFFICIENT LENGTH TO ACHIEVE A MINIMUM EMBEDMENT OF 3".
7. MINIMUM EMBEDMENT AND EDGE DISTANCE EXCLUDE WALL FINISHES, INCLUDING BUT NOT LIMITED TO STUCCO, FOAM, BRICK VENEER, AND SIDING.
8. INSTALLATION ANCHORS AND ASSOCIATED HARDWARE MUST BE MADE OF CORROSION RESISTANT MATERIAL OR HAVE A CORROSION RESISTANT COATING.
9. FOR GROUT FILLED BLOCK, DO NOT INSTALL INSTALLATION ANCHORS INTO MORTAR JOINTS. EDGE DISTANCE IS MEASURED FROM FREE EDGE OF BLOCK OR EDGE OF MORTAR JOINT INTO FACE SHELL OF BLOCK.
10. INSTALLATION ANCHORS SHALL BE INSTALLED IN ACCORDANCE WITH ANCHOR MANUFACTURER'S INSTALLATION INSTRUCTIONS, AND ANCHORS SHALL NOT BE USED IN SUBSTRATES WITH STRENGTHS LESS THAN THE MINIMUM STRENGTH SPECIFIED BY THE ANCHOR MANUFACTURER.
11. INSTALLATION ANCHOR CAPACITIES FOR PRODUCTS HEREIN ARE BASED ON SUBSTRATE MATERIALS WITH THE FOLLOWING PROPERTIES:
    A. WOOD - MINIMUM SPECIFIC GRAVITY OF 0.42.
    B. CONCRETE -MINIMUM COMPRESSIVE STRENGTH OF 3000 PSI.
    C. MASONRY - CMU CONFORMS TO ASTM C-90 AND GROUT CONFORMS TO ASTM C 476

GENERAL NOTES:

1. THE PRODUCT SHOWN HEREIN IS DESIGNED AND MANUFACTURED TO COMPLY WITH THE 2006 INTERNATIONAL BUILDING CODE (IBC) AND INTERNATION RESIDENTIAL CODE (IRC) WITH 2006 TEXAS REVISION, EFFECTIVE JANUARY 1, 2008 AND HAS BEEN EVALUATED ACCORDING TO THE FOLLOWING:
   - ASTM E 330-02
   - ASTM E1886-05
   - ASTM E1996-09
   - ANSI/SDI A250.13-2003
2. ADEQUACY OF THE EXISTING STRUCTURAL CONCRETE/MASONRY AND 2X FRAMING AS A MAIN WIND FORCE RESISTING SYSTEM CAPABLE OF WITHSTANDING AND TRANSFERRING APPLIED PRODUCT LOADS TO THE FOUNDATION IS THE RESPONSIBILITY OF THE ENGINEER OR ARCHITECT OF RECORD FOR THE PROJECT OF INSTALLATION.
3. 1X AND 2X BUCKS (WHEN USED) SHALL BE DESIGNED AND ANCHORED TO PROPERLY TRANSFER ALL LOADS TO THE STRUCTURE. BUCK DESIGN AND ANCHOR LAYOUT IS THE RESPONSIBILITY OF THE ENGINEER OR ARCHITECT OF RECORD FOR THE PROJECT OF INSTALLATION.
4. THE INSTALLATION DETAILS DESCRIBED HEREIN ARE GENERIC AND MAY NOT REFLECT ACTUAL CONDITIONS FOR A SPECIFIC SITE. IF SITE CONDITIONS CAUSE INSTALLATION TO DEVIATE FROM THE REQUIREMENTS DETAILED HEREIN, A LICENSED ENGINEER OR ARCHITECT SHALL PREPARE SITE SPECIFIC DOCUMENTS FOR USE WITH THIS DOCUMENT.
5. THIS PRODUCT IS LARGE AND SMALL MISSILE IMPACT RESISTANT APPROVED IMPACT PROTECTIVE SYSTEM **IS NOT REQUIRED** ON THIS PRODUCT IN AREAS REQUIRING IMPACT RESISTANCE.
6. DOOR PANEL MATERIAL: 16 GA. A60 GALVANIZED STEEL (0.063" MIN.) DOOR FRAME MATERIAL: SINGLE UNITS - 16 GA. A60 GALV. STEEL (0.063" MIN.) PAIR UNITS - 14 GA. A60 GALV. STEEL (0.078" MIN.)
7. DESIGNATIONS "X" AND "O" STAND FOR THE FOLLOWING:
   X: ACTIVE PANEL
   O: INACTIVE PANEL

STEEL DOOR CONSTRUCTION:

THE OVERALL PANEL THICKNESS IS 1 3/4 INCH THICK. THE DOOR LEAF IS CONSTRUCTED FROM 16 GA. (0.063") A60 GALVANIZED STEEL SHEETS. VERTICAL 22 GA. STEEL HAT CHANNEL STIFFENERS ARE LOCATED 6" FROM EACH END AND 6" ON CENTER. STEEL HAT CHANNEL STIFFENERS ARE SPOT WELDED TO EACH DOOR FACE SHEET WITH ENDS OF THE STIFFENERS WELDED TOGETHER. VERTICAL EDGES OF THE DOOR LEAF SHEETS ARE SPOT WELDED BETWEEN HARDWARE REINFORCEMENTS TO 14 GA. FULL LENGTH CHANNEL AND ARE CONTINUOUSLY ARC WELDED TOGETHER. TOP AND BOTTOM CHANNELS ARE 16 GA. STEEL AND ARE WELDED TO EACH FACE SHEET 3" O.C. OPTIONAL FLUSHING CHANNELS ARE 18 GA. STEEL AND ARE LOCATED AT TOP AND BOTTOM RAILS. HINGE REINFORCEMENTS ARE LOCATED AT EACH HINGE LOCATION AND ARE 7. GA. STEEL TABS. LATCHING AND EXIT DEVICE HARDWARE REINFORCEMENTS ARE USED WHEN APPLICABLE.

DESIGN PRESSURES				
CONFIGURATION	LATCHING HARDWARE TYPE	*WHERE WATER INFILTRATION IS NOT REQUIRED OR IS PROTECTED BY OVERHANG	WHERE WATER INFILTRATION REQUIREMENT IS NEEDED OR IS NOT PROTECTED BY OVERHANG	MISSILE IMPACT RATING
SINGLE	CYLINDRICAL LOCKSET	+/- 70 PSF	NOT APPROVED	LARGE AND SMALL MISSILE IMPACT RATED
SINGLE	MORTISE LOCKSET WITH DEADBOLT	+/- 70 PSF		
SINGLE	RIM EXIT DEVICE	+/- 70 PSF		
PAIR	CYLINDRICAL LOCK X SURFACE BOLTS	+/- 70 PSF		
PAIR	MORTISE WITH DEAD BOLT X SURFACE BOLTS	+/- 70 PSF		
PAIR	RIM EXIT DEVICES WITH REMOVABLE MULLION	+/- 70 PSF		
PAIR	CONCEALED X CONCEALED, SURFACE X SURFACE, OR CONCEALED X SURFACE VERTICAL RODS	+/- 70 PSF		

*NOTE: UNIT SHALL BE INSTALLED AT LOCATION PROTECTED BY OVERHANG SUCH THAT OVERHANG RATIO (OH) = OH LENGTH /OH HEIGHT GREATER THAN 1.

TABLE OF CONTENTS

SHEET	SHEET DESCRIPTION
1	INSTALLATION & GENERAL NOTES
2	ELEVATIONS
3	ANCHOR LAYOUTS & NOTES
4	VERTICAL SECTIONS
5	HORIZONTAL SECTIONS
6	HORIZONTAL SECTIONS
7	STIFFENER DETAILS & HORIZONTAL SECTION
8	BILL OF MATERIALS & COMPONENTS

FRAME CONSTRUCTION:

THE DOOR FRAMES ARE CONSTRUCTED FROM 16 GAUGE (0.063") FOR SINGLE UNITS AND 14 GAUGE (0.078") FOR PAIR UNITS A60 GALVANIZED STEEL. FRAME PIECES ARE WELDED TOGETHER IN ACCORDANCE WITH HMMA 861-06. FRAMES ARE PREPPED WITH PIPE ANCHOR STRAPS OF EQUIVALENT GAUGE THICKNESS TO THE FRAME AT EACH ANCHOR LOCATION WELDED IN PLACE. 3/16" X 10" 7 GA. HINGE REINFORCEMENT IS LOCATED AT EACH HINGE LOCATION. LOCK STRIKE REINFORCEMENTS ARE USED WHEN APPLICABLE.

Digitally signed by Hermes F Norero, P.E.
Reason: I am approving this document
Date: 2016.01.31 20:36:22 -05'00'

NATIONAL
CUSTOM HOLLOW METAL DOORS & FRAMES

1701 EAST 22ND ST.
LITTLE ROCK, AR 72206

PH: 501-372-3441 FX: 501-375-3070

TITLE: OS FLUSH STEEL DOOR INSTALLATION & GENERAL NOTES

PREPARED BY:
BUILDING DROPS, INC.
398 E DANIA BEACH BLVD., # 338
DANIA BEACH, FL 33004
PH: (954) 399-8478 FX: (954) 744-4738

REVISIONS

NO.	DESCRIPTION	BY	DATE
A	UPDATED TABLE OF CONTENTS	MS	4.25.11
B	DP TABLE HARDWARE SPECS REVISED	SM	12.22.15

STATE OF TEXAS — HERMES F. NORERO — 118471 — LICENSED PROFESSIONAL ENGINEER

DATE: 4.20.11
DWN BY: MSS
CHK BY: HN
SCALE: NTS

DWG #: NCHM002

SHEET: 1 OF 8

12/22/2015 4:58 PM
s:\projects\national hollow metal door\td4-15-04929 product evalution revision\dwgs\nchm002.dwg

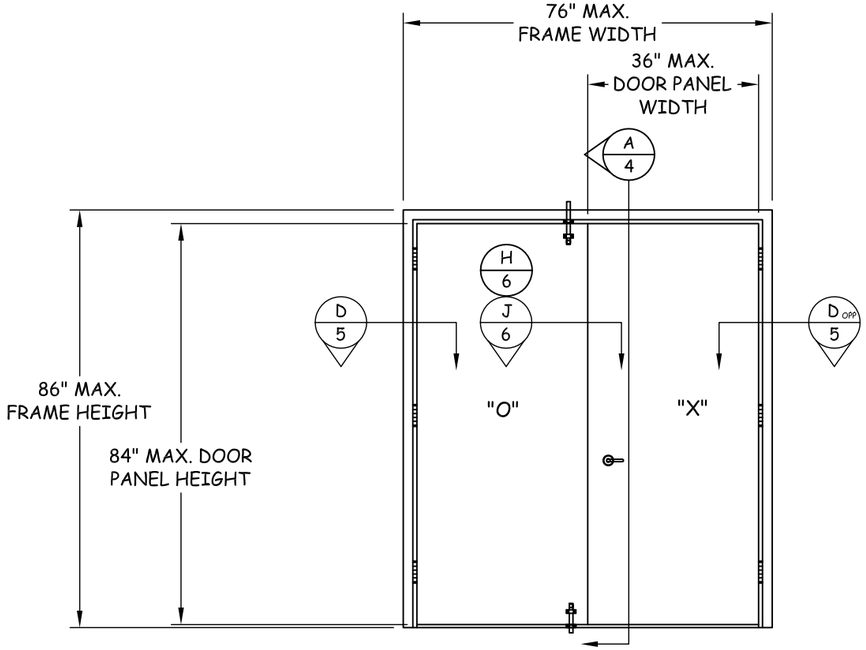

ELEVATION A

CYLINDRICAL LOCK (AS SHOWN) OR MORTISE LOCKSET WITH DEAD BOLT (NOT SHOWN) ON ACTIVE PANEL , SURFACE BOLTS ON INACTIVE

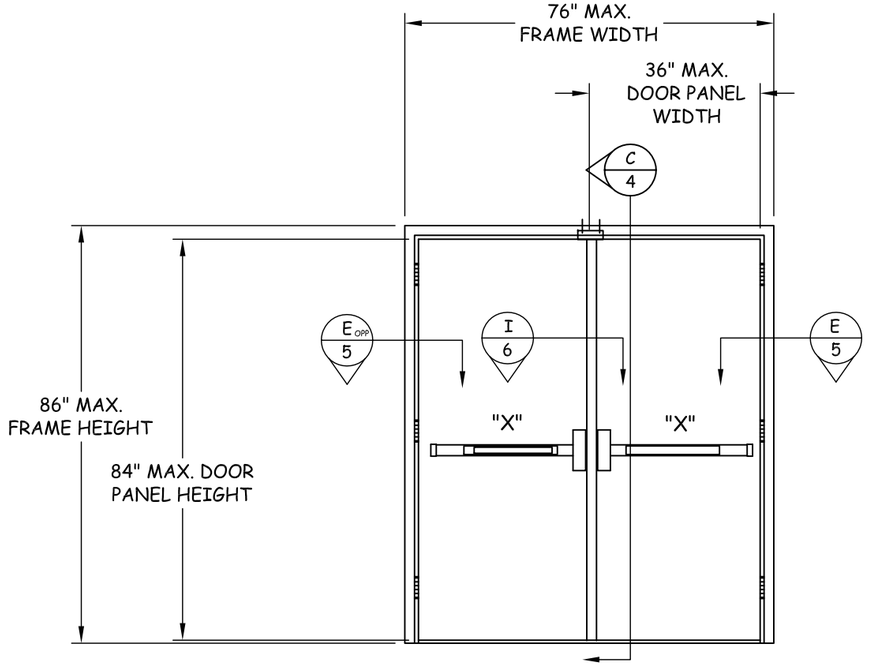

ELEVATION B

RIM EXIT DEVICES WITH REMOVABLE MULLION

NOTE: MAXIMUM FRAME HEIGHT TO BE 88" WHEN COMPONENT 1A, OPTIONAL HEADER FRAME, IS USED.

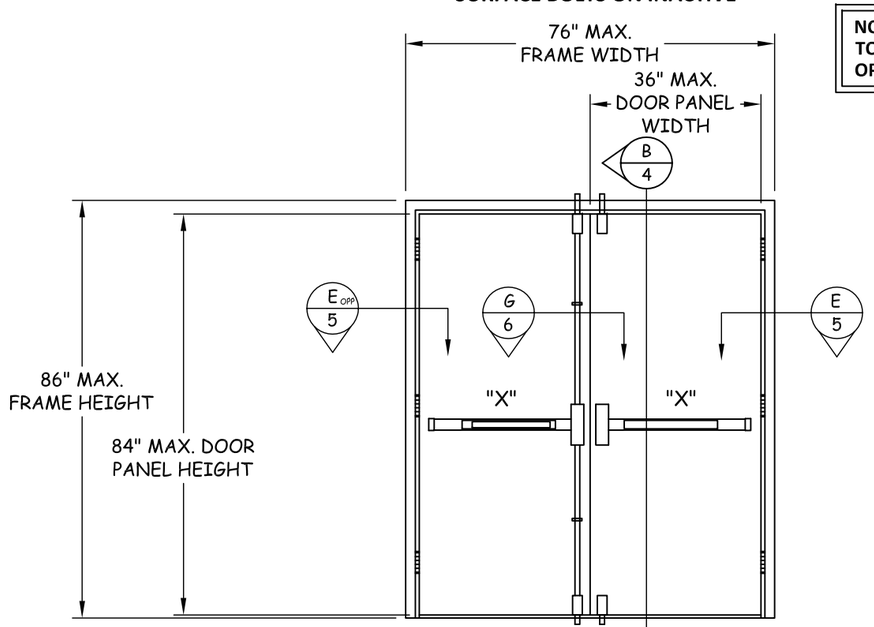

ELEVATION C

RIM EXIT DEVICES WITH CONCEALED VERTICAL RODS OR SURFACE VERTICAL RODS

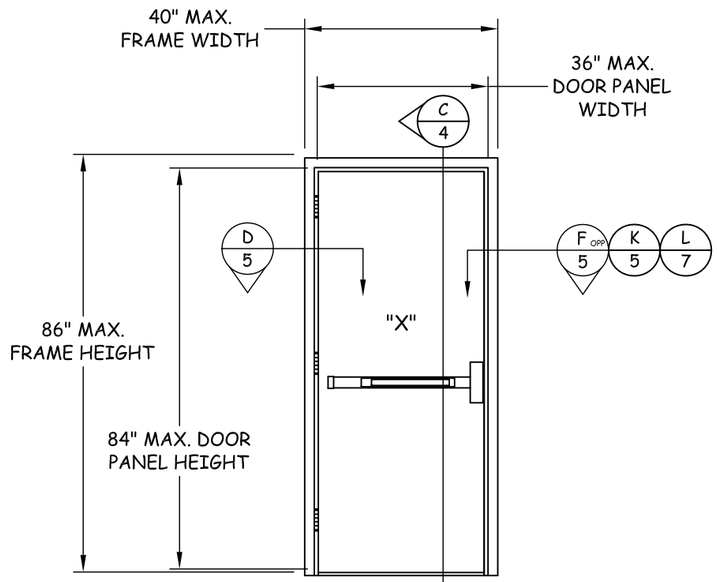

NOTE: ALTERNATE QUALIFIED SINGLE DOOR HARDWARE OPTIONS INCLUDE CYLINDRICAL LOCK OR MORTISE LOCKSETS WITH DEADBOLT.

ELEVATION D

RIM EXIT DEVICE

NATIONAL
CUSTOM HOLLOW METAL DOORS & FRAMES

1701 EAST 22ND ST.
LITTLE ROCK, AR 72206

PH: 501-372-3441 FX: 501-375-3070

TITLE: OS FLUSH STEEL DOOR ELEVATIONS

PREPARED BY:
BUILDING DROPS, INC.
398 E DANIA BEACH BLVD., # 338
DANIA BEACH, FL 33004
PH: (954) 399-8478 FX: (954) 744-4738

REVISIONS

NO.	DESCRIPTION	BY	DATE
A	ELEVATION C HARDWARE UPDATED	SM	12.22.15

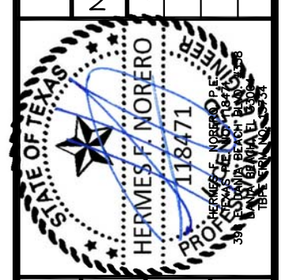

DATE: 4.20.11
DWN BY: MSS
CHK BY: HN
SCALE: NTS

DWG #: NCHM002

SHEET: 2 OF 8

12/22/2015 4:58 PM
s:\projects\national hollow metal door\tdl-15-0929 product evaluation revision\dwgs\nchm002.dwg

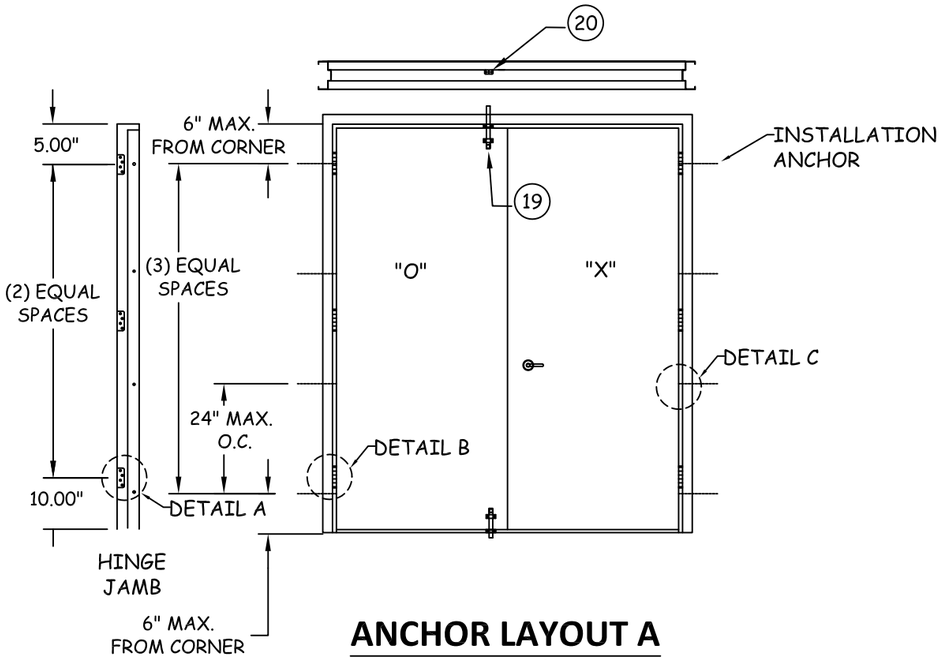

ANCHOR LAYOUT A

CYLINDRICAL LOCK (AS SHOWN) OR MORTISE LOCKSET WITH DEAD BOLT (NOT SHOWN) ON ACTIVE PANEL, SURFACE BOLTS ON INACTIVE

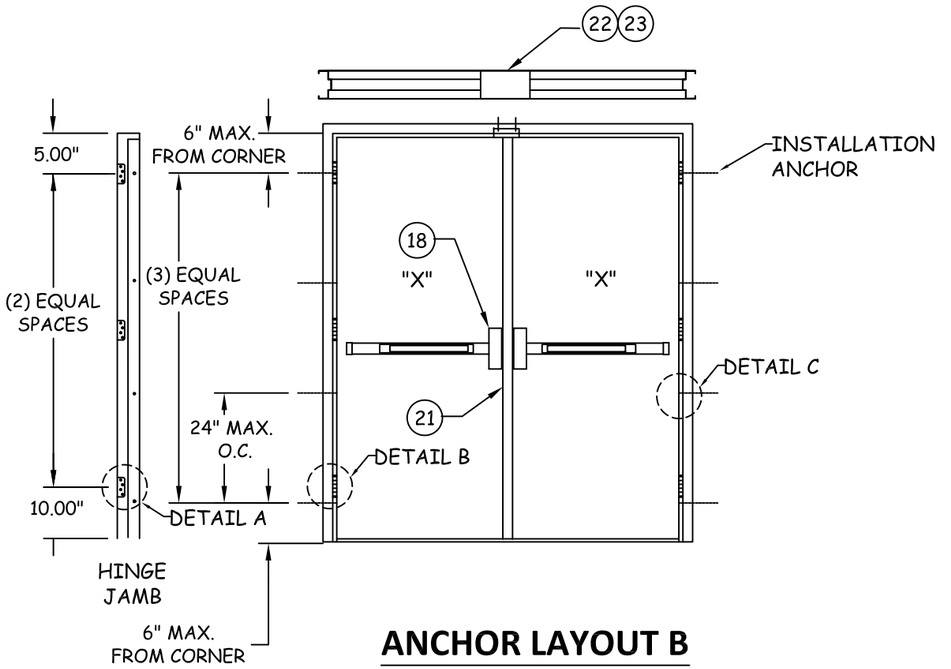

ANCHOR LAYOUT B

RIM EXIT DEVICES WITH REMOVABLE MULLION

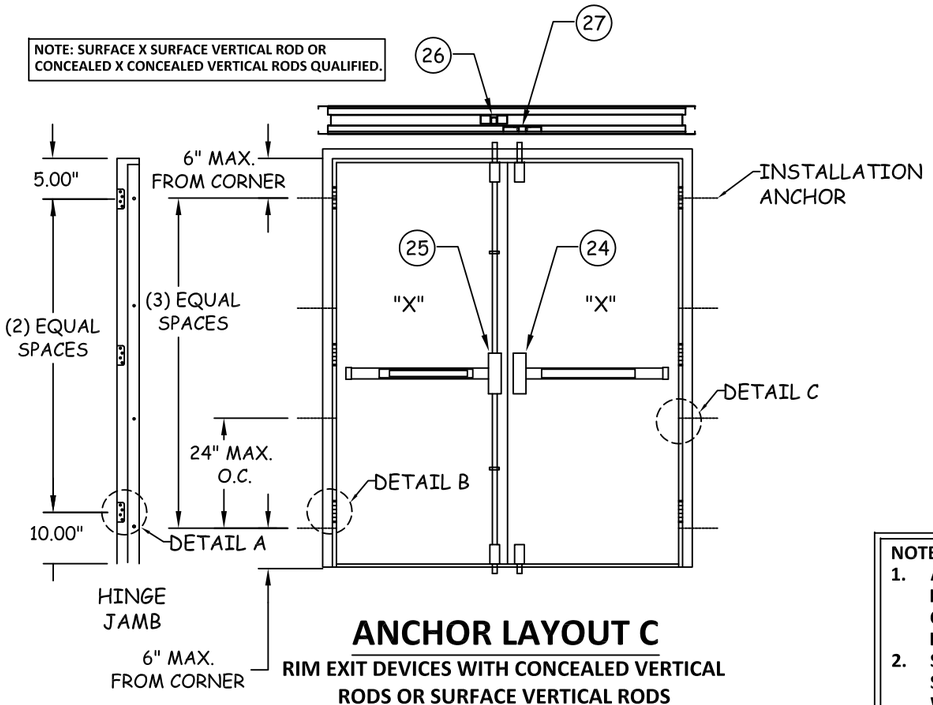

ANCHOR LAYOUT C

RIM EXIT DEVICES WITH CONCEALED VERTICAL RODS OR SURFACE VERTICAL RODS

NOTES:

1. **ALTERNATE QUALIFIED SINGLE DOOR HARDWARE OPTIONS INCLUDE CYLINDRICAL LOCK OR MORTISE LOCKSETS WITH DEADBOLT.**
2. **SINGLE DOOR ANCHOR LAYOUT SHOWN APPLIES TO INSTALLATIONS WITH CYLINDRICAL LOCK AND MORTISE LOCKSETS WITH DEADBOLT.**

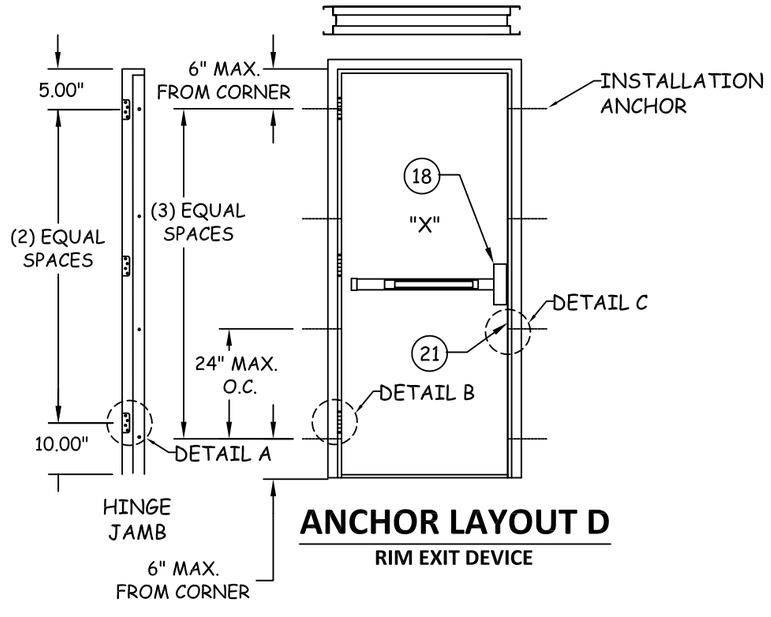

ANCHOR LAYOUT D

RIM EXIT DEVICE

NATIONAL
CUSTOM HOLLOW METAL DOORS & FRAMES

1701 EAST 22ND ST.
LITTLE ROCK, AR 72206

PH: 501-372-3441 FX: 501-375-3070

TITLE:
OS FLUSH STEEL DOOR
ANCHOR LAYOUTS
& NOTES

PREPARED BY:
BUILDING DROPS, INC.
398 E DANIA BEACH BLVD., # 338
DANIA BEACH, FL 33004
PH: (954) 399-8478 FX: (954) 744-4738

REVISIONS

NO.	DESCRIPTION	BY	DATE

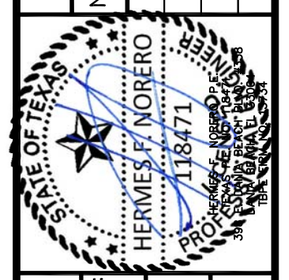

DATE:	DWN BY:	CHK BY:	SCALE:
4.20.11	MSS	HN	NTS

DWG #:
NCHM002

SHEET: 3 OF 8

12/22/2015 4:58 PM
s:\projects\national hollow metal door\dt\15-0929 product evaluation revision\dwgs\nchm002.dwg

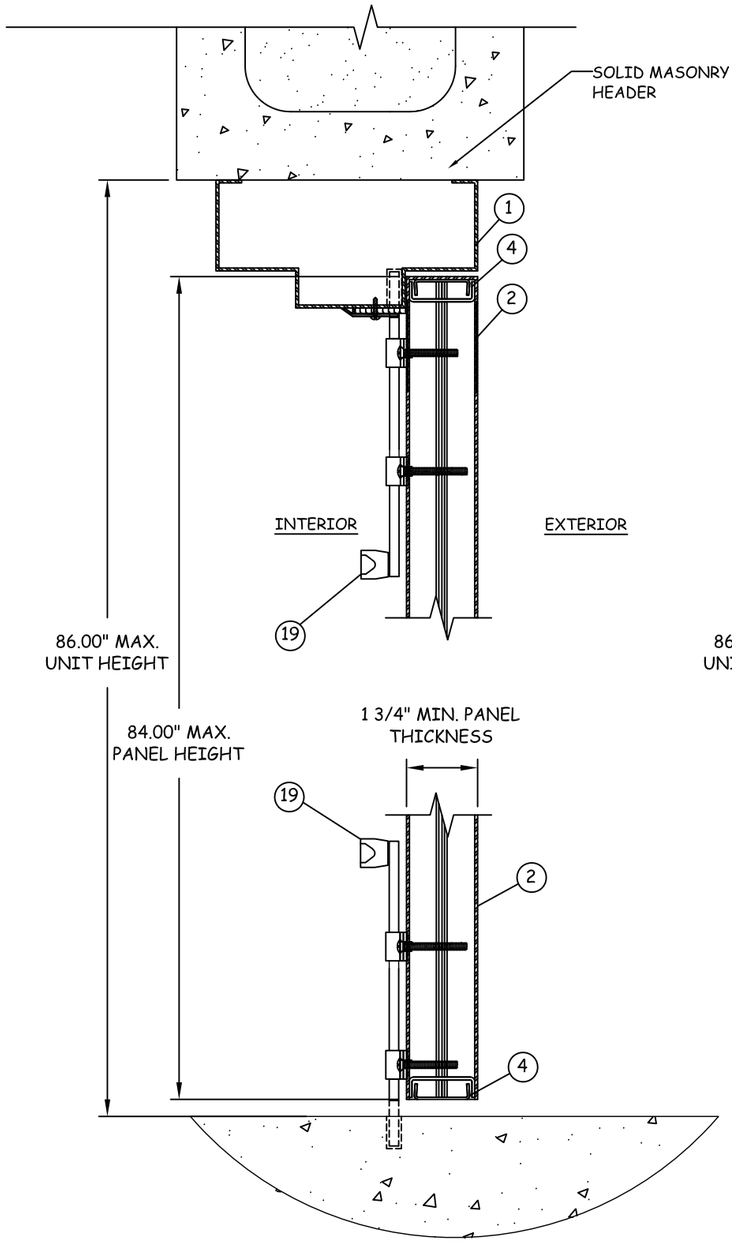

A/4 VERTICAL SECTION

HEAD/SILL - CONCRETE/MASONRY
(MORTISE LOCK/
CYLINDRICAL LOCK WITH SURFACE BOLTS)

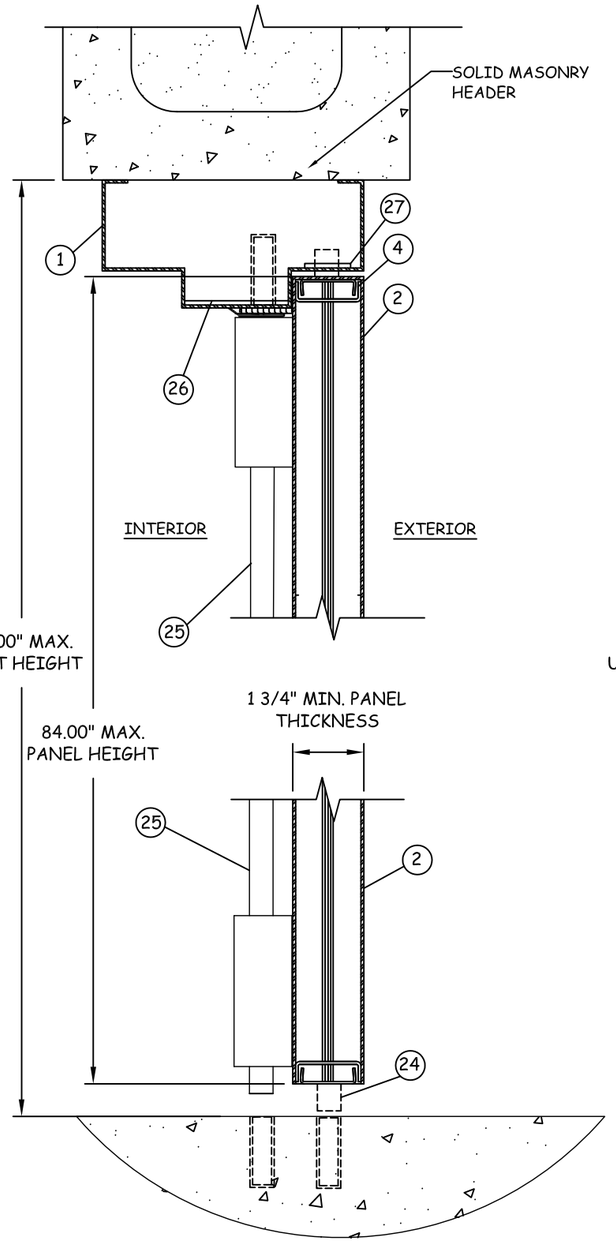

B/4 VERTICAL SECTION

HEAD/SILL - CONCRETE/MASONRY
(SURFACE OR CONCEALED VERTICAL ROD)

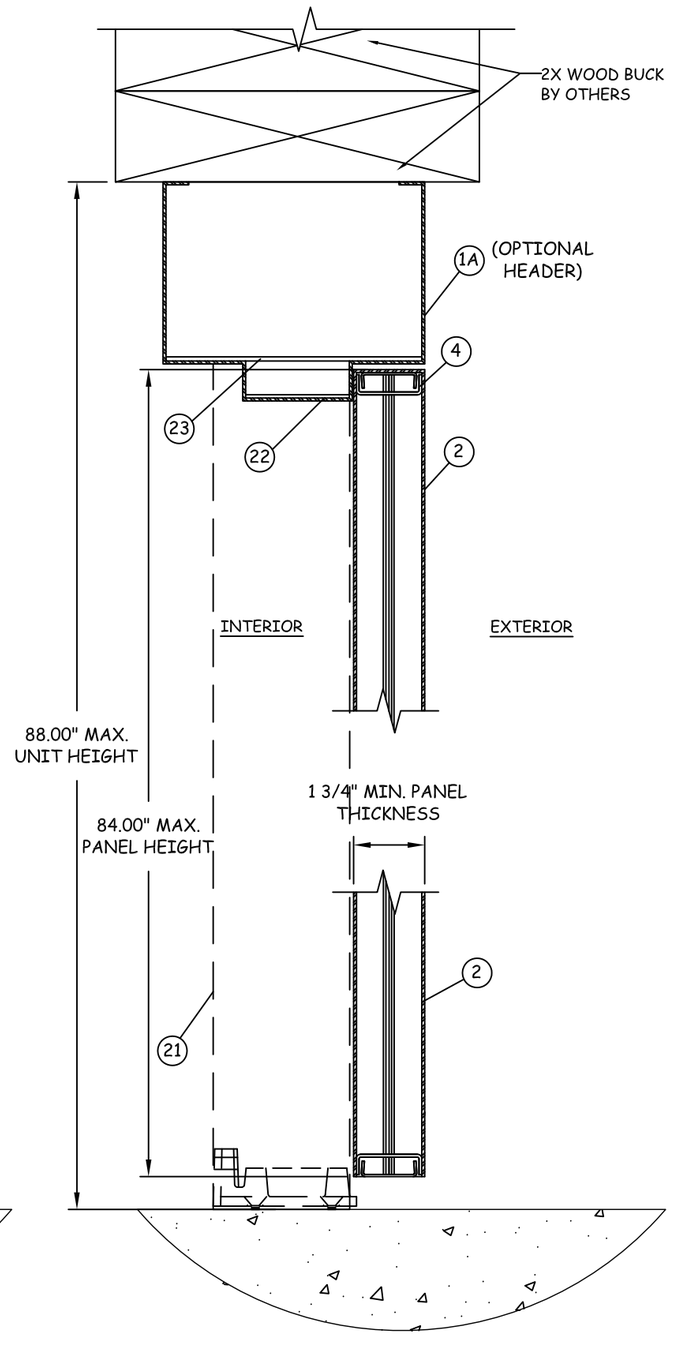

C/4 VERTICAL SECTION

HEAD - 2X WOOD FRAME
SILL - CONCRETE
(REMOVABLE MULLION)

NATIONAL
CUSTOM HOLLOW METAL DOORS & FRAMES
1701 EAST 22ND ST.
LITTLE ROCK, AR 72206
PH: 501-372-3441 FX: 501-375-3070

TITLE:
OS FLUSH STEEL DOOR
VERTICAL SECTIONS

PREPARED BY:
BUILDING DROPS, INC.
398 E DANIA BEACH BLVD., # 338
DANIA BEACH, FL 33004
PH: (954) 399-8478 FX: (954) 744-4738

REVISIONS

NO.	DESCRIPTION	BY	DATE
A	4" HEADER DETAIL ADDED	SM	12.22.15

STATE OF TEXAS
HERMES F. NORERO
118471
PROFESSIONAL ENGINEER

DATE: 4.20.11
DWN BY: MSS
CHK BY: HN
SCALE: NTS

DWG #: NCHM002

SHEET: 4 OF 8

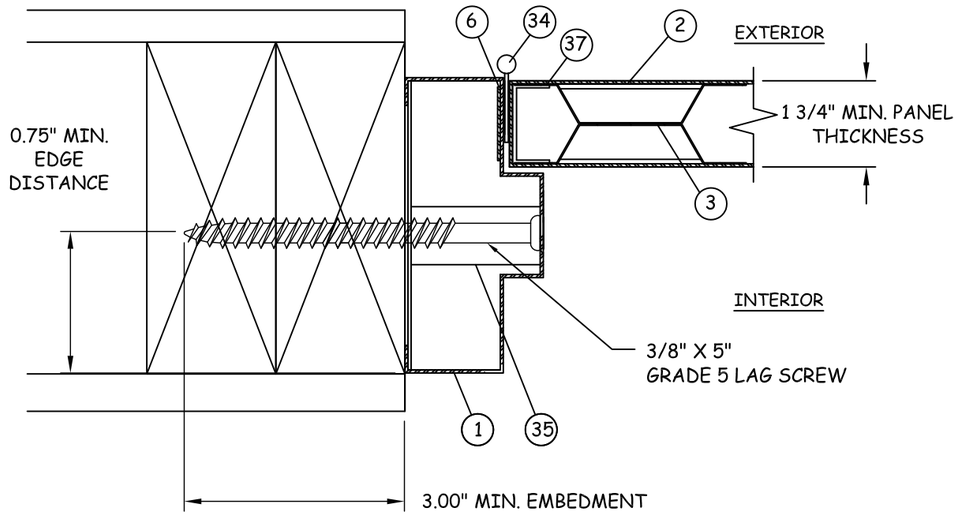

D/5 HORIZONTAL SECTION

JAMB - 2X WOOD BUCK
HINGE JAMB

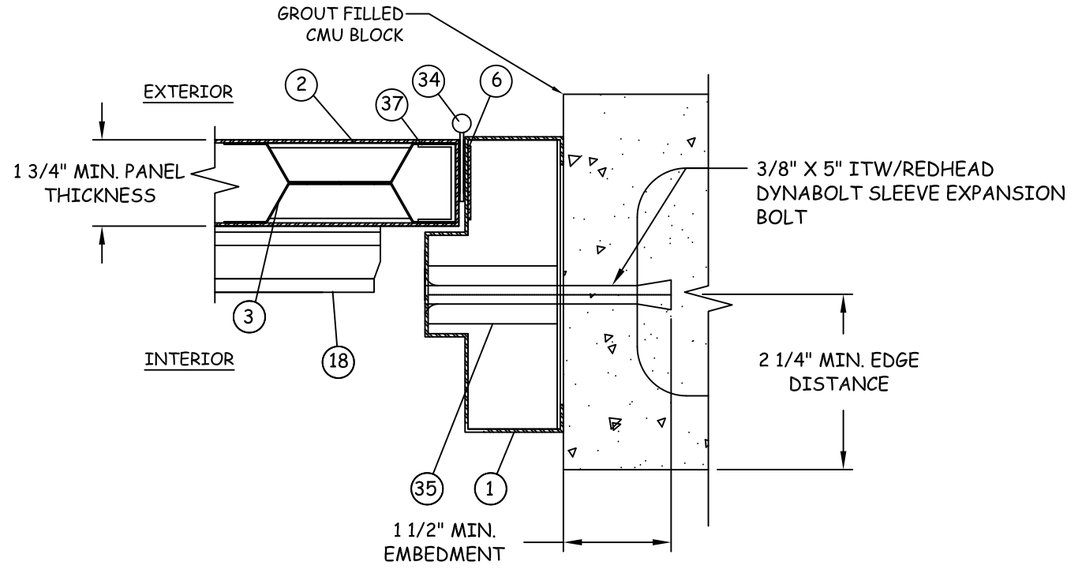

E/5 HORIZONTAL SECTION

JAMB - CONCRETE/GROUT FILLED CMU
HINGE JAMB

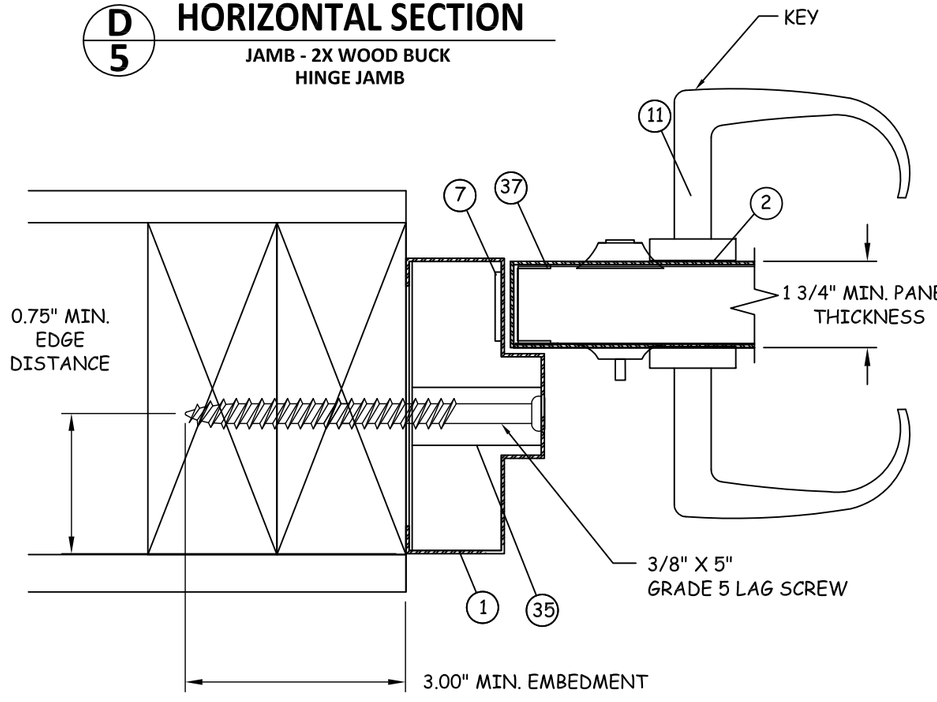

F/5 HORIZONTAL SECTION

LOCK JAMB - 2X WOOD BUCK
MORTISE LOCKSET WITH DEADBOLT

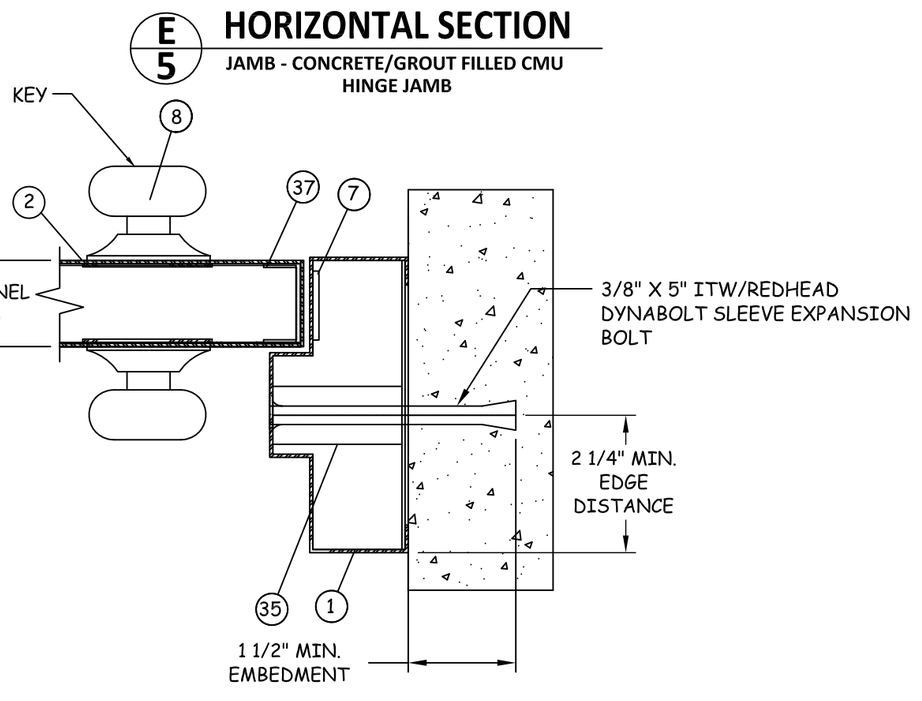

K/5 HORIZONTAL SECTION

LOCK JAMB - CONCRETE
CYLINDRICAL LOCK

NATIONAL
CUSTOM HOLLOW METAL DOORS & FRAMES
1701 EAST 22ND ST.
LITTLE ROCK, AR 72206
PH: 501-372-3441 FX: 501-375-3070

TITLE: OS FLUSH STEEL DOOR
HORIZONTAL SECTIONS

PREPARED BY:
BUILDING DROPS, INC.
398 E DANIA BEACH BLVD., # 338
DANIA BEACH, FL 33004
PH: (954) 399-8478 FX: (954) 744-4738

REVISIONS

NO.	DESCRIPTION	BY	DATE
A	SECTION K/5 ADDED	SM	12.22.15

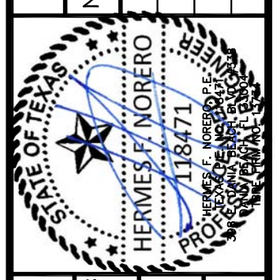

DATE: 4.20.11
DWN BY: MSS
CHK BY: HN
SCALE:

DWG #: NCHM002

SHEET: 5 OF 8

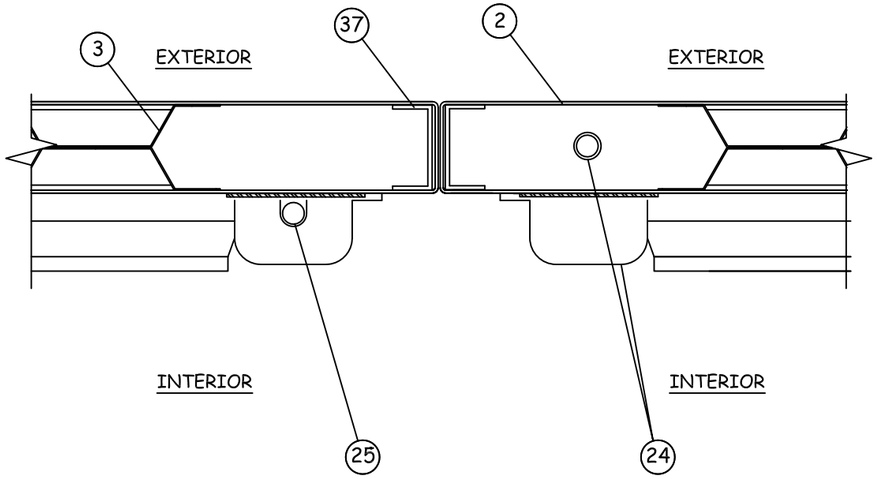

G/6 HORIZONTAL SECTION

SURFACE/CONCEALED VERTICAL ROD

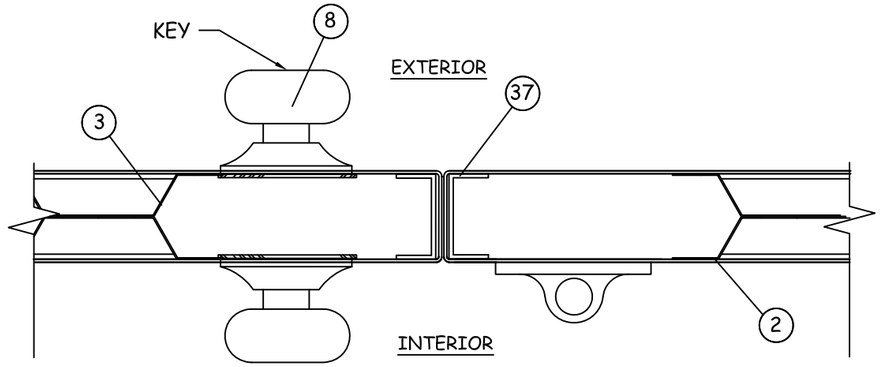

H/6 HORIZONTAL SECTION

CYLINDRICAL LOCK
(SURFACE BOLTS ON INACTIVE)

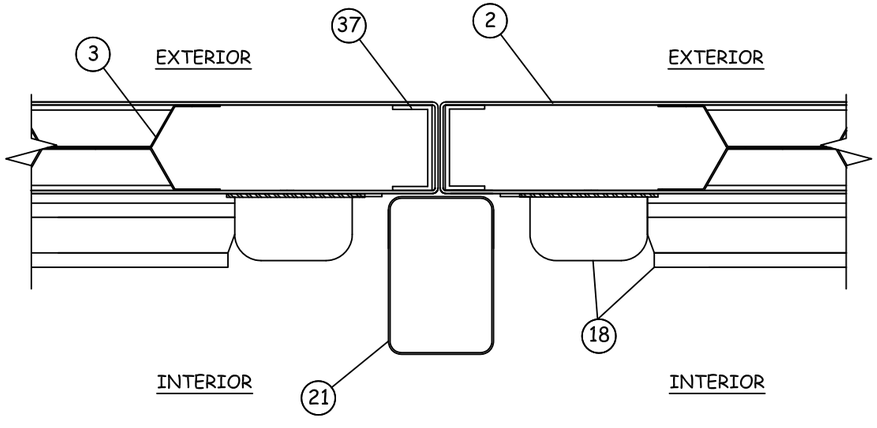

I/6 HORIZONTAL SECTION

REMOVABLE MULLION

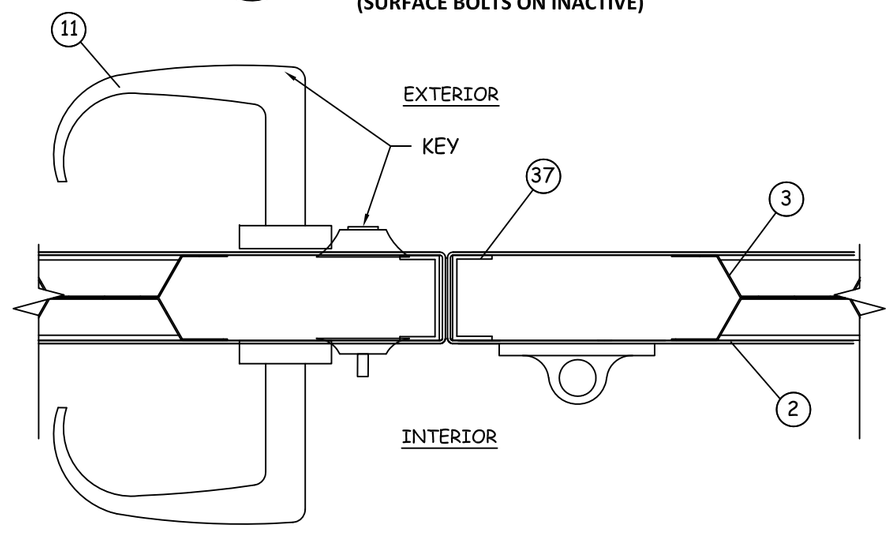

J/6 HORIZONTAL SECTION

MORTISE LOCKSET WITH DEADBOLT
(SURFACE BOLTS ON INACTIVE)

NATIONAL
CUSTOM HOLLOW METAL DOORS & FRAMES
1701 EAST 22ND ST.
LITTLE ROCK, AR 72206
PH: 501-372-3441 FX: 501-375-3070

TITLE:
OS FLUSH STEEL DOOR
HORIZONTAL SECTIONS

PREPARED BY:
BUILDING DROPS, INC.
398 E DANIA BEACH BLVD., # 338
DANIA BEACH, FL 33004
PH: (954) 399-8478 FX: (954) 744-4738

REVISIONS

NO.	DESCRIPTION	BY	DATE
A	INTERIOR KNOB ADDED TO H/6	SM	12.22.15

STATE OF TEXAS
HERMES F. NORERO
118471
PROFESSIONAL ENGINEER

DATE: 4.20.11
DWN BY: MSS
CHK BY: HN
SCALE: NTS

DWG #: NCHM002

SHEET: 6 OF 8

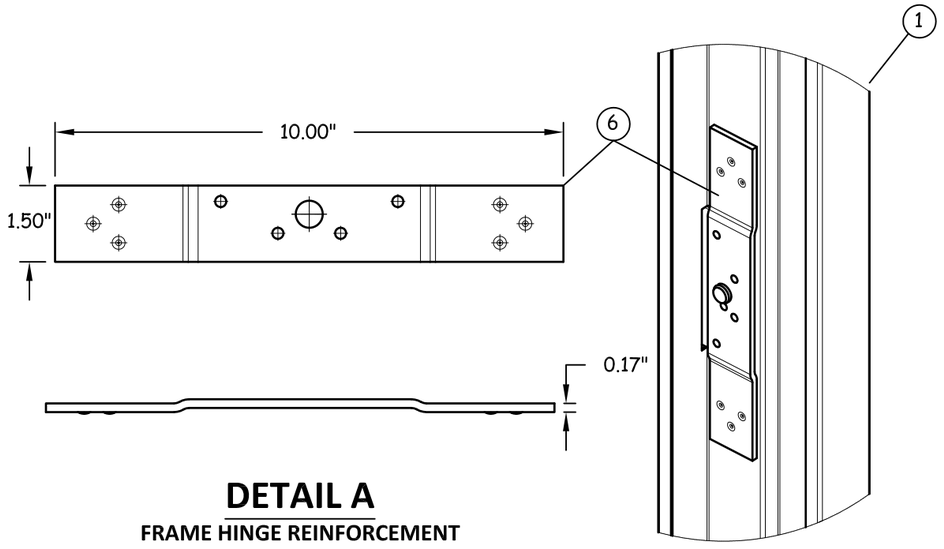

DETAIL A
FRAME HINGE REINFORCEMENT

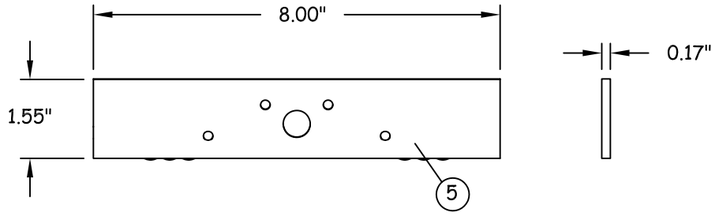

DETAIL B
DOOR HINGE REINFORCEMENT AND HINGE DETAIL

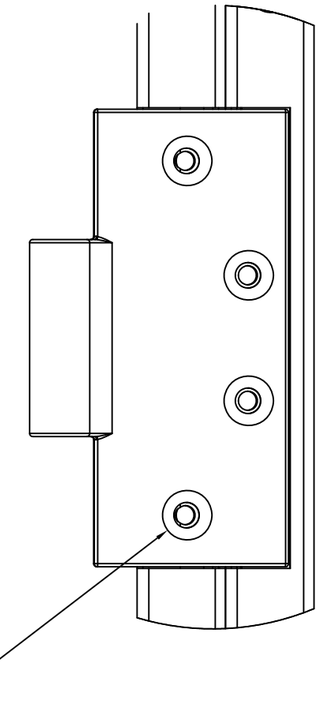

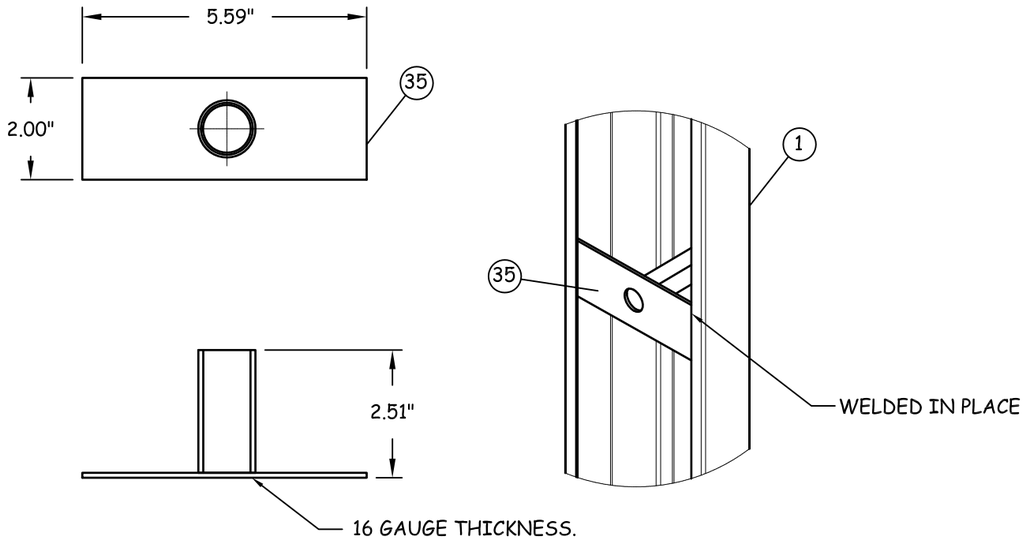

DETAIL C
ANCHOR STRAP

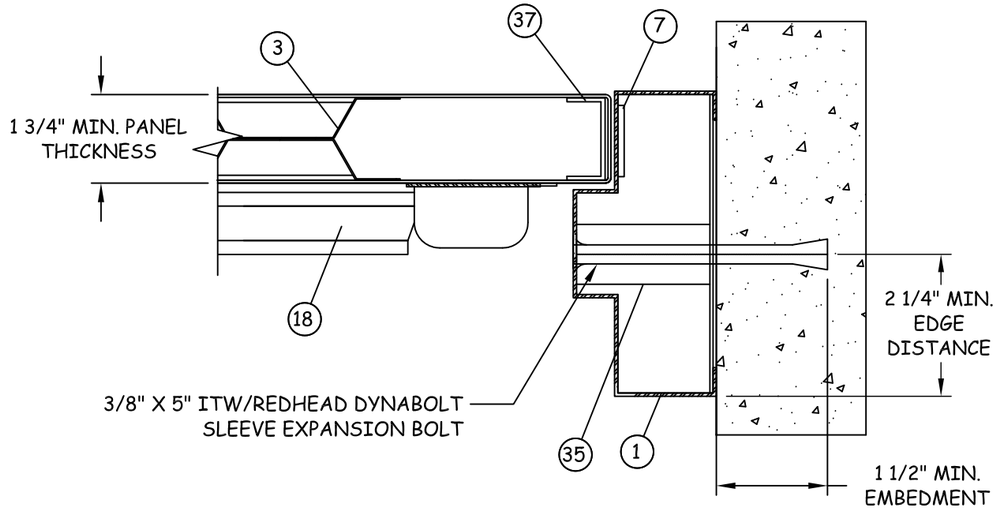

L/7 HORIZONTAL SECTION
LOCK JAMB - CONCRETE RIM EXIT DEVICE

NATIONAL
CUSTOM HOLLOW METAL DOORS & FRAMES

1701 EAST 22ND ST.
LITTLE ROCK, AR 72206

PH: 501-372-3441 FX: 501-375-3070

TITLE:
OS FLUSH STEEL DOOR
STIFFENER DETAILS
& HORIZONTAL SECTION

PREPARED BY:
BUILDING DROPS, INC.
398 E DANIA BEACH BLVD., # 338
DANIA BEACH, FL 33004
PH: (954) 399-8478 FX: (954) 744-4738

REVISIONS

NO.	DESCRIPTION	BY	DATE
A	DETAIL L/7 ADDED	SM	12.22.15

STATE OF TEXAS
HERMES F. NORERO
118471
LICENSED
PROFESSIONAL
ENGINEER
"HERMES F. NORERO P.E." TEXAS LICENSE NO. 118471 IS EMPLOYED BY BUILDING DROPS, INC. 398 E DANIA BEACH BLVD., # 338 DANIA BEACH, FL 33004

DATE: 4.20.11
DWN BY: MSS
CHK BY: HN
SCALE: NTS

DWG #:
NCHM002

SHEET: 7 OF 8

BILL OF MATERIAL			
NO.	DESCRIPTION	MATERIAL	MANUFACTURER
1	FRAME - 5-3/4" DEPTH	16 GA./14 GA. A60 GALV. STEEL	NCHM
1A	OPTIONAL HEADER FRAME - 5-3/4" DEPTH	16 GA./14 GA. A60 GALV. STEEL	NCHM
2	DOOR LEAF	16 GA. A60 GALV. STEEL SHEETS	NCHM
3	DOOR HAT CHANNEL STIFFENERS	22 GA. STEEL	NCHM
4	TOP AND BOTTOM DOOR CHANNELS	16 GA. STEEL	NCHM
5	DOOR HINGE REINFORCEMENTS	7 GA. STEEL	DAYTON IND.
6	FRAME HINGE REINFORCEMENT	3/16" X 10" - 7 GA. STEEL	DAYTON IND.
7	FRAME STRIKE REINFORCEMENT TAB - SINGLE UNITS	7 GA. STEEL	NCHM
8	CL3300 SERIES CYLINDRICAL LOCK	-	CORBIN RUSSWIN
9	CYLINDRICAL LOCK TAB-DOOR	10 GA. STEEL	NCHM
10	CYLINDRICAL LOCK REINFORCEMENT-DOOR	18 GA. STEEL	NCHM
11	8200 SERIES MORTISE LOCK WITH DEADBOLT	-	SARGENT
12	MORTISED LOCK TAB	10 GA. STEEL	NCHM
13	MORTISED LOCK REINFORCEMENT	14 GA. STEEL	NCHM
14	FRAME EXIT DEVICE REINFORCEMENT - SINGLE UNITS	12 GA. STEEL	NCHM
15	HINGE EDGE EXIT DEVICE REINFORCEMENT	14 GA. STEEL	NCHM
16	LATCH EDGE EXIT DEVICE REINFORCEMENT	14 GA. STEEL	NCHM
17	IN-ACTIVE DOOR STRIKE TAB	10 GA. STEEL	NCHM
18	7150 SERIES RIM EXIT DEVICE W/ INTERLOCKING STRIKE	-	YALE
19	988Y SURFACE BOLTS	-	YALE
20	SURFACE BOLT REINFORCEMENT - FRAME	12 GA. STEEL	NCHM
21	M200FWS REMOVABLE MULLION	2" X 3" STEEL TUBE	YALE
22	HEADER STOP REINFORCEMENT	12 GA. STEEL	NCHM
23	FULL WIDTH HEADER REINFORCEMENT	12 GA. STEEL	NCHM
24	8600 CVR EXIT DEVICE - ACTIVE LEAF	-	SARGENT
25	HC8700 SVR EXIT DEVICE - INACTIVE LEAF	-	SARGENT
26	SURFACE VERTICAL ROD STRIKE REINFORCEMENT	12 GA. STEEL	NCHM
27	CONCEALED VERTICAL ROD STRIKE TAB	7 GA. STEEL	NCHM
28	INTERIOR FACE SHEET EXIT DEVICE REINFORCEMENT	14 GA. STEEL	NCHM
29	INTERIOR FACE CONCEALED VERTICAL ROD EXIT DEVICE REINF.	14 GA. STEEL	NCHM
30	EXTERIOR FACE CONCEALED VERTICAL ROD EXIT DEVICE REINF.	14 GA. STEEL	NCHM
31	SURFACE VERTICAL ROD EXIT DEVICE HINGE EDGE REINF.	14 GA. STEEL	NCHM
32	SURFACE VERTICAL ROD EXIT DEVICE REINFORCEMENT	14 GA. STEEL	NCHM
33	SURFACE VERTICAL ROD CONTINUOUS LATCH EDGE REINF.	14 GA. STEEL	NCHM
34	TA 2714 BUTT HINGE - SECURED WITH (4) #12 METAL SCREWS	-	MCKINNEY
35	ANCHOR STRAPS	16 GA. STEEL	NCHM
36	DOOR FLUSHING CHANNEL (OPTIONAL)	18 GA. STEEL	NCHM
37	VERTICAL CHANNEL	14 GA. STEEL	NCHM

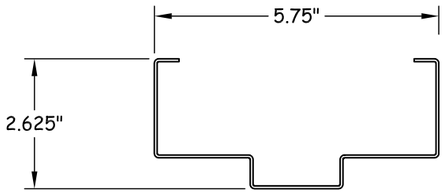

1 FRAME
16 GA./14 GA. A60 GALVANIZED STEEL

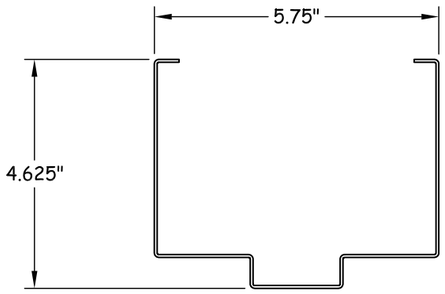

1A OPTIONAL HEADER FRAME
16 GA./14 GA. A60 GALVANIZED STEEL

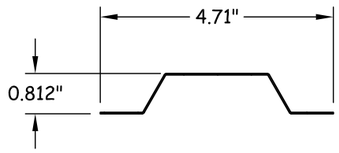

3 DOOR HAT CHANNEL STIFFENERS
22 GA. STEEL

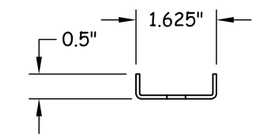

4 TOP & BOTTOM DOOR CHANNELS
16 GA. STEEL

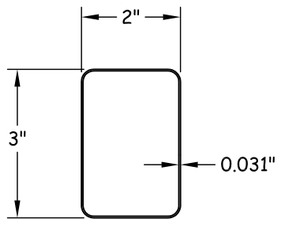

21 M200FWS REMOVABLE MULLION
STEEL TUBE

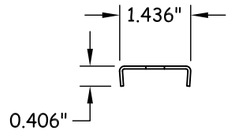

36 DOOR FLUSHING CHANNEL (OPTIONAL)
18 GA. STEEL

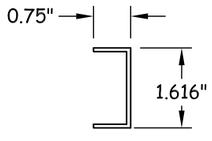

37 VERTICAL CHANNEL
14 GA. STEEL

NATIONAL
CUSTOM HOLLOW METAL DOORS & FRAMES
1701 EAST 22ND ST.
LITTLE ROCK, AR 72206
PH: 501-372-3441 FX: 501-375-3070

TITLE: OS FLUSH STEEL DOOR COMPONENTS & BILL OF MATERIALS

PREPARED BY:
BUILDING DROPS, INC.
398 E DANIA BEACH BLVD., # 338
DANIA BEACH, FL 33004
PH: (954) 399-8478 FX: (954) 744-4738

REVISIONS

NO.	DESCRIPTION	BY	DATE

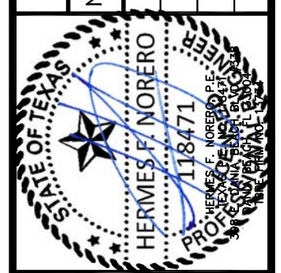

DATE: 4.20.11
DWN BY: MSS
CHK BY: HN
SCALE: NTS

DWG #: NCHM002

SHEET: 8 OF 8