CAL-ROYAL PRODUCTS, INC
6605 Flotilla Street
City of Commerce
CA 90040

DKS SERIES 1800
STEEL COMMERCIAL DOOR
OUTSWING
"IMPACT"

STATE OF TEXAS
LYNDON F. SCHMIDT
104123
LICENSED PROFESSIONAL ENGINEER
10-1-14

Documents Prepared By: Lyndon F. Schmidt, P.E.
TEXAS P.E. #104123
RW BUILDING CONSULTANTS, INC.
P.O. Box 230 Valrico FL. 33595
Phone No.: 813.659.9197
TEXAS BOARD OF PROFESSIONAL ENGINEERS
CERTIFICATE OF REGISTRATION # F-11852

EVALUATED FOR USE IN THE STATE OF TEXAS

The Cal-Royal Door described herein complies with the 2006 International Residential Code (IRC), Sections R301 and the 2006 International Building Code (IBC), Sections 1405.12, 1609 & 1714.5 (including Texas revisions) subject to the following conditions:

1. Anchors shall be as listed and spaced as shown in the details. Anchor embedment to base material shall be beyond wall dressing or stucco.
2. This system has been tested and evaluated as a large missile impact protective system for installation in the Seaward, Inland I and Inland II areas. This product meets missile level "D" and includes Wind Zone 4 as defined in ASTM E1996.
3. Allowable design pressure requirements must be equal to or less than the design pressure rating shown in the design pressure chart, sheet 1 of this drawing.
4. Conditions not covered by this drawing are subject to further engineering analysis.

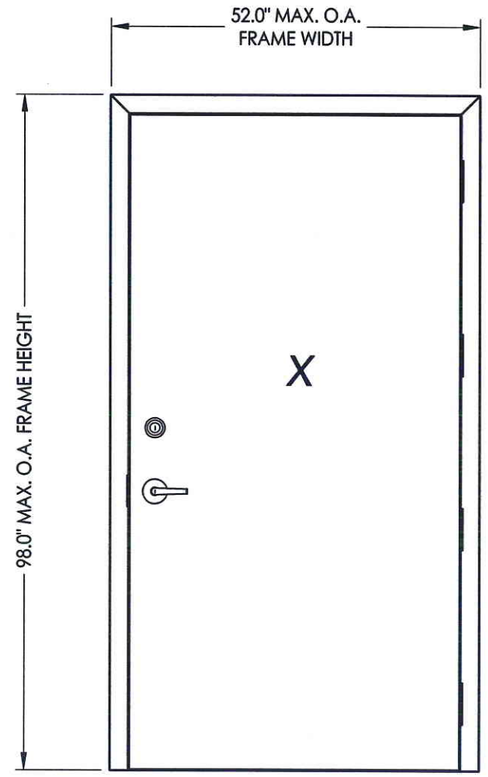

161 Latch & Deadbolt
"Pioneer SL/CSL Series" Latch
"T300 Series" Deadbolt

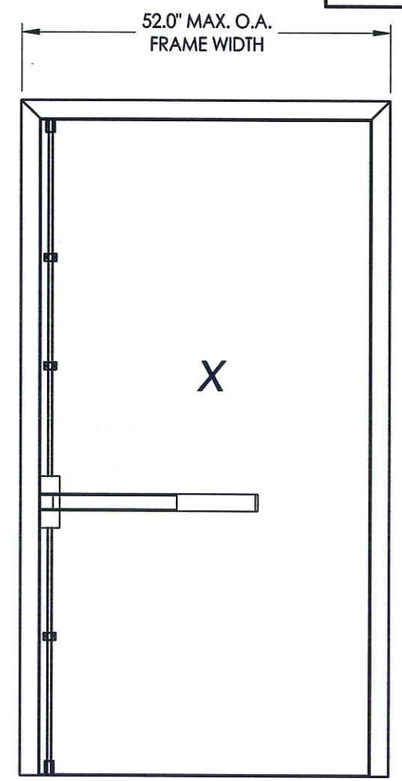

Panic Bar Exit Device
w/ Vertical Rods
"7700-V Series"

OVERALL FRAME DIMENSION	LOCK TYPE	DESIGN PRESSURE (PSF) OUTSWING	
		POSITIVE	NEGATIVE
52.0" x 98.0"	161 LATCH & DEADBOLT "PIONEER SL/CSL & T300 Series"	+80.0	-80.0
40.0" x 98.0"	PANIC BAR EXIT DEVICE w/ VERTICAL RODS "7700-V Series"	+70.0	-70.0
52.0" x 98.0"	PANIC BAR EXIT DEVICE w/ VERTICAL RODS "7700-V Series"	+50.0	-50.0

TABLE OF CONTENTS

SHEET#	DESCRIPTION
1	Typical elevation, design pressures & general notes
2	Door panel details
3	Horizontal and vertical cross sections
4	Frame anchoring
5	Frame anchoring
6	Components
7	Bill of materials and components

PRODUCT: CAL-ROYAL STEEL COMMERCIAL DOOR

PART OR ASSEMBLY: TYPICAL ELEVATION, DESIGN PRESSURES & GENERAL NOTES

NO.	DATE	BY

REVISIONS

DATE: 10/1/14
SCALE: N.T.S.
DWG. BY: JK
CHK. BY: LFS
DRAWING NO.: TX-4483
SHEET 1 OF 7

© 2014 R.W. BUILDING CONSULTANTS INC.

\\2012ess\RWBC\Clients\Cal-Royal NEW\Texas Dept of Ins\TDI - 472 Renewal\Drawings\Current\TEXAS 2014.dwg, TX-4483

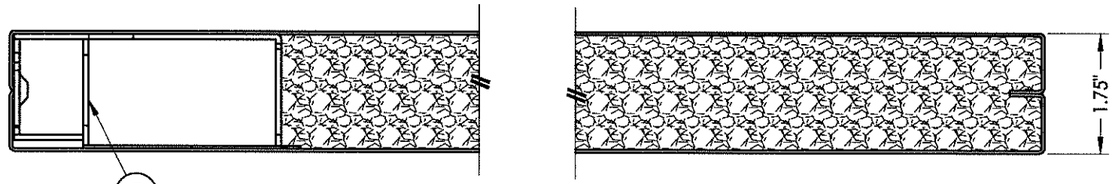

5 161 Lock prep shown

5A Panic Bar prep similar

2/2 HORIZONTAL CROSS SECTION
Door panel

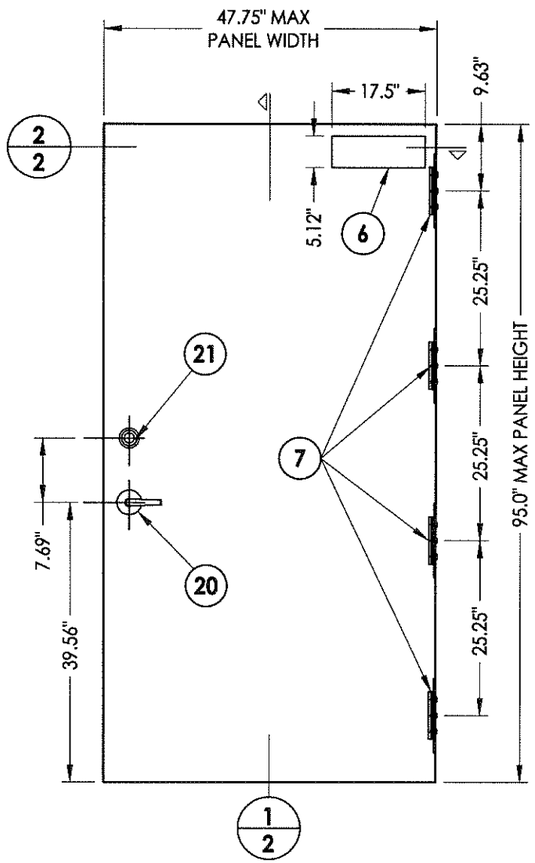

1 CAL-ROYAL STEEL DOOR PANEL

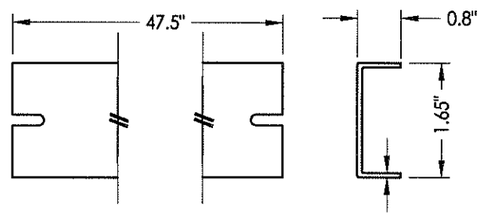

4 FLUSH TOP CHANNEL
Steel

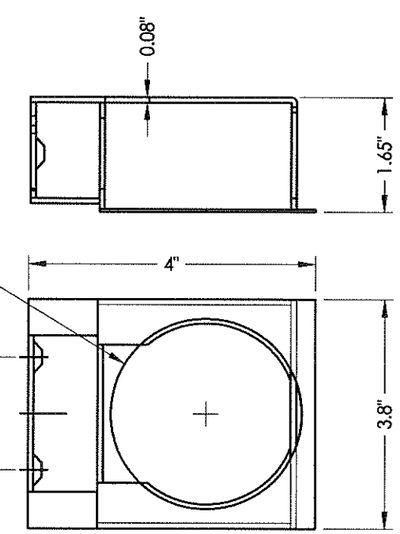

5 STEEL LOCK BOX REINFORCEMENT
161 Lock Prep

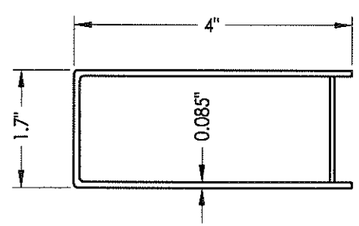

5A STEEL LOCK BOX REINFORCEMENT
Panic Bar Prep

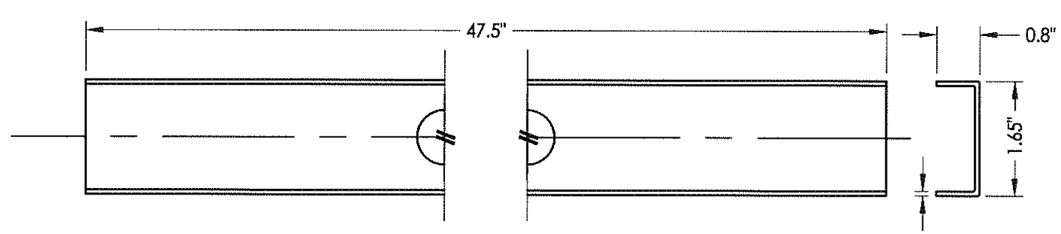

3 BOTTOM CHANNEL
Steel

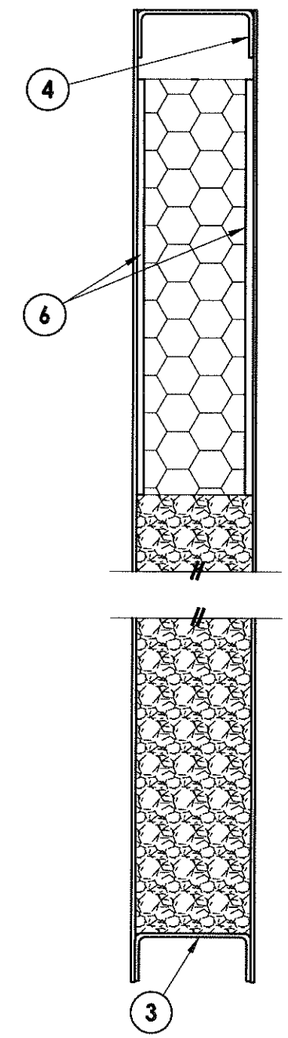

1/2 VERTICAL CROSS SECTION
Door panel

STEEL DOOR SKIN (18 GA.): MIN. 0.045" THK.
STEEL GRADE: ASTM A1008 GALV. STEEL (Fy = 33,000 PSI MIN.)
CORE MATERIAL: EPS FOAM (POLYSTYRENE - 1.0 PCF MIN. DENSITY)

STATE OF TEXAS
LYNDON F. SCHMIDT
104123
LICENSED PROFESSIONAL ENGINEER
10-1-14

Documents Prepared By: Lyndon F. Schmidt, P.E.
TEXAS P.E. #104123
RW BUILDING CONSULTANTS, INC.
P.O. Box 230 Valrico FL 33595
Phone No.: 813.659.9197
TEXAS BOARD OF PROFESSIONAL ENGINEERS
CERTIFICATE OF REGISTRATION # F-11852

PRODUCT: CAL-ROYAL STEEL COMMERCIAL DOOR

PART OR ASSEMBLY: DOOR PANEL DETAILS

NO.	DATE	REVISIONS	BY

DATE: 10/1/14
SCALE: N.T.S.
DWG. BY: JK
CHK. BY: LFS
DRAWING NO.: TX-4483
SHEET 2 OF 7

© 2014 R.W. BUILDING CONSULTANTS INC.

\\2012ess\RWBC\Clients\Cal-Royal NEW\Texas Dept of Ins\TDI - 472 Renewal\Drawings\Current\TEXAS 2014.dwg, 1-2

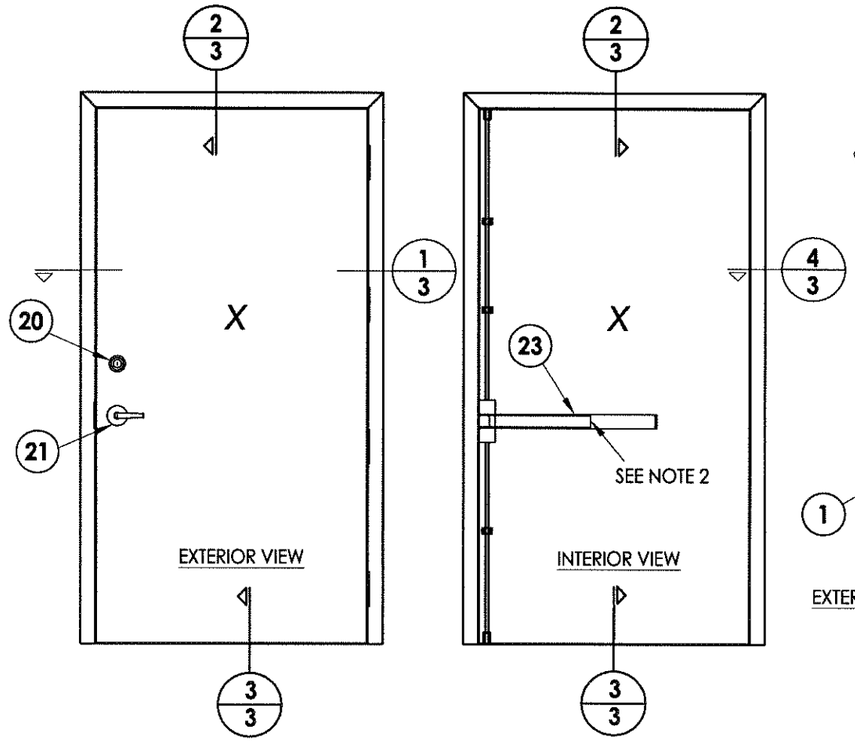

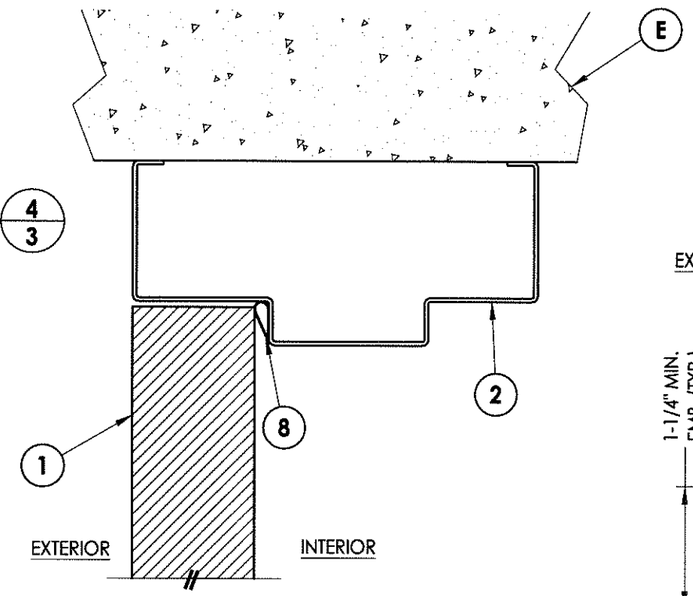

2/3 VERTICAL CROSS SECTION
Outswing configuration

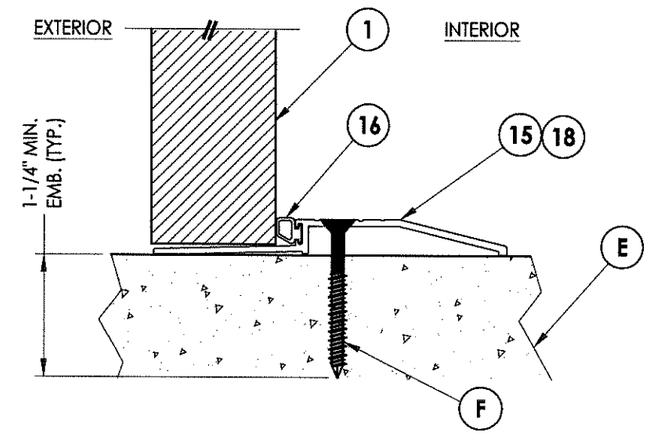

3/3 VERTICAL CROSS SECTION
Outswing configuration

NOTES:
1. Anchor strap (3/4" wide, 18 gauge steel) or Tube Anchor tack welded to frame along each end.
2. Panic Bar set screws (#12-24 x 5/16") must be activated to achieve impact rating. Locate one screw at top and bottom at center of push rail or locate one screw at each end of bar.

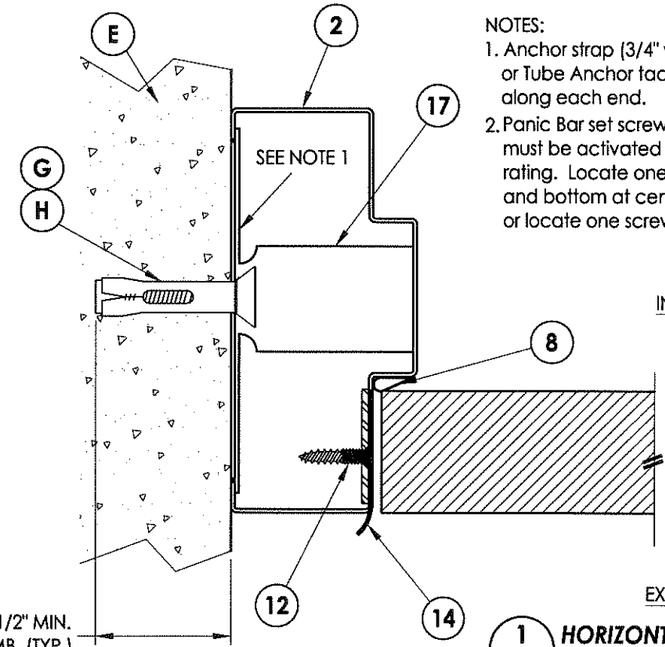

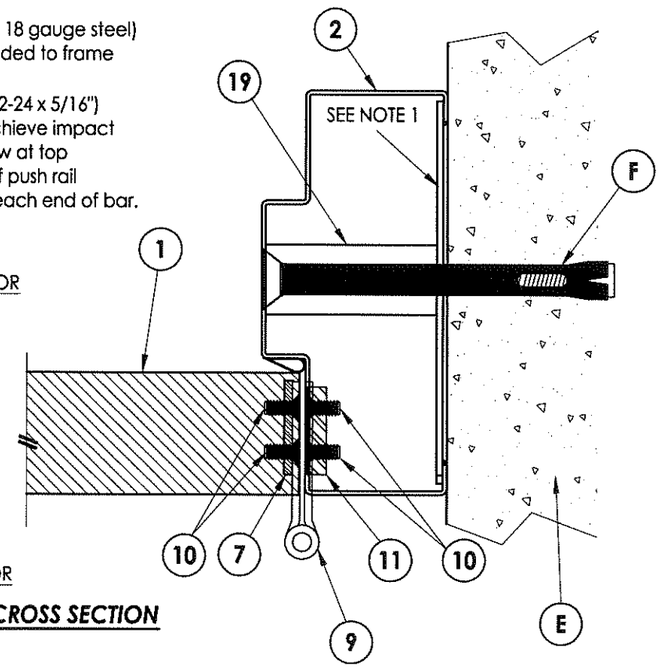

1/3 HORIZONTAL CROSS SECTION

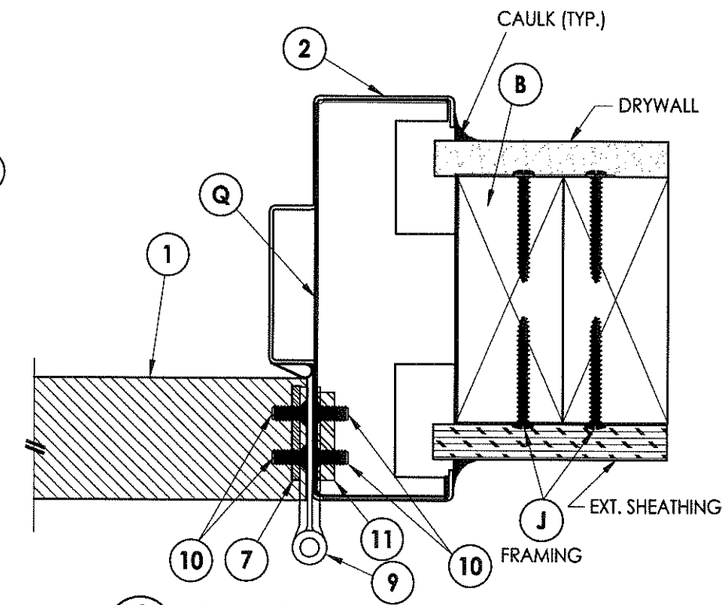

4/3 HORIZONTAL CROSS SECTION
2X Stud Construction
Wood Stud Anchor

STATE OF TEXAS
LYNDON F. SCHMIDT
104123
PROFESSIONAL ENGINEER
10-1-14

Documents Prepared By: Lyndon F. Schmidt, P.E.
TEXAS P.E. #104123
RW BUILDING CONSULTANTS, INC.
P.O. Box 230 Valrico FL. 33595
Phone No.: 813.659.9197
TEXAS BOARD OF PROFESSIONAL ENGINEERS
CERTIFICATE OF REGISTRATION # F-11852

PRODUCT: CAL-ROYAL STEEL COMMERCIAL DOOR

PART OR ASSEMBLY: HORIZONTAL AND VERTICAL CROSS SECTIONS

NO.	DATE	REVISIONS	BY

DATE: 10/1/14
SCALE: N.T.S.
DWG. BY: JK
CHK. BY: LFS
DRAWING NO.: TX-4483
SHEET 3 OF 7

© 2014 R.W. BUILDING CONSULTANTS INC.

\\2012ess\RWBC\Clients\Cal-Royal NEW\Texas Dept of Ins\TDI - 472 Renewal\Drawings\Current\TEXAS 2014.dwg, 1-3

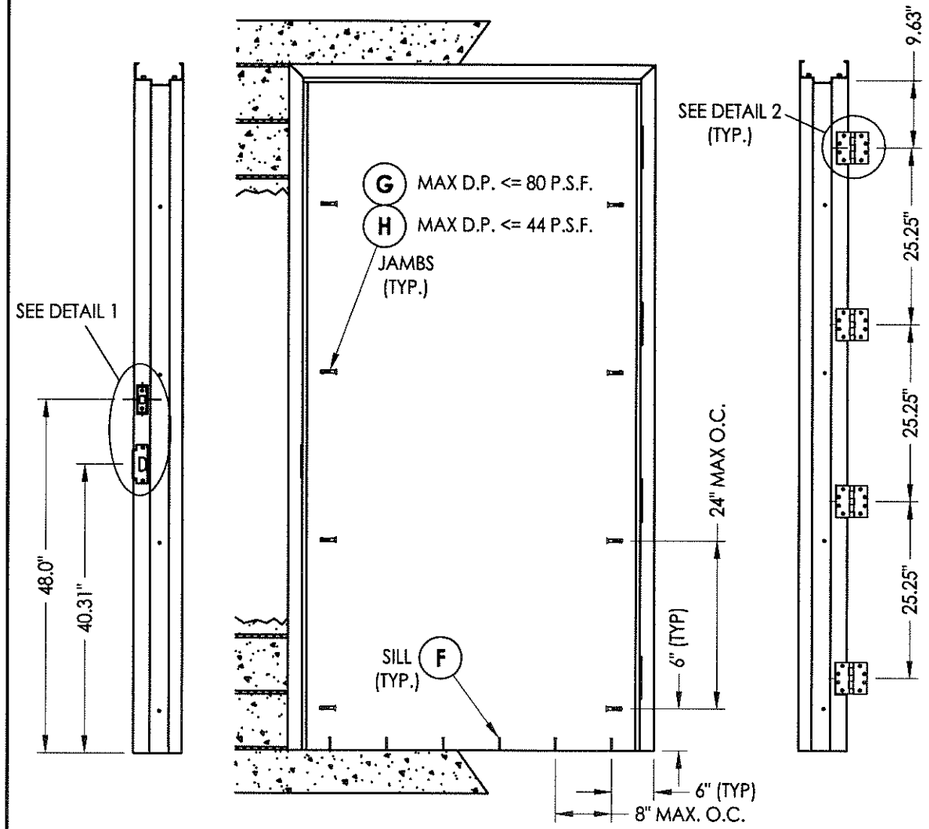

STRIKE JAM **FRAME ANCHORING** **HINGE JAM**

Latch & Deadbolt
Masonry Construction

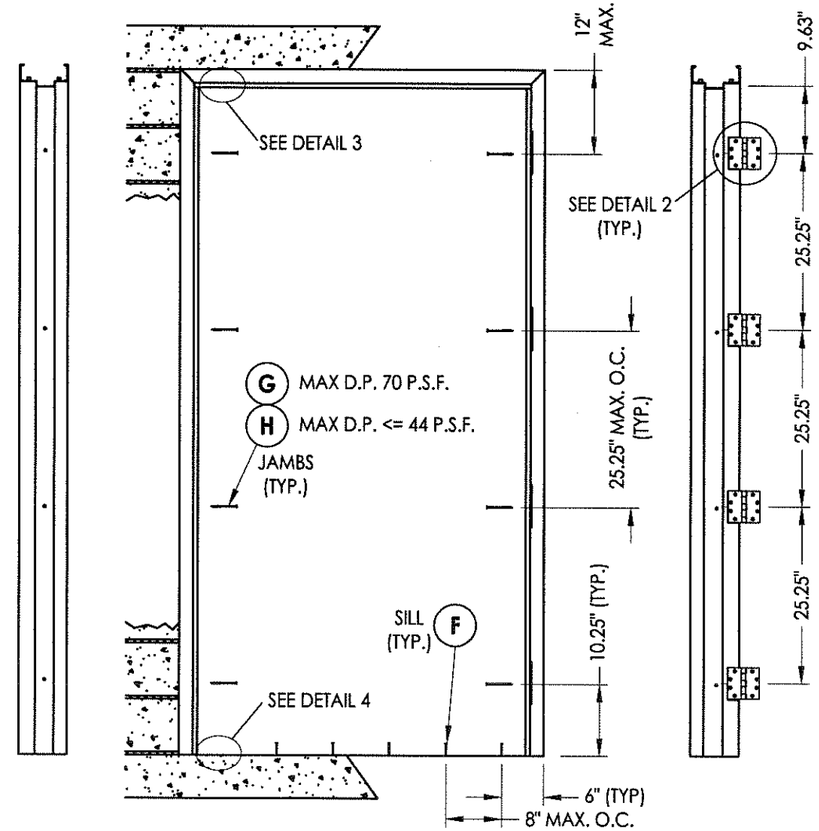

STRIKE JAM **FRAME ANCHORING** **HINGE JAM**

Panic Bar Exit Device w/ Vertical Rods
Masonry Construction

CONCRETE ANCHOR NOTES:

1. *Substitution of equal concrete screws from a different supplier may have different edge distance and center distance requirements.*
2. *Concrete screw locations at the corners may be adjusted to maintain the minimum edge distance to mortar joints. If concrete screw locations noted as "MAX. ON CENTER" must be adjusted to maintain the minimum edge distance to mortar joints, additional concrete screws may be required to ensure the maximum on center dimension is not exceeded.*
3. *Concrete anchor table:*

ANCHOR TYPE	ANCHOR SIZE	MIN. EMBEDMENT	MIN. CLEARANCE TO MASONRY EDGE	MIN. CLEARANCE TO ADJACENT ANCHOR
ITW TAPCON®	1/4"	1-1/4"	4"	2"
TAPPER	3/8"	1-1/2"	4-1/4"	3-3/4"
DYNABOLT SLEEVE ANCHOR	3/8"	1-1/2"	2-1/4"	4-1/2"

4. *Embedment may be through 1-1/4" face shell of hollow block.*

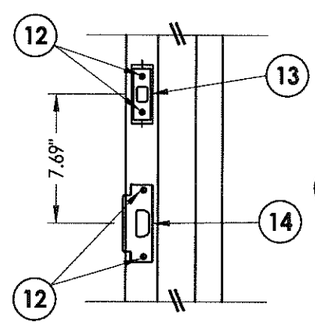

DETAIL 1
Latch & Deadbolt Strike Plates

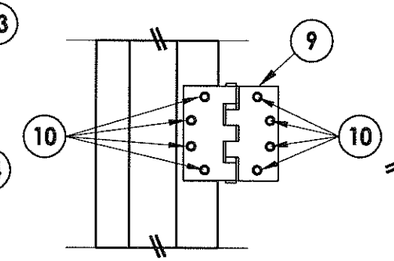

DETAIL 2
Hinges

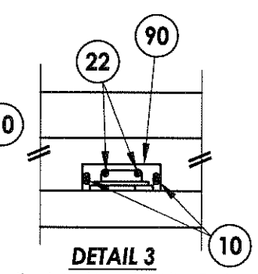

DETAIL 3
Vertical Rod Latch Strike Plate
@ head

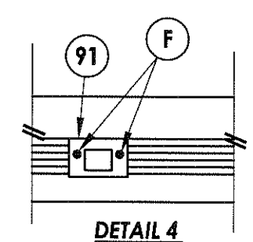

DETAIL 4
Vertical Rod Latch Strike Plate
@ sill

STATE OF TEXAS
LYNDON F. SCHMIDT
104123
LICENSED
PROFESSIONAL ENGINEER
10-1-14

Documents Prepared By: Lyndon F. Schmidt, P.E.
TEXAS P.E. #104123
RW BUILDING CONSULTANTS, INC.
P.O. Box 230 Valrico FL 33595
Phone No.: 813.659.9197
TEXAS BOARD OF PROFESSIONAL ENGINEERS
CERTIFICATE OF REGISTRATION # F-11852

PRODUCT: CAL-ROYAL STEEL COMMERCIAL DOOR

PART OR ASSEMBLY: FRAME ANCHORING

NO.	DATE	REVISIONS	BY

DATE: 10/1/14
SCALE: N.T.S.
DWG. BY: JK
CHK. BY: LFS
DRAWING NO.: TX-4483
SHEET 4 OF 7

© 2014 R.W. BUILDING CONSULTANTS INC.

\\2012ess\RWBC\Clients\Cal-Royal NEW\Texas Dept of Ins\TDI - 472 Renewal\Drawings\Current\TEXAS 2014.dwg, 1-4

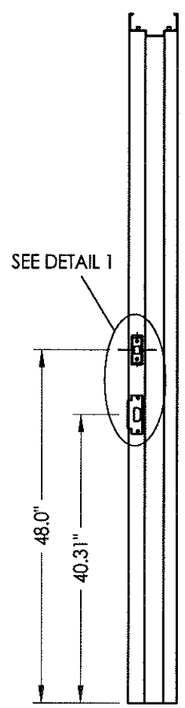

STRIKE JAM

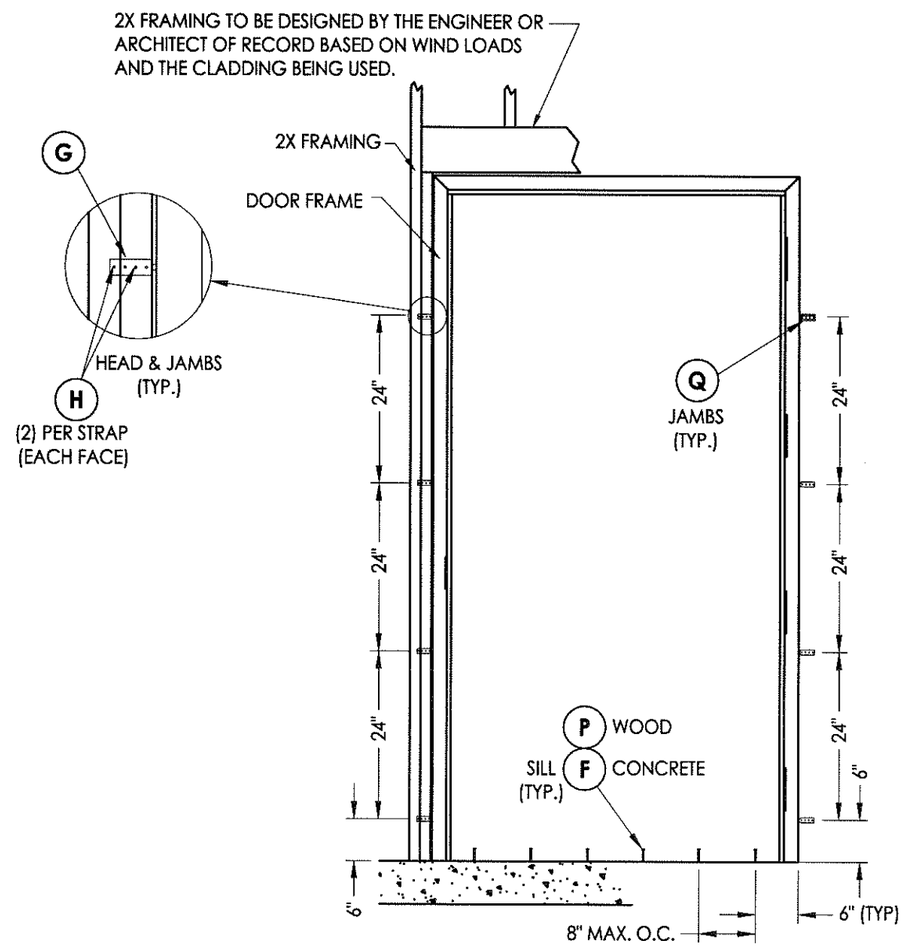

FRAME ANCHORING
Latch & Deadbolt
2X Stud Construction
Strap Anchors

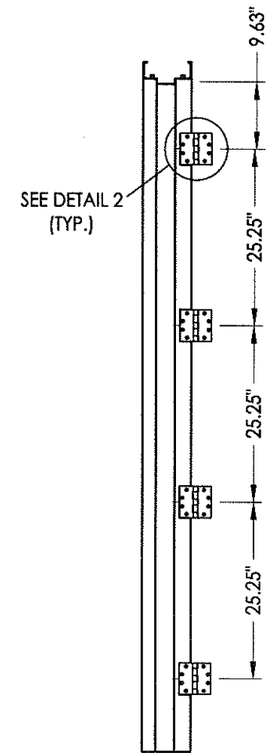

HINGE JAM

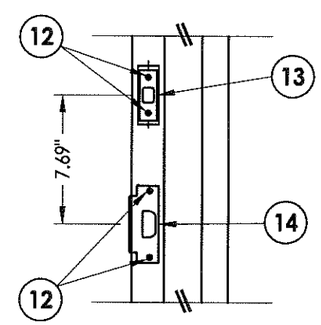

DETAIL 1
Latch & Deadbolt Strike Plates

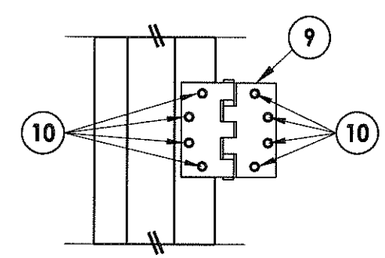

DETAIL 2
Hinges

CONCRETE ANCHOR NOTES:

1. *Substitution of equal concrete screws from a different supplier may have different edge distance and center distance requirements.*
2. *Concrete screw locations at the corners may be adjusted to maintain the minimum edge distance to mortar joints. If concrete screw locations noted as "MAX. ON CENTER" must be adjusted to maintain the minimum edge distance to mortar joints, additional concrete screws may be required to ensure the maximum on center dimension is not exceeded.*
3. *Concrete anchor table:*

ANCHOR TYPE	ANCHOR SIZE	MIN. EMBEDMENT	MIN. CLEARANCE TO MASONRY EDGE	MIN. CLEARANCE TO ADJACENT ANCHOR
ITW TAPCON®	1/4"	1-1/4"	4"	2"

4. *Embedment may be through 1-1/4" face shell of hollow block.*

STATE OF TEXAS
LYNDON F. SCHMIDT
104123
LICENSED PROFESSIONAL ENGINEER
10-1-14

Documents Prepared By: Lyndon F. Schmidt, P.E.
TEXAS P.E. #104123
RW BUILDING CONSULTANTS, INC.
P.O. Box 230 Valrico FL. 33595
Phone No.: 813.659.9197
TEXAS BOARD OF PROFESSIONAL ENGINEERS
CERTIFICATE OF REGISTRATION # F-11852

PRODUCT: CAL-ROYAL STEEL COMMERCIAL DOOR

PART OR ASSEMBLY: FRAME ANCHORING

NO.	DATE	BY

REVISIONS

DATE: 10/1/14
SCALE: N.T.S.
DWG. BY: JK
CHK. BY: LFS
DRAWING NO.: TX-4483
SHEET 5 OF 7

© 2014 R.W. BUILDING CONSULTANTS INC.

\\2012ess\RWBC\Clients\Cal-Royal NEW\Texas Dept of Ins\TDI - 472 Renewal\Drawings\Current\TEXAS 2014.dwg, 1-5

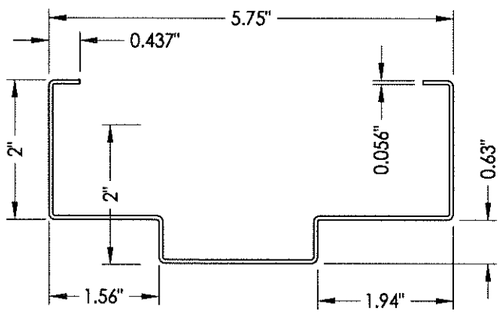

2 FRAME
16 Ga. Steel

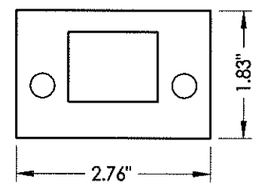

91 VERTICAL ROD LATCH STRIKE PLATE
@ Sill

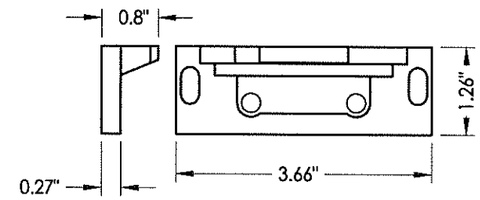

90 VERTICAL ROD LATCH STRIKE PLATE
@ Head

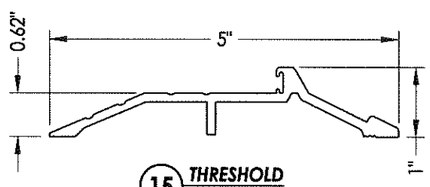

15 THRESHOLD

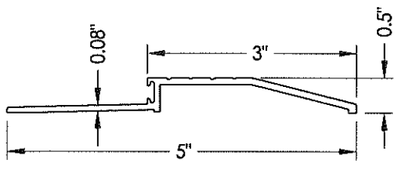

18 THRESHOLD

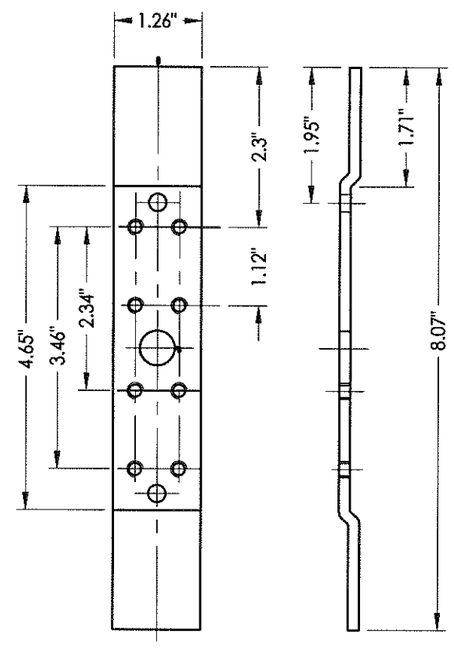

11 FRAME HINGE REINFORCEMENT
8 Ga. Steel

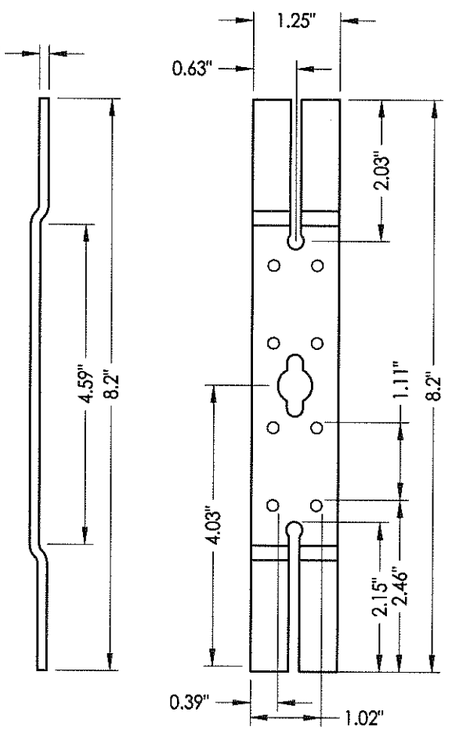

7 DOOR HINGE REINFORCEMENT
8 Ga. Steel

STATE OF TEXAS
LYNDON F. SCHMIDT
104123
LICENSED PROFESSIONAL ENGINEER
10-1-14

Documents Prepared By: Lyndon F. Schmidt, P.E.
TEXAS P.E. #104123

RW BUILDING CONSULTANTS, INC.
P.O. Box 230 Valrico FL, 33595
Phone No.: 813.659.9197

TEXAS BOARD OF PROFESSIONAL ENGINEERS
CERTIFICATE OF REGISTRATION # F-11652

PRODUCT: CAL-ROYAL STEEL COMMERCIAL DOOR

PART OR ASSEMBLY: BILL OF MATERIALS AND COMPONENTS

NO.	DATE	REVISIONS	BY

DATE: 10/1/14
SCALE: N.T.S.
DWG. BY: JK
CHK. BY: LFS
DRAWING NO.: TX-4483
SHEET 6 OF 7

© 2014 R.W. BUILDING CONSULTANTS INC.

\\2012ess\RWBC\Clients\Cal-Royal NEW\Texas Dept of Ins\TDI - 472 Renewal\Drawings\Current\TEXAS 2014.dwg, 1-6

BILL OF MATERIALS

ITEM #	DESCRIPTION	MATERIAL
E	MASONRY - 3,000 PSI MIN. CONCRETE CONFORMING TO ACI 301 OR HOLLOW BLOCK CONFORMING TO ASTM C90	CONCRETE
F	1/4" X 2-1/4" ITW PFH CONCRETE SCREW	STEEL
G	3/8" X 2" PFH ITW DYNABOLT SLEEVE ANCHOR	STEEL
H	3/8" X 2" PFH TAPPER CONCRETE SCREW BY POWERS FASTENERS	STEEL
P	#12 X 2-1/2" PFH WOOD SCREW	STEEL
Q	WOOD STRAP ANCHOR	STEEL
1	DOOR PANEL	STEEL
2	HOLLOW FRAME 2"	STEEL
3	BOTTOM CHANNEL	STEEL
4	FLUSH TOP CHANNEL	STEEL
5	LOCK BOX REINFORCEMENT	STEEL
5A	LOCK BOX REINFORCEMENT	STEEL
6	DOOR CLOSER REINFORCEMENT (11 GA.)	STEEL
7	DOOR HINGE REINFORCEMENT	STEEL
8	WEATHERSTRIP - COMPRESSION BULB 1/4" X 1/2" (PEMKO S88)	NEOPRENE
9	4-1/2" X 4-1/2" X 0.125" TEMPLATE HINGE	STEEL
10	#12-24 X 1/2" PFH MACHINE SCREW	STEEL
11	FRAME HINGE REINFORCEMENT	STEEL
12	#12-24 X 1" COMBINATION MACHINE / WOOD SCREW	STEEL
13	DEAD BOLT STRIKE	STEEL
14	ANSI LATCH STRIKE	STEEL
15	THRESHOLD (PEMKO #181_T)	ALUM
16	WEATHERSTRIP (THERMOSEAL™)	NEOPRENE
17	UNIVERSAL WALL ANCHOR REINFORCEMENT	STEEL
18	THRESHOLD (PEMKO 2001P)	ALUM
19	TUBE ANCHOR REINFORCEMENT	STEEL
20	CAL-ROYAL PIONEER SL/CSL SERIES GRADE 2 CYLINDRICAL LOCK	-
21	CAL-ROYAL T300 MAX. SECURITY HEAVY-DUTY DEAD BOLT GRADE 2 LOCK	-
22	#8-24 X 3/4" COMB. MACHINE / WOOD SCREW	STEEL
23	CAL-ROYAL 7700-V SERIES VERTICAL ROD EXIT DEVICE	-
90	VERTICAL ROD LATCH STRIKE PLATE @ HEAD	STEEL
91	VERTICAL ROD LATCH STRIKE PLATE @ SILL	STEEL

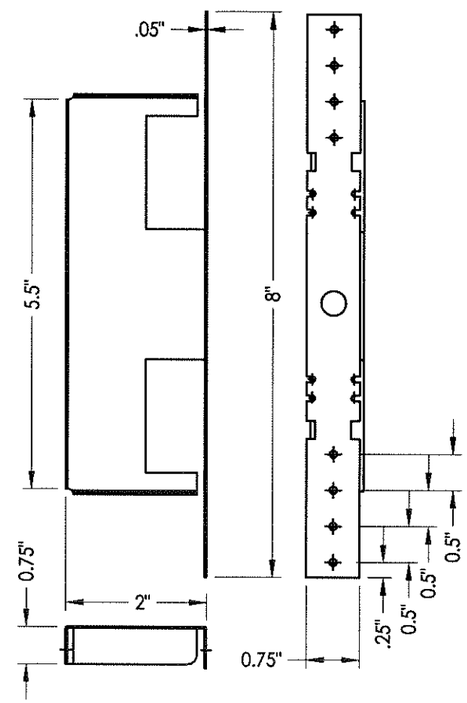

Q WOOD STRAP ANCHOR

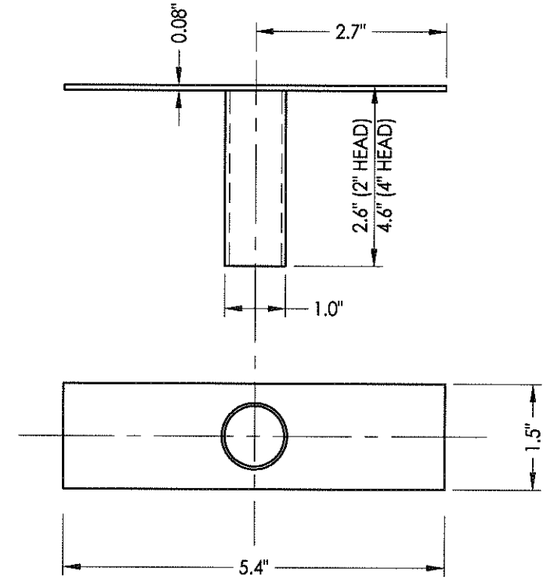

19 TUBE ANCHOR

STATE OF TEXAS
LYNDON F. SCHMIDT
104123
LICENSED
PROFESSIONAL ENGINEER
10-1-14

Documents Prepared By: Lyndon F. Schmidt, P.E.
TEXAS P.E. #104123

RW BUILDING CONSULTANTS, INC.
P.O. Box 230 Valrico FL 33595
Phone No.: 813.659.9197

TEXAS BOARD OF PROFESSIONAL ENGINEERS
CERTIFICATE OF REGISTRATION # F-11852

PRODUCT: CAL-ROYAL STEEL COMMERCIAL DOOR

PART OR ASSEMBLY: BILL OF MATERIALS AND COMPONENTS

NO.	DATE	BY	REVISIONS

DATE: 10/1/14
SCALE: N.T.S.
DWG. BY: JK
CHK. BY: LFS
DRAWING NO.: TX-4483
SHEET 7 OF 7

© 2014 R.W. BUILDING CONSULTANTS INC.

\\2012ess\RWBC\Clients\Cal-Royal NEW\Texas Dept of Ins\TDI - 472 Renewal\Drawings\Current\TEXAS 2014.dwg, 1-7