JELD-WEN®
FIBERLAST GLAZED
12-0x6-8
INSWING/OUTSWING COMPOSITE DOOR

GENERAL NOTES

1. THE PRODUCT SHOWN HEREIN IS DESIGNED TO COMPLY WITH THE 2006 IBC/IRC WITH THE 2006 TEXAS REVISIONS. PRODUCT HAS BEEN TESTED T O ASTM E330-02, E331-00, E283-04, E1886-05, E1996-05 & AAMA 1304-2.
2. 2X AND 1X WOOD BUCKS BY OTHERS, MUST BE ANCHORED PROPERLY TO TRANSFER LOADS TO THE STRUCTURE.
3. PRODUCT ANCHORS SHALL BE AS LISTED AND SPACED AS SHOWN ON DETAILS. ANCHOR EMBEDMENT TO BASE MATERIAL SHALL BE BEYOND WALL DRESSING OR STUCCO.
4. DESIGNED PRESSURE RATING SEE TABLE I, PAGE 1.
5. SCALE BASED ON 11x17 SHEET SIZE.
6. ALL 1X & 2X TO BE 0.55 SPECIFIC GRAVITY OR GREATER.
7. WHERE WATER INFILTRATION IS REQ'D, UNITS SHALL BE INSTALLED AT LOCATION PROTECTED BY OVERHANG SUCH THAT OVERHANG (OH) RATIO = OH LENGTH / OH HEIGHT IS EQUAL TO OR GREATER THAN 1.O.

DOOR LEAF CONSTRUCTION:

FACE SHEETS: THE FACE SHEETS ARE GLUED TO THE SUBSTRATE WITH LMC ADHESIVE.
CORE DESIGN: THE CORE CONSISTS OF 1.75-2.25 POUND DENSITY INJECTED POLYURETHANE
PANEL CONSTRUCTION: PANELS CONSIST OF TWO FIBERGLASS SKINS BONDED TO AURALAST TREATED PINE STILES AND TOP RAIL. THE BOTTOM RAIL IS A PVC/LVL COMPOSITE

FRAME CONSTRUCTION: THE FRAME JAMBS AND HEAD ARE CONSTRUCTED OF WOOD. THE OUTSWING SILL IS COMPRISED OF A COMPOSITE MATERIAL W/ ALUMINUM EXTRUSION. THE INSWING SILL IS COMPRISED OF A COMPOSITE MATERIAL WITH ALUMINUM EXTRUSION AND ADUSTABLE ALUMINUM RISER. TOP CORNERS ARE COPED, BUTTED, AND SEALED USING SILICONE AND FASTENED USING FOUR 16 GA. 7/16" X 2" LONG STAPLES PER CORNER. BOTTOM CORNERS ARE COPED, BUTTED, AND SEALED USING SILICONE AND FASTENED USING THREE 16 GA. 7/16" X 2" LONG STAPLES . THE VERTICAL MULL POST IS FASTENED THROUGH THE HEAD AND SILL USING THREE #8X2-1/2" SCREWS PER END. AT THE SILL, FOR INSWING PRODUCTS, A 5/8" HOLE IS DRILLED IN THE ALUMINUM RISER AND A RETAINING CAP IS INSTALLED TO RECIEVE THE ASTRAGAL BOLT. ON OUTSWING PRODUCTS, A 3/8" HOLE IS DRILLED AT THE CENTER OF THE FRAME SILL AND A METAL STRIKE PLATE IS FASTENED USING TWO #6 X 1 1/2" SCREWS TO RECEIVE THE BOTTOM ASTRAGAL BOLT. AT THE HEAD ON BOTH INSWING AND OUTSWING PRODUCTS, A 3/8" HOLE IS DRILLED AT THE CENTER OF THE FRAME HEAD AND A METAL STRIKE PLATE IS FASTENED USING TWO #8 X 2-1/2" SCREWS TO RECEIVE THE TOP ASTRAGAL BOLT. EACH FIXED PANEL IS SECURED INTO THE FRAME USING FOUR #8 X 2-1/2" PHILLIPS HEAD WOOD SCREWS FASTENED THROUGH THE JAMBS AND INTO EACH SIDE OF THE PANEL. ALL MULLION JOINERY AND THE FIXED PANELS / FRAME JOINERY ARE SEALED AT THE EXTERIOR USING DOW 1199 SILICONE.

MATERIAL PROTECTION

1. ALL LATCH/LOCK AND HINGE HARDWARE TO BE OF CORROSION RESISTANT MATERIAL OR CORROSION RESISTANT COATED.
2. ANCHORING COMPONENTS MUST MEET THE CORROSION RESISTANT STANDARDS AS IDENTIFIED IN THE FBC.

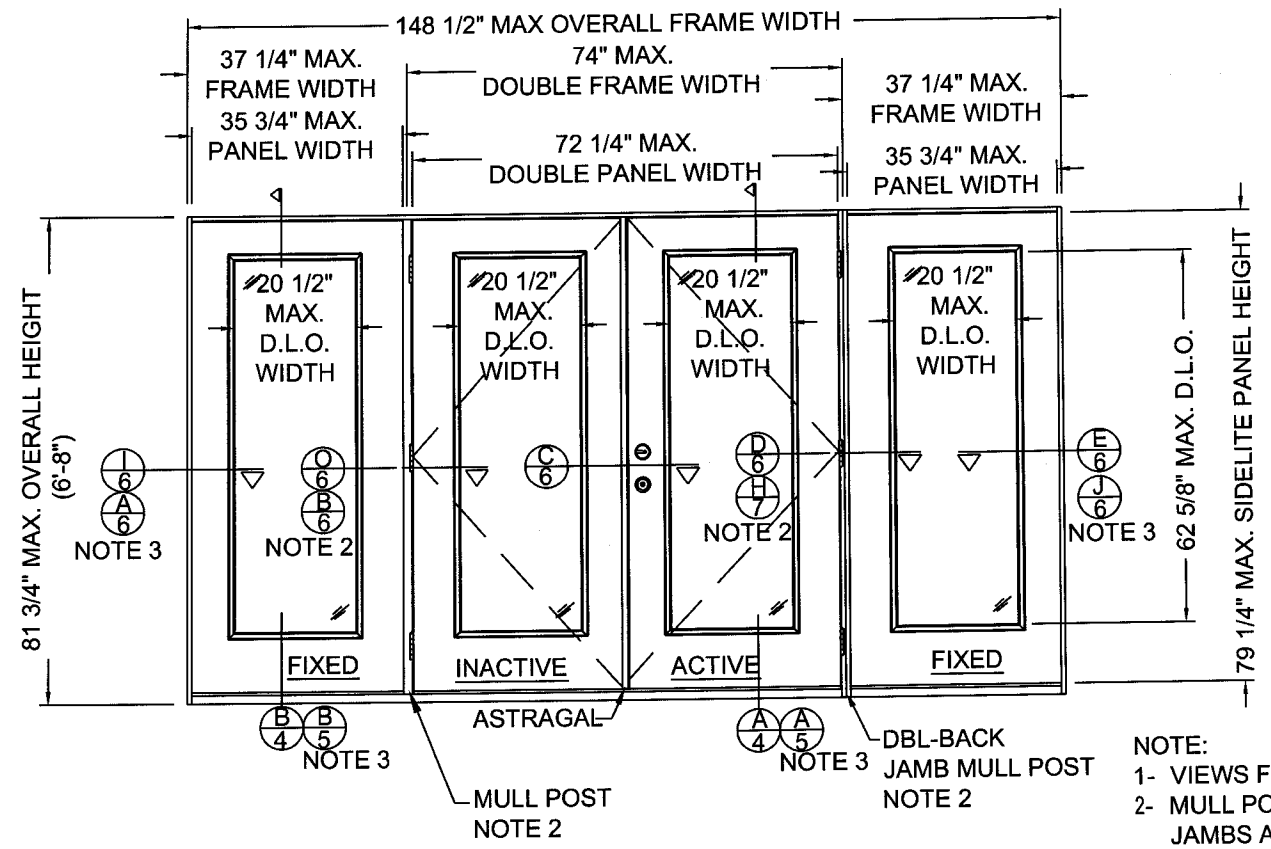

QUAD UNIT (OXXO)

NOTE:
1- VIEWS FROM INTERIOR.
2- MULL POSTS & DOUBLE BACK JAMBS ARE INTERCHANGEABLE.
3- MASONRY AND CONCRETE CONSTRUCTION.

TABLE OF CONTENTS

SHT #	DESCRIPTION
1	INSWING ELEVATIONS & GENERAL NOTES
2	INSWING ELEVATIONS
3	INSWING ELEVATIONS
4	INSWING VERTICAL CROSS SECTIONS & BILL OF MATERIALS
5	INSWING VERTICAL CROSS SECTIONS
6	INSWING HORIZONTAL CROSS SECTIONS
7	INSWING HORIZONTAL CROSS SECTIONS
8	OUTSWING VERTICAL CROSS SECTIONS & ELEVATIONS
9	OUTSWING VERTICALAL CROSS SECTIONS
10	OUTSWING ELEVATIONS
11	OUTSWING ELEVATIONS
12	OUTSWING HORIZONTAL CROSS SECTIONS
13	OUTSWING HORIZONTAL CROSS SECTIONS
14	ANCHORING LOCATIONS & DETAILS
15	ANCHORING LOCATIONS & DETAILS
16	ANCHORING LOCATIONS & DETAILS
17	ANCHORING LOCATIONS & DETAILS
18	UNIT COMPONENTS

DESIGN PRESSURE RATING

		DESIGN PRESSURE RATINGS:
		DOUBLE DOOR W/ OR W/O SIDELITES SINGLE DOOR W/ SIDELITES
INSWING	POSITIVE	+55
	NEGATIVE	-55
OUTSWING	POSITIVE	+55
	NEGATIVE	-55

TABLE 1

1-5-10
Kristina S. Daugherty
Texas P.E. No. 104390

JELD-WEN, INC.
3737 LAKEPORT BLVD.
KLAMATH FALLS, OR, 97601
PH. 541-882-3451

PRODUCT: FIBERLAST GLAZED IMPACT 12-0x6-8 INSWING/OUTSWING COMPOSITE DOOR
PART OR ASSEMBLY: TYPICAL INSWING ELEVATIONS & GENERAL NOTES

REVISIONS

NO.	DATE	BY

DATE: 12/09/09
SCALE: 3/8" = 1'
DWG. BY: GL
CHK. BY: S. FREY
DRAWING NO.: JW132009
SHEET 1 OF 18

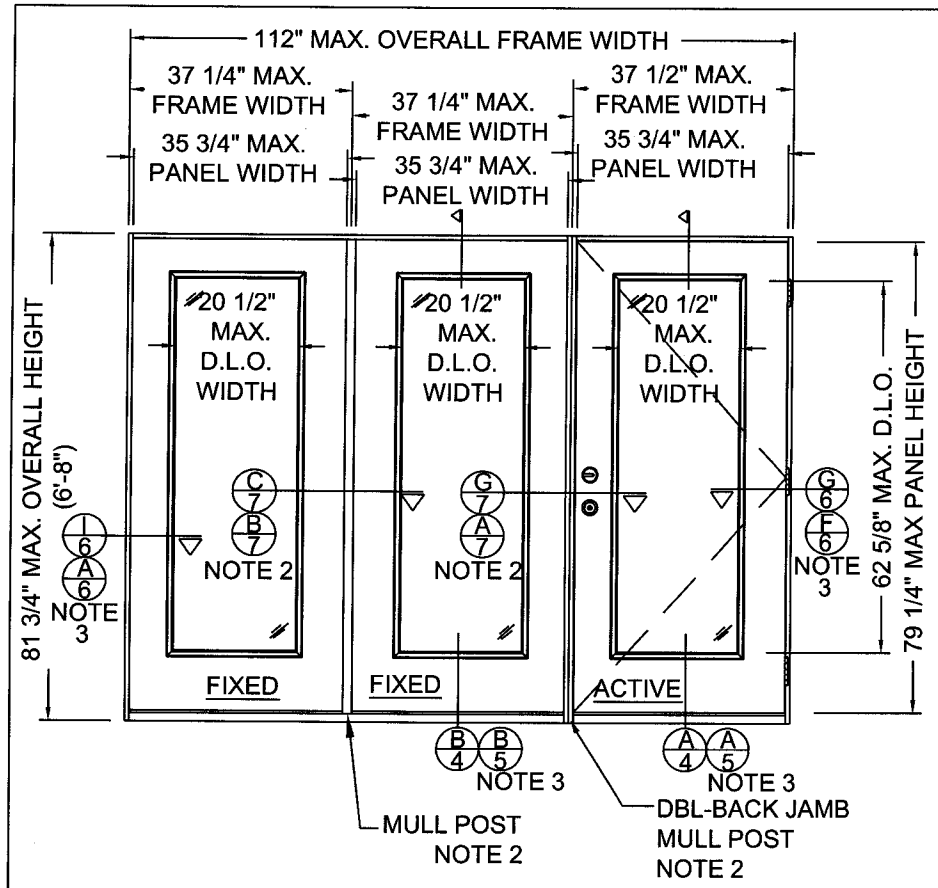

TRI UNIT (OOX) OR (XOO)
SCALE:3/8"=1'-0"

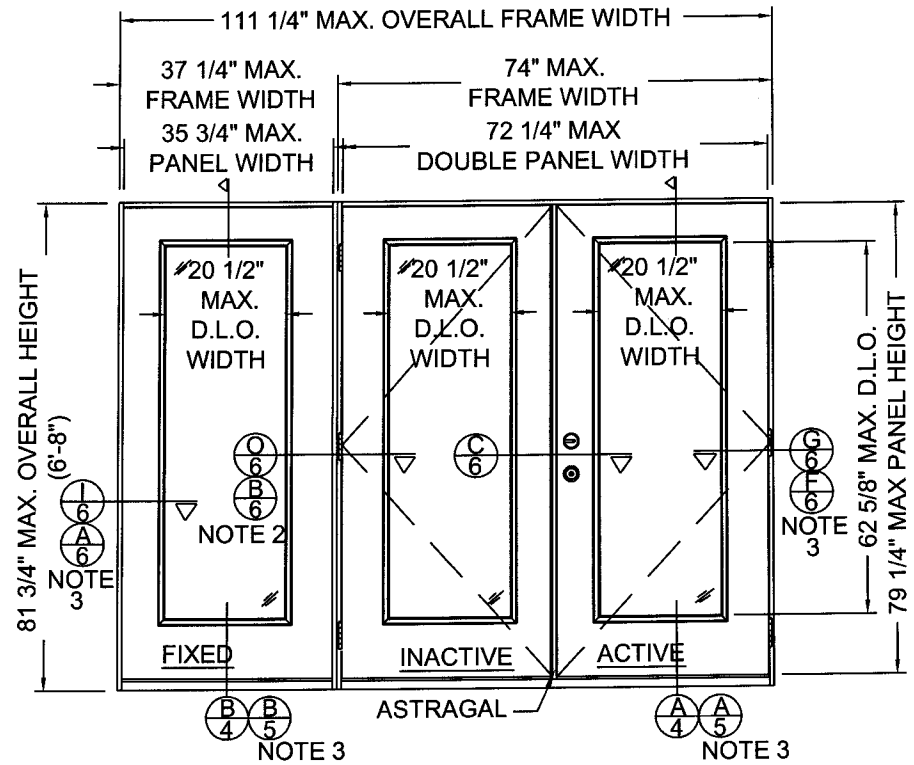

TRI UNIT (OXX) OR (XXO)
SCALE: 3/8" =1'-0"

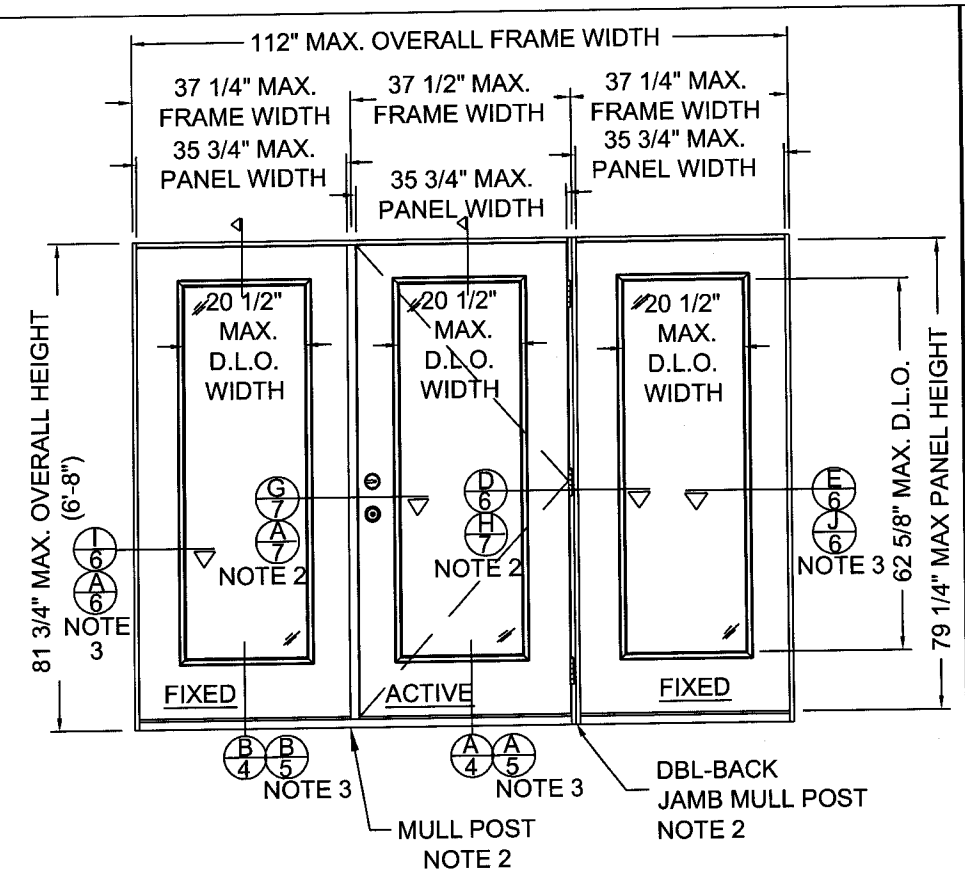

TRI UNIT (OXO)
SCALE: 3/8" =1'-0"

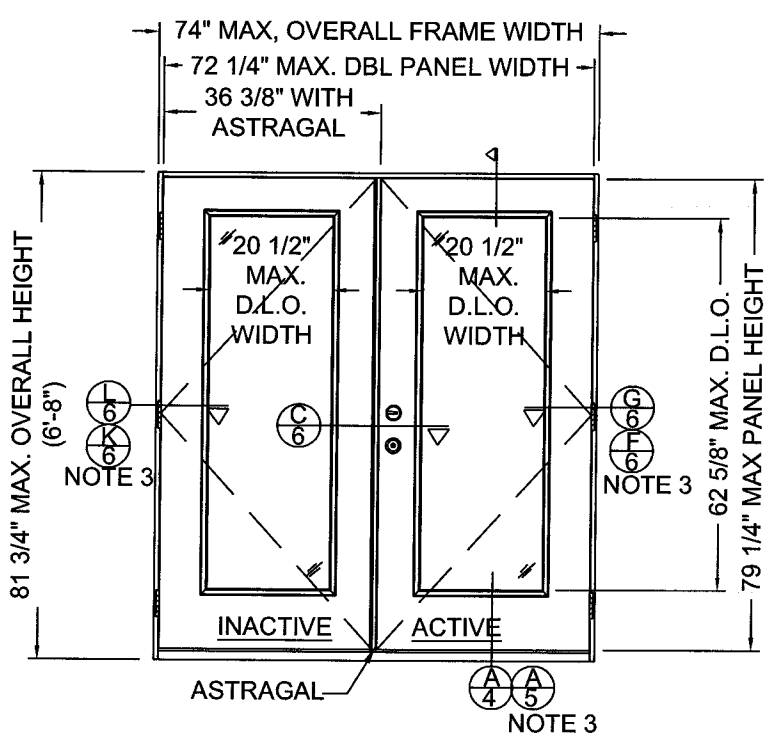

DUAL UNIT (XX)
SCALE: 3/8" =1'-0"

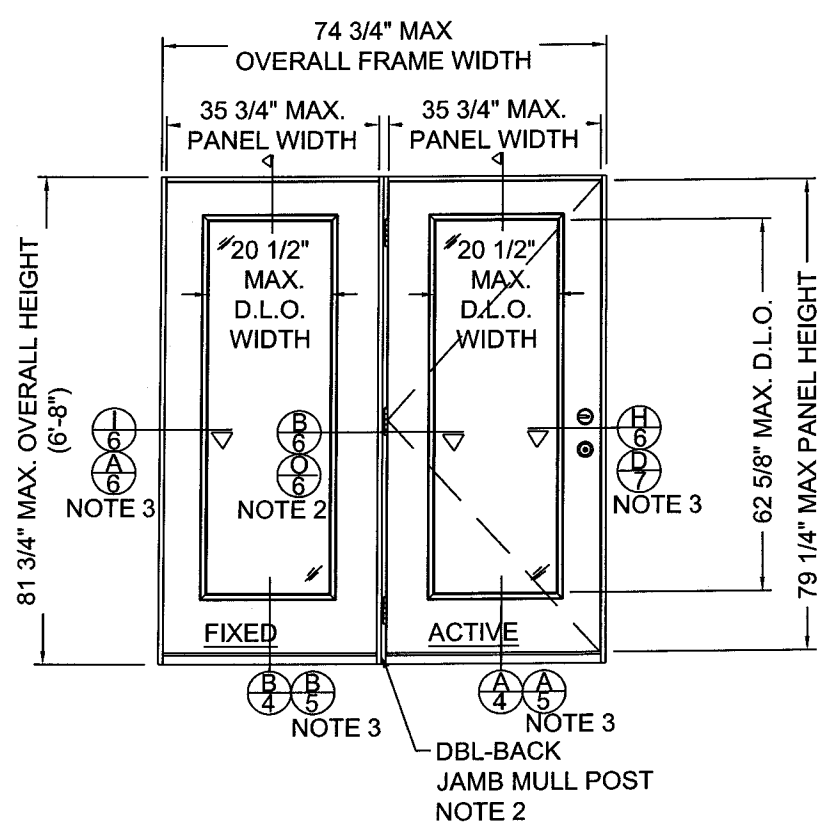

DUAL UNIT (OX) OR (XO)
SCALE: 3/8" =1'-0"

NOTE:
1- VIEWS FROM INTERIOR.
2- MULL POSTS & DOUBLE BACK JAMBS ARE INTERCHANGEABLE.
3- MASONRY AND CONCRETE CONSTRUCTION.

JELD-WEN, INC.
3737 LAKEPORT BLVD.
KLAMATH FALLS, OR, 97601
PH. 541-882-3451

PRODUCT: FIBERLAST GLAZED IMPACT 12-0x6-8 INSWING/OUTSWING COMPOSITE DOOR

PART OR ASSEMBLY: TYPICAL INSWING ELEVATIONS

NO.	DATE	BY

REVISIONS

Kristina S. Daugherty
Texas P.E. No. 104390

DATE: 12/09/09
SCALE: AS NOTED
DWG. BY: GL
CHK. BY: S. FREY
DRAWING NO.: JW132009
SHEET 2 OF 18

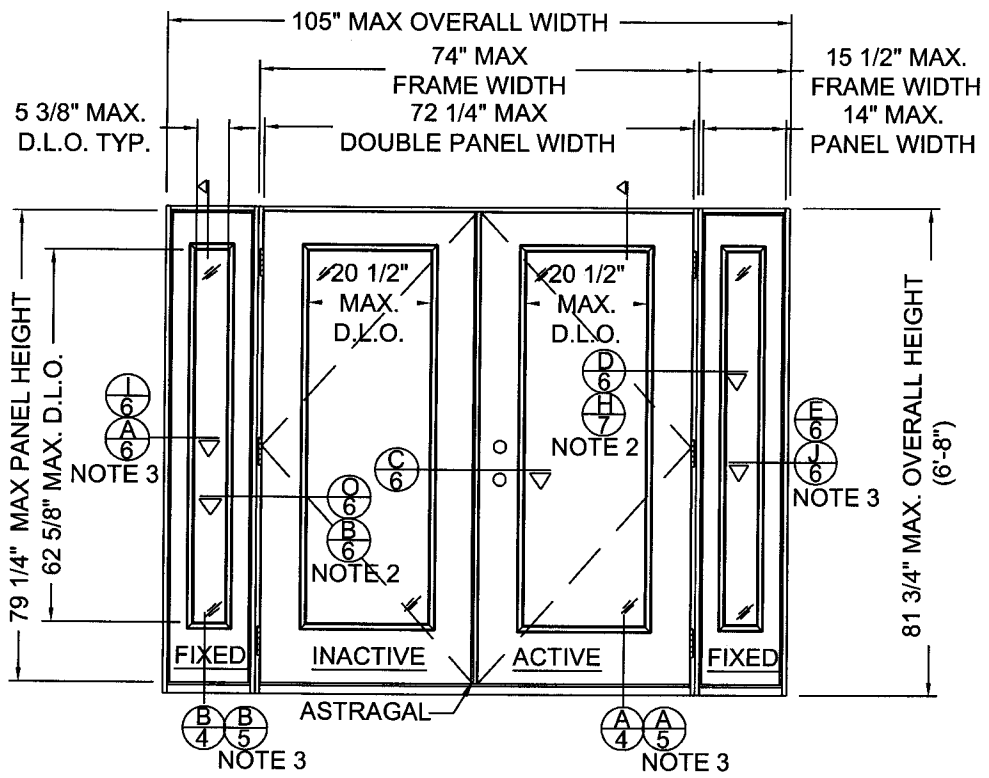

QUAD UNIT (OXXO)
SCALE: 3/8" =1'-0"

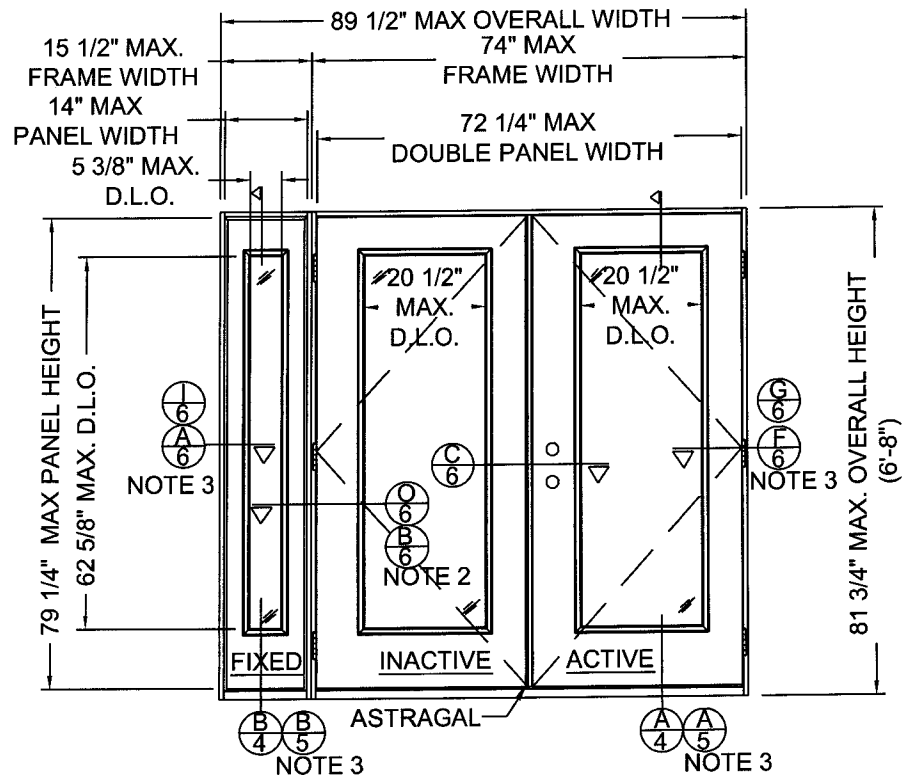

TRI UNIT (OXX) OR (XXO)
SCALE: 3/8" =1'-0"

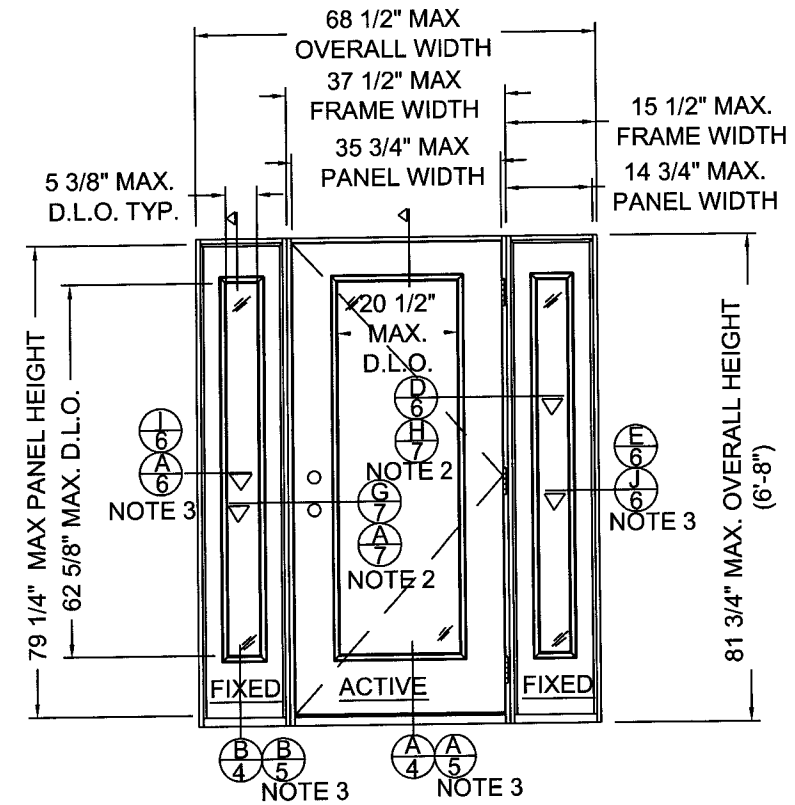

TRI UNIT (OXO)
SCALE: 3/8" =1'-0"

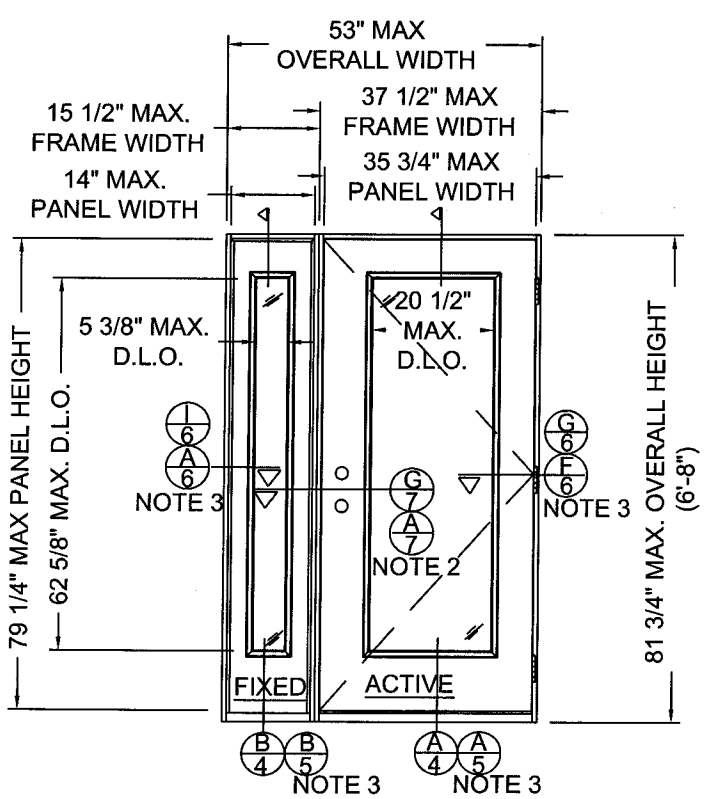

DUAL UNIT (OX) OR (XO)
SCALE: 3/8" =1'-0"

NOTE:
1- VIEWS FROM INTERIOR.
2- MULL POSTS & DOUBLE BACK JAMBS ARE INTERCHANGEABLE.
3- MASONRY AND CONCRETE CONSTRUCTION.

Kristina S. Daugherty
Texas P.E. No. 104390
1-5-10

JELD-WEN, INC.
3737 LAKEPORT BLVD.
KLAMATH FALLS, OR, 97601
PH. 541-882-3451

PRODUCT: FIBERLAST GLAZED IMPACT 12-0x6-8 INSWING/OUTSWING COMPOSITE DOOR
PART OR ASSEMBLY: TYPICAL INSWING ELEVATIONS

NO.	DATE	BY

REVISIONS

DATE: 12/09/09
SCALE: AS NOTED
DWG. BY: GL
CHK. BY: S. FREY
DRAWING NO.: JW132009
SHEET 3 OF 18

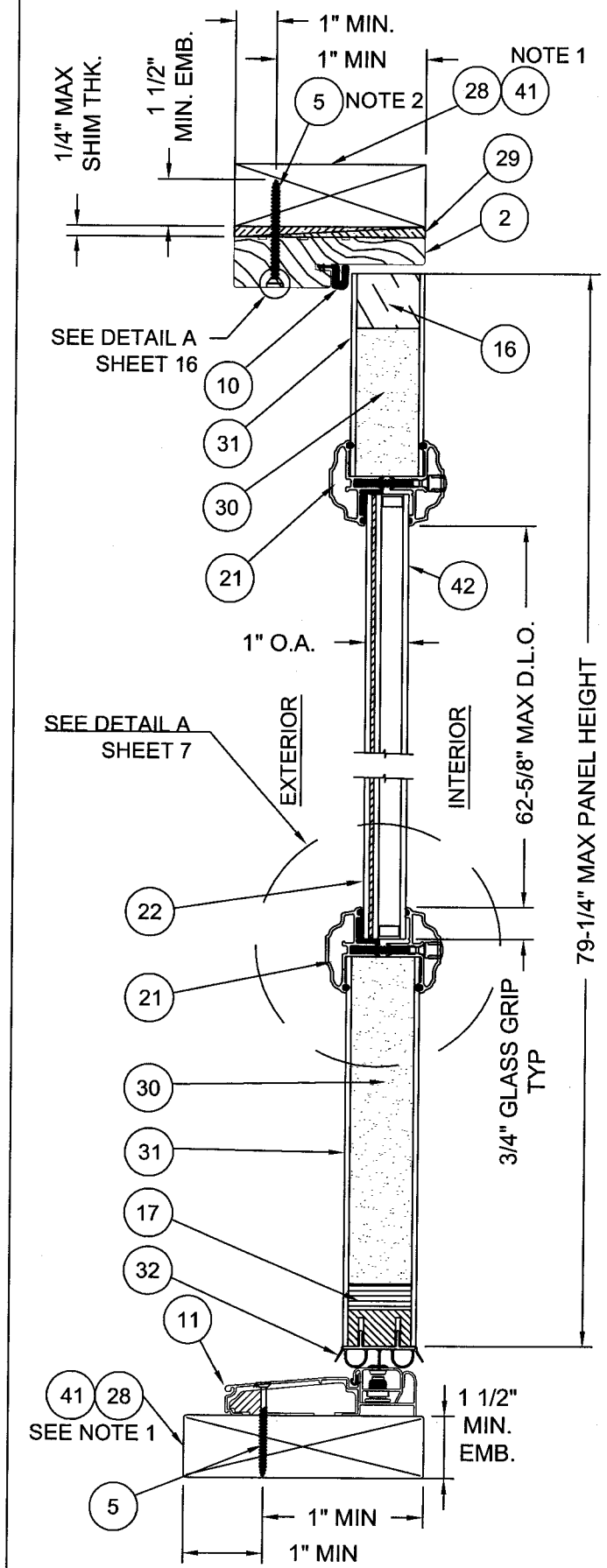

A 4 VERTICAL CROSS SECTION, DOOR TYP.
WOOD FRAME INSTALLATION

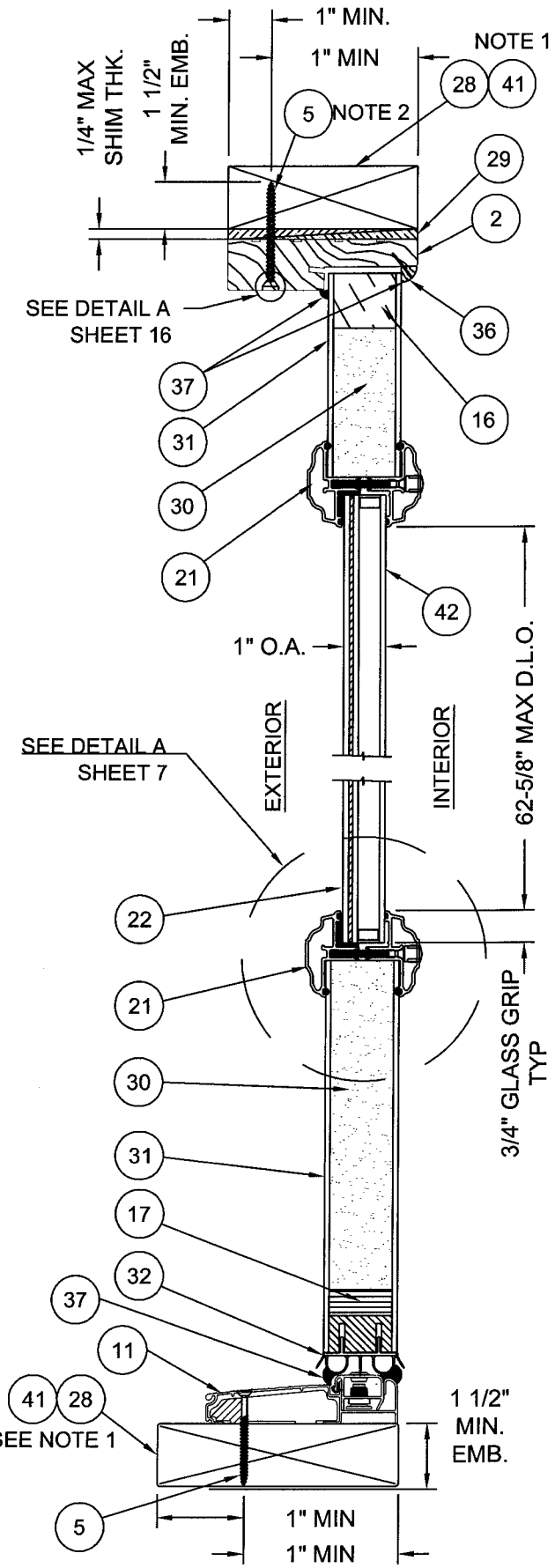

B 4 VERTICAL CROSS SECTION
SIDE-LITE TYP.
WOOD FRAME INSTALLATION

Item	DESCRIPTION	Material
1	HINGE JAMB (1 1/4" X 4-9/16" FINGERJOINTED PINE)	PINE
2	HEAD JAMB (1 1/4" X 4-9/16" FINGERJOINTED PINE)	PINE
3	LATCH JAMB (1-1/4" X 4-9/16" FINGERJOINTED PINE)	PINE
4	SIDELITE JAMB (1-1/4" X 4-9/16" FINGERJOINTED PINE)	PINE
5	#10 PHILLIPS FLATHEAD WOOD SCREW WITH 1 1/2" MIN. EMBEDMENT	STEEL
6	4" X 4" BUTT HINGE 12GA. (.089" MIN)	STEEL
7	#9 X 3/4" PHILLIPS FLATHEAD WOOD SCREW	STEEL
8	#10 X 1 1/2" PHILLIPS FLATHEAD WOOD SCREW	STEEL
9	3/16" ITW BUILDEX TAPCON WITH 1 1/4" MIN. EMBEDMENT	STEEL
10	COMPRESSION WEATHERSTRIP (QEBD-650)	FOAM
11	INSWING THRESHOLD ENDURA MODEL ZAILAALP45MFW 6063-T5	ALUMINUM
12	#8 X 2 1/2" PHILLIPS HEAD WOOD SCREW	STEEL
13	EXTRUDED ASTRAGAL (ENDURA) 6063-T6 AL	ALUMINUM
14	#8 X 1" FLAT HEAD WOOD SCREW	STEEL
15	ENDURA HURRICANE STRIKE PLATE	STEEL
16	TOP RAIL FINGERJOINTED PINE W/ AURALAST	PINE
17	BOTTOM RAIL PVC CAPPED LAMINATED VENEER LUMBER	PVC - LVL
18	HINGE SIDE STILE FINGERJOINTED PINE W/ AURALAST	PINE
19	LATCH SIDE STILE FINGERJOINTED PINE W/ AURALAST	PINE
20	INTERNAL STILE FULL LENGTH LAMINATED VENEER LUMBER	LVL
21	ODL LITE - FRAME (ALUMIN. 6063 T5)	ALUMINUM
22	3/8" LAMINATED ANNEALED GLASS	GLASS
23	16 Ga. 7/16" CROWN X 2" LONG STAPLES	STEEL
24	CORRUGATED NAIL 1/2" X 1-1/16"	STEEL
25	KWIKSET LOCK SERIES 400	STEEL
26	KWIKSET DEADBOLT SERIES 660	STEEL
27	#8 X 2" PHILLIPS FLATHEAD WOOD SCREW	STEEL
28	2X WOOD BUCK GRADE 2 SOUTHERN YELLOW PINE	WOOD
29	NON-COMPRESSION SHIM	WOOD
30	INJECTED POLYURETHANE (1.75 TO 2.25 lbs. DENSITY) MFG BY JELD-WEN	FOAM
31	DOOR SKIN FIBERLAST MATERIAL, FIBERGLASS THICKNESS 0.120 NOMINAL	FIBERGLASS
32	INSWING VINYL DOOR BOTTOM SWEEP	VINYL
33	CORNER PADS 2", LOCATED AT THE BOTTOM OF EACH JAMB LEG SETTING ON TOP OF THE SILL, BEHIND THE WEATHERSTRIP	FOAM
34	#8 X 2-1/2" PHILLIPS FLATHEAD WOOD SCREW	STEEL
35	SOLID MULL POST, LAMINATED VENEER LUMBER (LVL)	WOOD
36	3/8" ROUNDED SCOTIA	WOOD
37	SILICONE BEAD DOW 1199	SILICONE
38	DOUBLE BACK JAMB, LAMINATED VENEER LUMBER (LVL)	LVL
39	OUTSWING THRESHOLD ENDURA MODEL FOB4566AMF 6063-T5	ALUMINUM
40	ASTRAGAL BOLT 0.313 DIA.	STEEL
41	OPTIONAL 1X WOOD BUCK GRADE 2 SOUTHERN YELLOW PINE	WOOD
42	1/8" TEMPERED GLASS	GLASS

NOTE 1: 1X MAY BE UTILIZED AS AN OPTION AS LONG AS MINIMUM ANCHOR EMBEDMENT DEPTH, INTO MASONRY, CONCRETE, OR WOOD, IS MAINTAINED.

NOTE 2: OPTIONALLY, ANCHOR CAN BE PLACED IN NARROW SECTION OF HEAD OR JAMB

JELD-WEN, INC.
3737 LAKEPORT BLVD.
KLAMATH FALLS, OR, 97601
PH. 541-882-3451

PRODUCT: FIBERLAST GLAZED IMPACT 12-0x6-8
PART OR ASSEMBLY: INSWING/OUTSWING COMPOSITE DOOR
INSWING VERTICAL CROSS SECTIONS & BILL OF MATERIALS

NO.	DATE	REVISIONS	BY

1-5-10
Kristina S. Daugherty
Texas P.E. No. 104390

DATE: 12/09/09
SCALE: 3"=1'
DWG. BY: JPR
CHK. BY: S. FREY
DRAWING NO.: JW132009
SHEET 4 OF 18

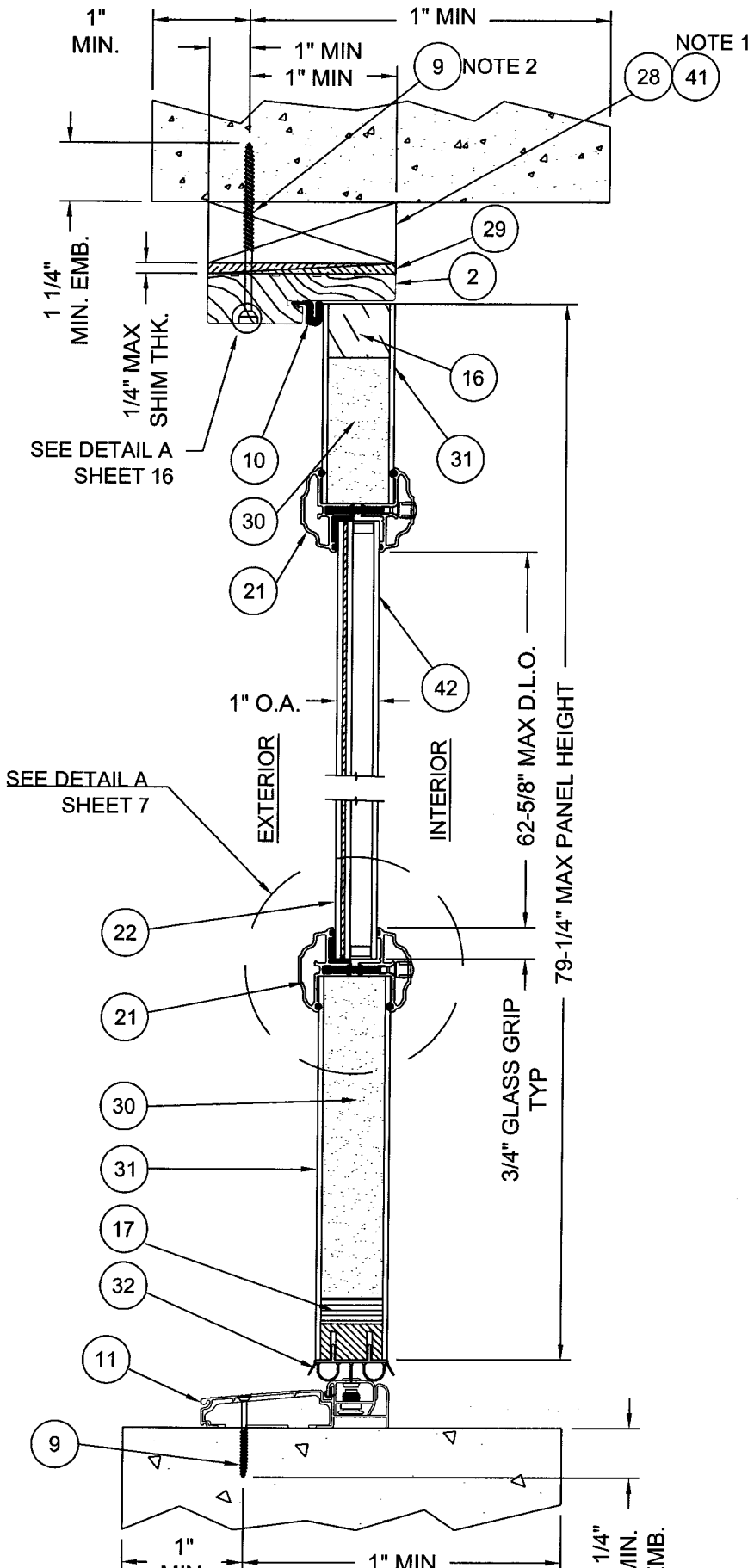

A 5 VERTICAL CROSS SECTION, DOOR TYP.
MASONRY AND CONCRETE INSTALLATION

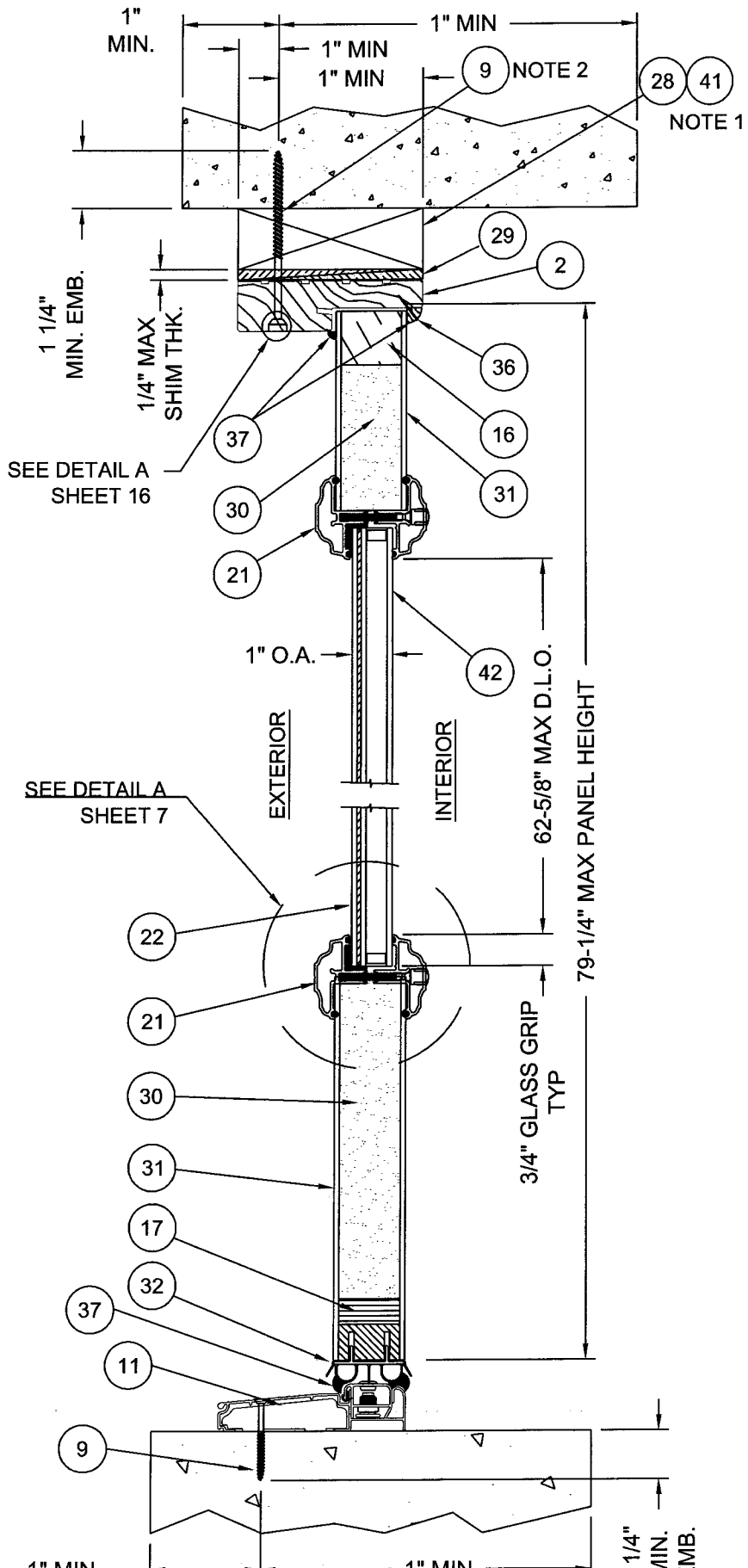

B 5 VERTICAL CROSS SECTION, SIDE-LITE TYP.
MASONRY AND CONCRETE INSTALLATION

NOTE 1: 1X MAY BE UTILIZED AS AN OPTION AS LONG AS MINIMUM ANCHOR EMBEDMENT DEPTH, INTO MASONRY, CONCRETE, OR WOOD, IS MAINTAINED.

NOTE 2: OPTIONALLY, ANCHOR CAN BE PLACED IN NARROW SECTION OF HEAD OR JAMB

JELD-WEN, INC.
3737 LAKEPORT BLVD.
KLAMATH FALLS, OR, 97601
PH. 541-882-3451

PRODUCT: FIBERLAST GLAZED IMPACT 12-0x6-8 INSWING/OUTSWING COMPOSITE DOOR

PART OR ASSEMBLY: INSWING VERTICAL CROSS SECTIONS MASONRY/CONCRETE

NO.	DATE	REVISIONS	BY

Kristina S. Daugherty
Texas P.E. No. 104390
1-5-10

DATE: 12/09/09
SCALE: AS NOTED
DWG. BY: GL
CHK. BY: S. FREY
DRAWING NO.: JW132009
SHEET 5 OF 18

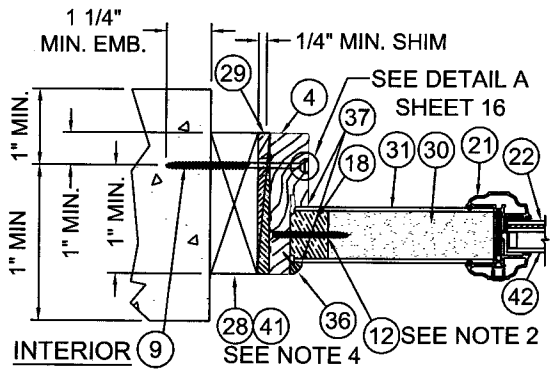

A 6 HORIZONTAL CROSS SECTION
VIEW AT FIXED PANEL/SIDE JAMB
(MASONRY AND CONCRETE INSTALL)

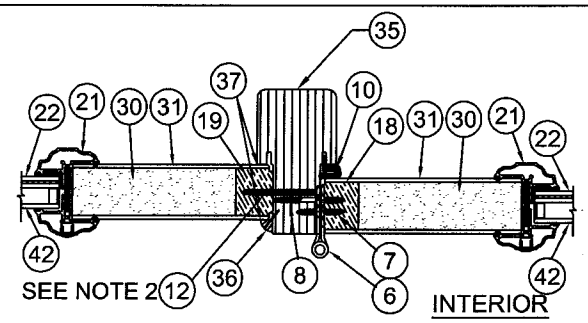

B 6 HORIZONTAL CROSS SECTION
VIEW AT SOLID MULL POST

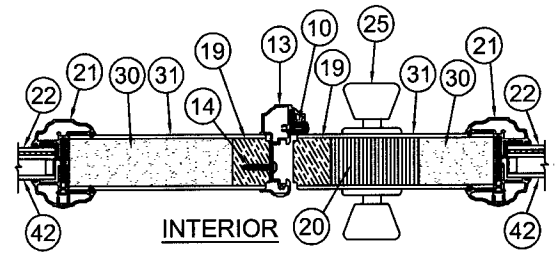

C 6 HORIZONTAL CROSS SECTION
VIEW AT ASTRAGAL

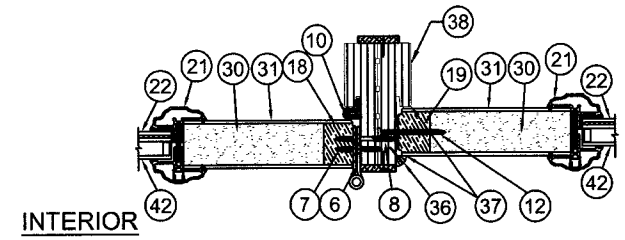

D 6 HORIZONTAL CROSS SECTION
VIEW AT DBL JAMB

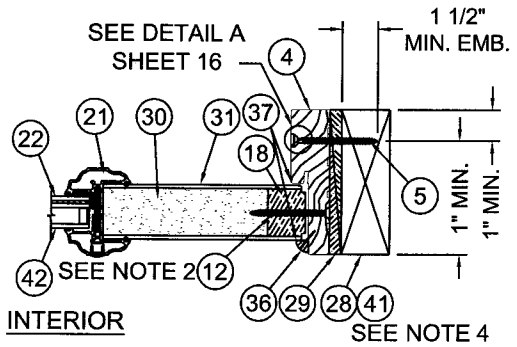

E 6 HORIZONTAL CROSS SECTION
VIEW AT FIXED PANEL/SIDE JAMB
(WOOD INSTALL)

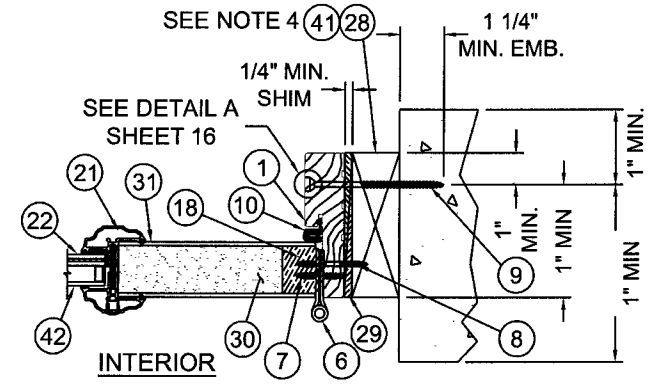

F 6 HORIZONTAL CROSS SECTION
VIEW AT DOOR HINGE/SIDE JAMB
(MASONRY AND CONCRETE INSTALL)

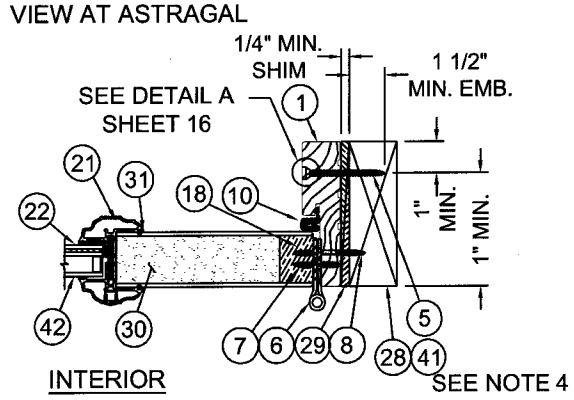

G 6 HORIZONTAL CROSS SECTION
VIEW AT DOOR HINGE/SIDE JAMB
(WOOD INSTALL)

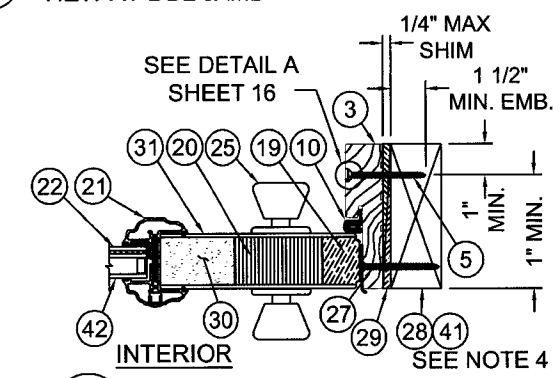

H 6 HORIZONTAL CROSS SECTION
VIEW AT DOOR LATCH/SIDE JAMB
(WOOD INSTALL)

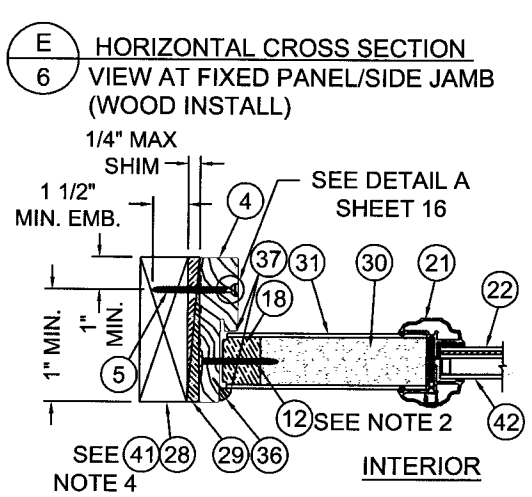

I 6 HORIZONTAL CROSS SECTION
VIEW AT FIXED PANEL/SIDE JAMB
(WOOD INSTALL)

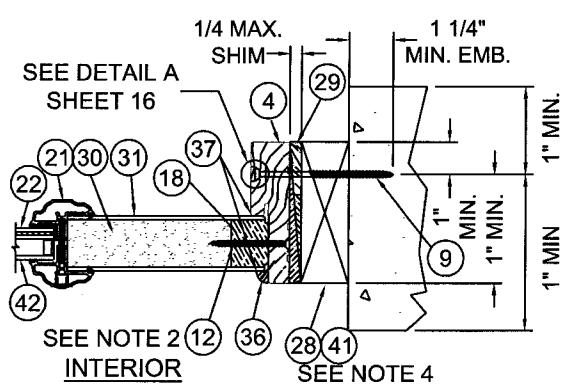

J 6 HORIZONTAL CROSS SECTION
VIEW AT FIXED PANEL/SIDE JAMB
(MASONRY AND CONCRETE INSTALL)

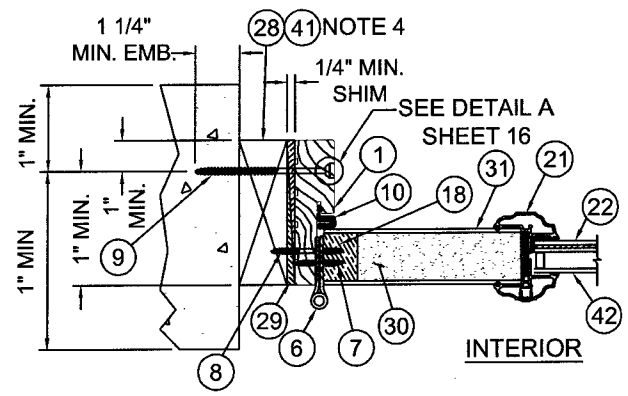

K 6 HORIZONTAL CROSS SECTION
VIEW AT DOOR HINGE/SIDE JAMB
(MASONRY AND CONCRETE INSTALL)

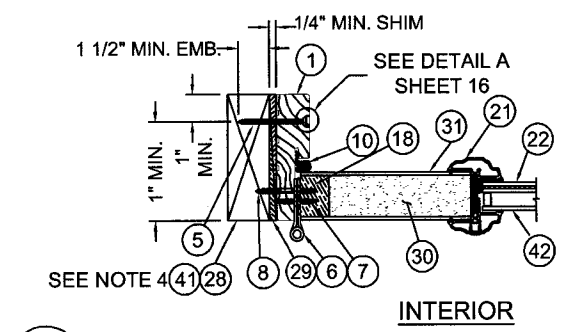

L 6 HORIZONTAL CROSS SECTION
VIEW AT DOOR HINGE/SIDE JAMB
(WOOD INSTALL)

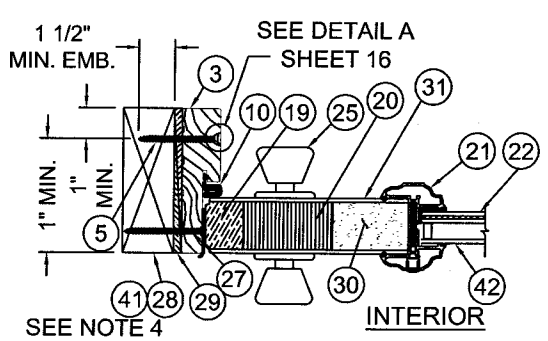

M 6 HORIZONTAL CROSS SECTION
VIEW AT DOOR LATCH/SIDE JAMB
(WOOD INSTALL)

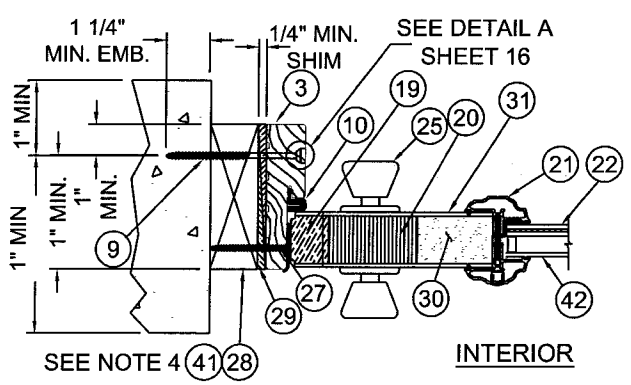

N 6 HORIZONTAL CROSS SECTION
VIEW AT DOOR LATCH/SIDE JAMB
(MASONRY AND CONCRETE INSTALL)

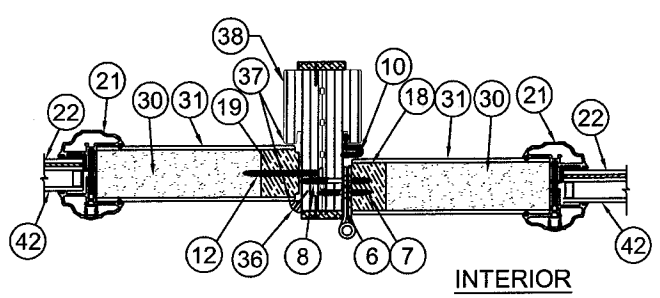

O 6 HORIZONTAL CROSS SECTION
VIEW AT DBL JAMB POST

NOTES:
1. FOR ANCHOR SPACING, SEE SHEETS 14, 15, 16 & 17.
2. SPACING FOR ITEM #12 FROM TOP DOWN: 6"-28 $\frac{5}{8}$"-50$\frac{7}{8}$"-73$\frac{1}{4}$".
3. ASTRAGAL SCREW PATTERN SPACING FOR ITEM #13 FROM TOP DOWN: 1/2", 2", 3 1/2", 20", 24 3/4", 39".
4. 1X MAY BE UTILIZED AS AN OPTION AS LONG AS MINIMUM ANCHOR EMBEDMENT DEPTH, INTO MASONRY, CONCRETE, OR WOOD, IS MAINTAINED.
5. TAPCON (ITEM #9) SPACING BETWEEN ANCHORS SAME AS WOOD SCREW CONFIGURATION.
6. OPTIONALLY, ANCHOR CAN BE PLACED IN NARROW SECTION OF HEAD OR JAMB.

JELD-WEN, INC.
3737 LAKEPORT BLVD.
KLAMATH FALLS, OR, 97601
PH. 541-882-3451

PRODUCT: FIBERLAST GLAZED IMPACT 12-0x6-8 INSWING/OUTSWING COMPOSITE DOOR

PART OR ASSEMBLY: INSWING HORIZONTAL CROSS SECTIONS

NO.	DATE	REVISIONS	BY

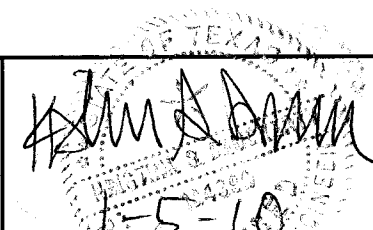

Kristina S. Daugherty
Texas P.E. No. 104390

DATE: 12/09/09
SCALE: 3"=1'
DWG. BY: GL
CHK. BY: S. FREY
DRAWING NO.: JW132009
SHEET 6 OF 18

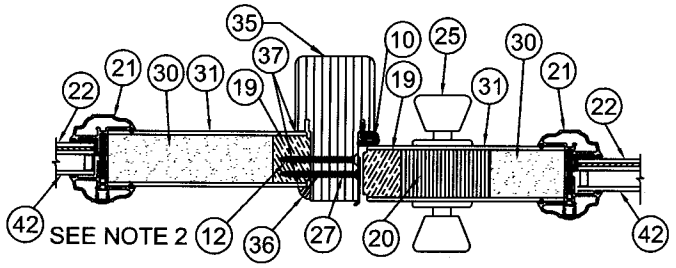

A / 7 HORIZONTAL CROSS SECTION
VIEW AT SOLID MULL POST

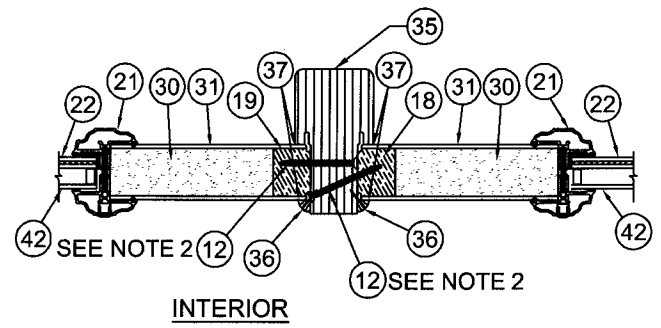

B / 7 HORIZONTAL CROSS SECTION
VIEW AT SOLID MULL POST

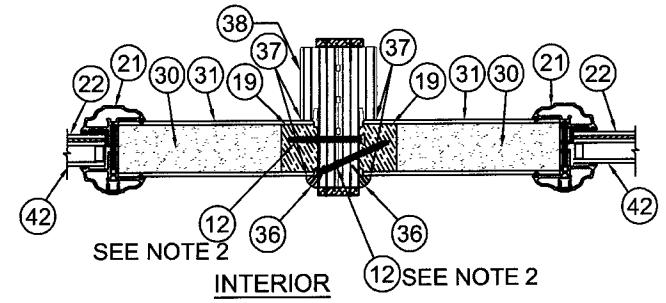

C / 7 HORIZONTAL CROSS SECTION
VIEW AT DBL BACK JAMB

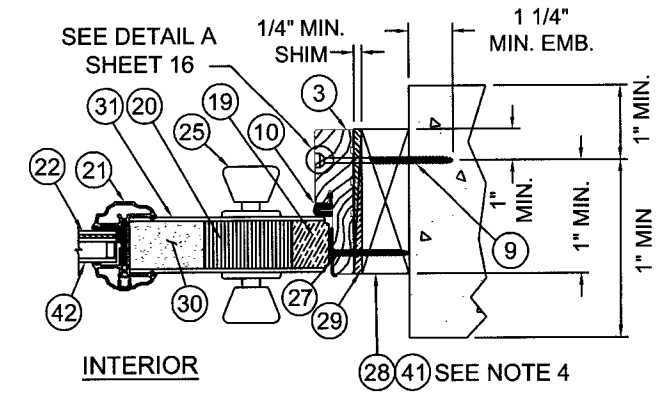

D / 7 HORIZONTAL CROSS SECTION
VIEW AT DOOR LATCH/SIDE JAMB
(MASONRY AND CONCRETE INSTALL)

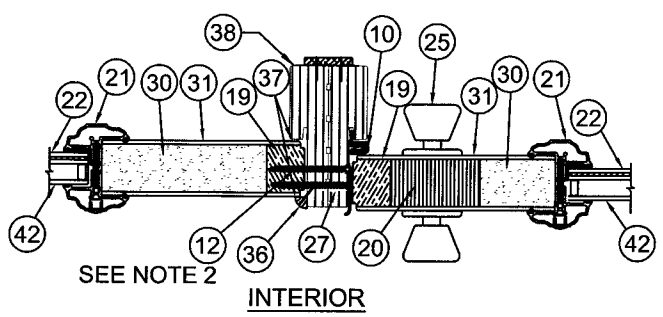

G / 7 HORIZONTAL CROSS SECTION
VIEW AT DBL BACK JAMB

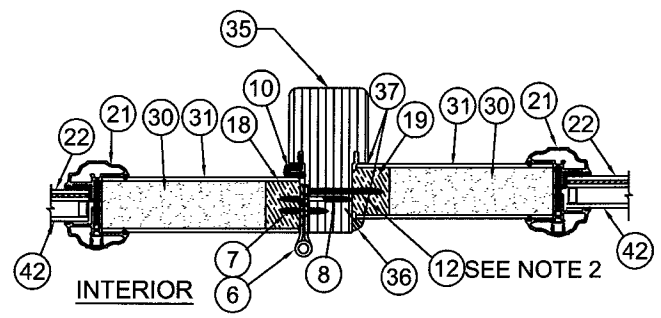

H / 7 HORIZONTAL CROSS SECTION
VIEW AT SOLID MULL POST

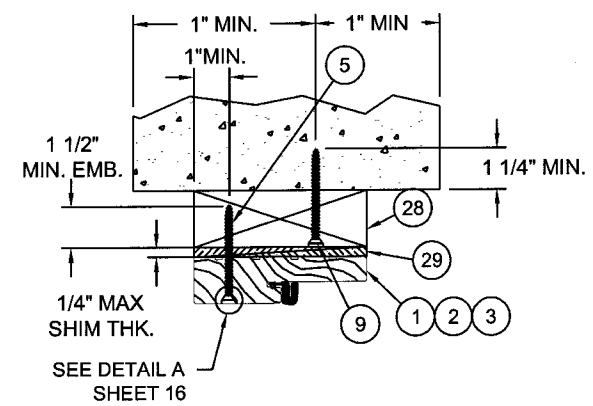

OPTIONAL MASONRY AND CONCRETE INSTALLATION
FOR HEADERS AND JAMBS
SEE NOTE 5, THIS PAGE

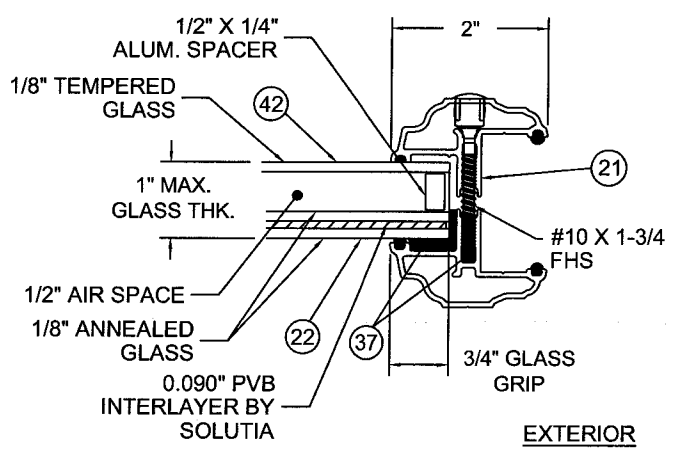

GLAZING DETAIL A
SCALE: 6" =1'-0"

NOTES:
1. FOR ANCHOR SPACING, SEE SHEETS 14, 15, 16 & 17.
2. SPACING FOR ITEM #12 FROM TOP DOWN: 6"-28 $\frac{5}{8}$"-50$\frac{7}{8}$"-73$\frac{1}{4}$".
3. ASTRAGAL SCREW PATTERN SPACING FOR ITEM #13 FROM TOP DOWN: 1/2", 2", 3 1/2", 20", 24 3/4", 39".
4. 1X MAY BE UTILIZED AS AN OPTION AS LONG AS MINIMUM ANCHOR EMBEDMENT DEPTH, INTO MASONRY, CONCRETE, OR WOOD, IS MAINTAINED.
5. TAPCON (ITEM #9) SPACING BETWEEN ANCHORS SAME AS WOOD SCREW CONFIGURATION.
6. OPTIONALLY, ANCHOR CAN BE PLACED IN NARROW SECTION OF HEAD OR JAMB.

JELD-WEN, INC.
3737 LAKEPORT BLVD.
KLAMATH FALLS, OR, 97601
PH. 541-882-3451

PRODUCT: FIBERLAST GLAZED 12-0x6-8 COMPOSITE DOOR

PART OR ASSEMBLY: INSWING HORIZONTAL CROSS SECTIONS

NO.	DATE	REVISIONS	BY

1-5-10
Kristina S. Daugherty
Texas P.E. No. 104390

DATE: 12/09/09
SCALE: 3"=1'
DWG. BY: GL
CHK. BY: S. FREY
DRAWING NO.: JW132009
SHEET 7 OF 18

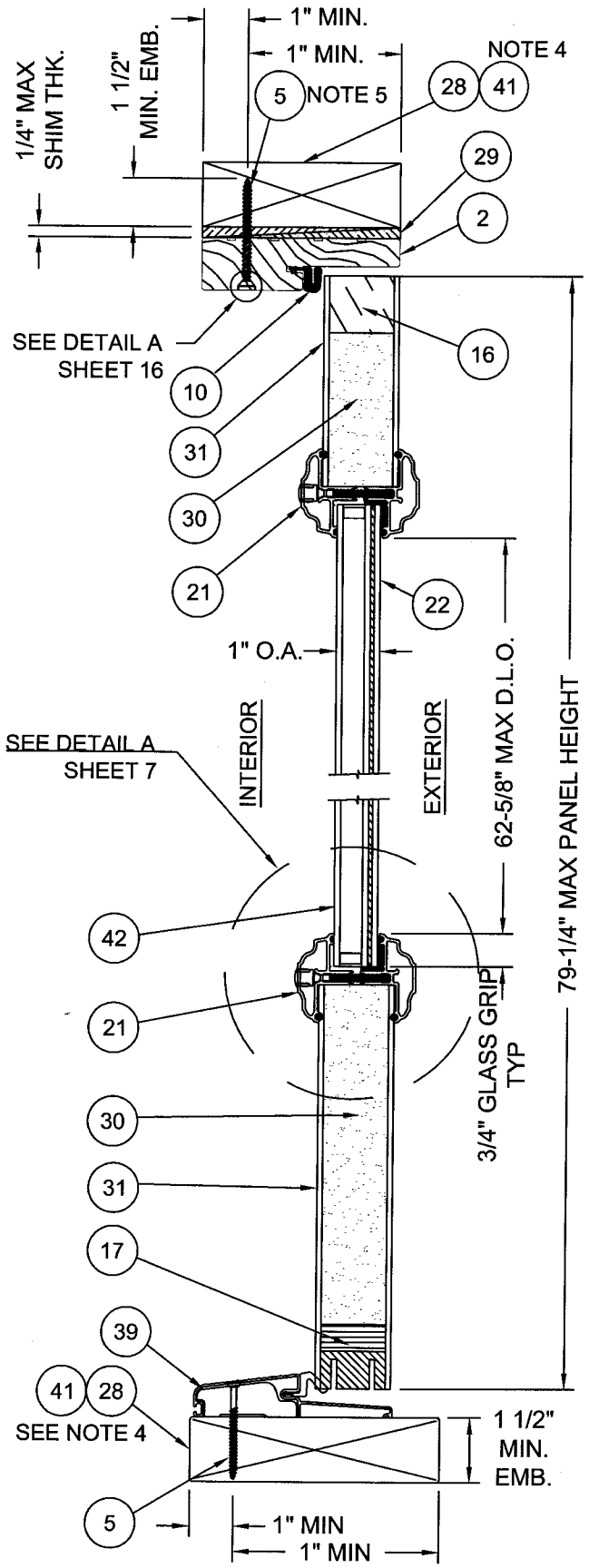

A/8 VERTICAL CROSS SECTION DOOR TYP.
WOOD FRAME INSTALLATION

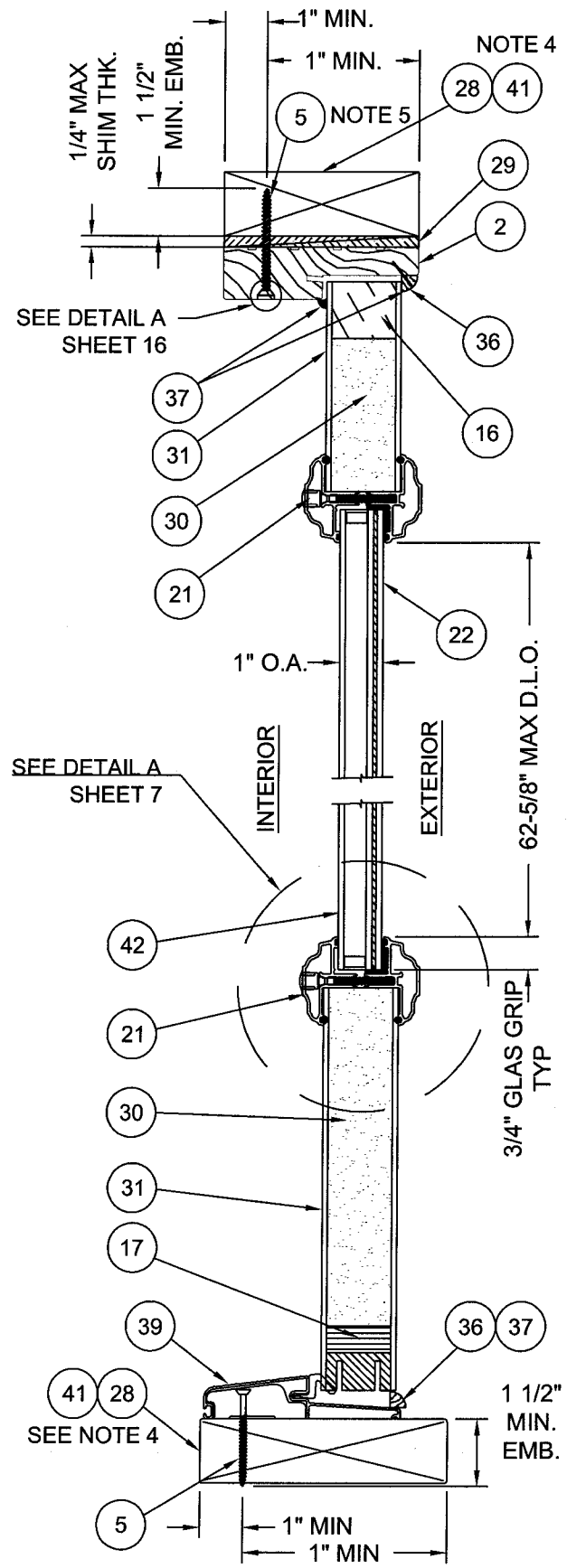

B/8 VERTICAL CROSS SECTION, SIDELITE TYP.
WOOD FRAME INSTALLATION

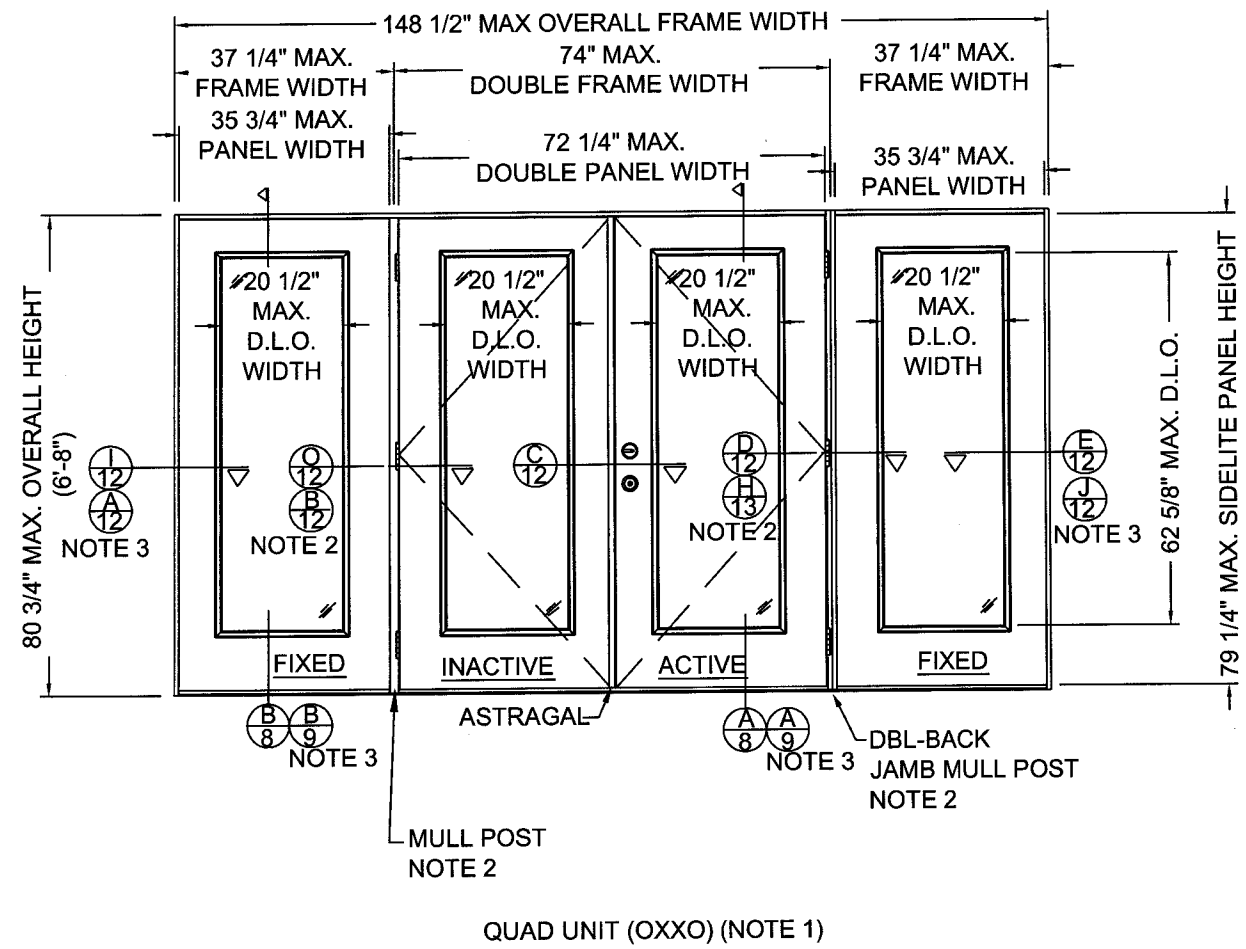

QUAD UNIT (OXXO) (NOTE 1)

NOTE:
1- ALL VIEWS FROM EXTERIOR.
2- MULL POSTS & DOUBLE BACK JAMBS ARE INTERCHANGEABLE.
3- MASONRY AND CONCRETE CONSTRUCTION.
4- 1X MAY BE UTILIZED AS AN OPTION AS LONG AS MINIMUM ANCHOR EMBEDMENT DEPTH, INTO MASONRY, CONCRETE, OR WOOD, IS MAINTAINED
5- OPTIONALLY, ANCHOR CAN BE PLACED IN NARROW SECTION OF HEAD OR JAMB.

Kristina S. Daugherty
Texas P.E. No. 104390
1-5-10

JELD-WEN, INC.
3737 LAKEPORT BLVD.
KLAMATH FALLS, OR, 97601
PH. 541-882-3451

PRODUCT: FIBERLAST GLAZED IMPACT 12-0x6-8 INSWING/OUTSWING COMPOSITE DOOR

PART OR ASSEMBLY: OUTSWING ELEVATION & (WOOD) VERTICAL CROSS SECTION

NO.	DATE	REVISIONS	BY

DATE: 12/09/09
SCALE: 3/8" = 1'
DWG. BY: GL
CHK. BY: S. FREY
DRAWING NO.: JW132009
SHEET 8 OF 18

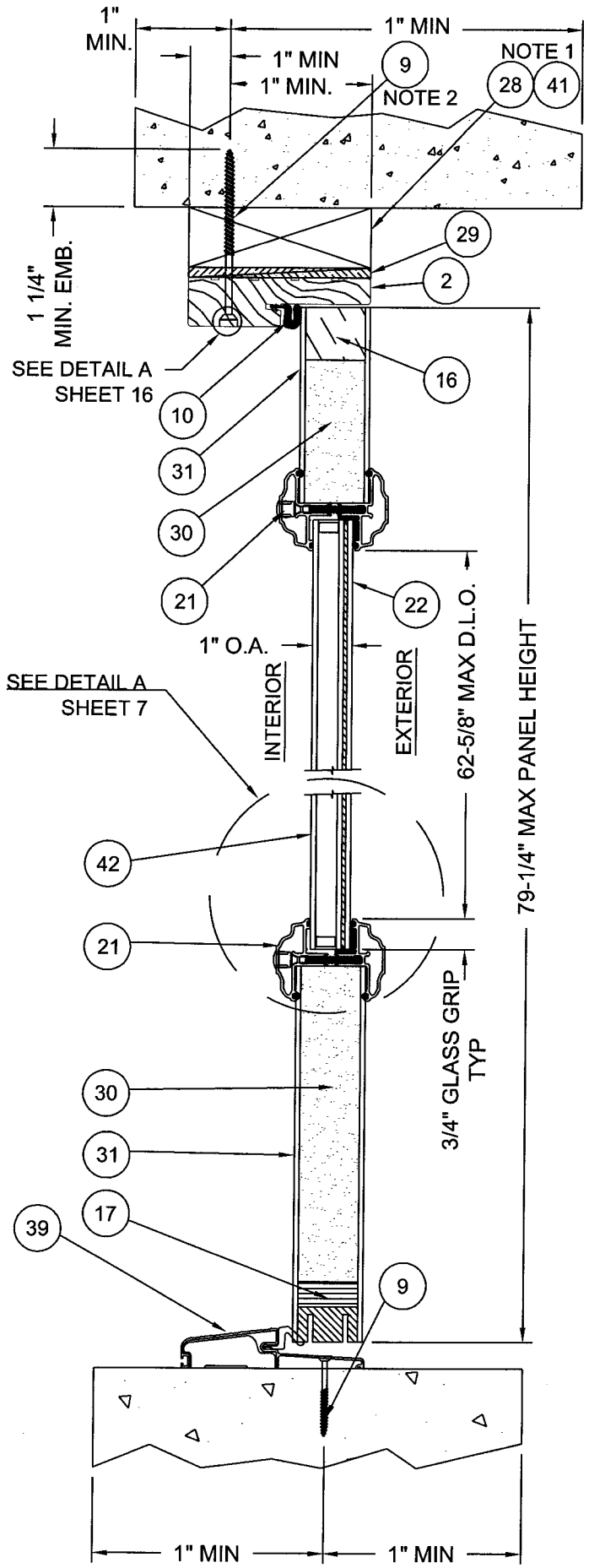

A/9 VERTICAL CROSS SECTION
ACTIVE & INACTIVE DOOR, TYP.

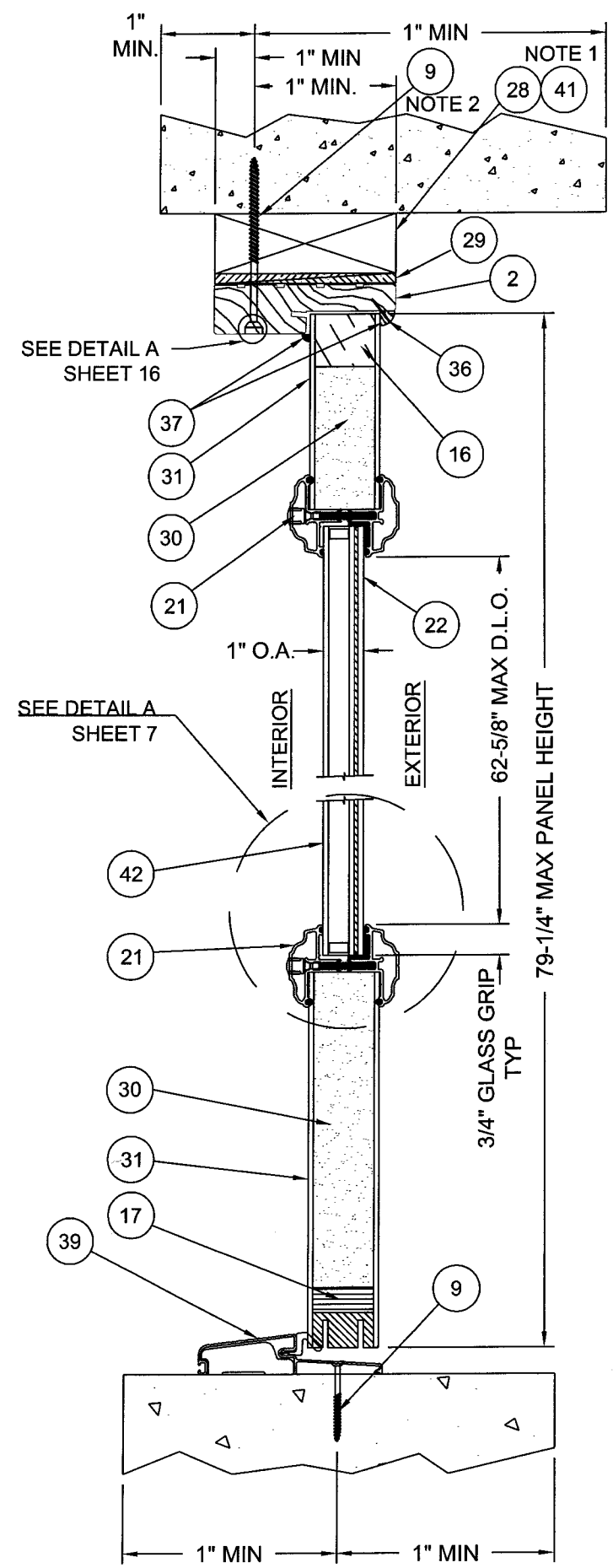

B/9 VERTICAL CROSS SECTION
FIXED SIDELIGHT, TYP.

NOTE 1: 1X MAY BE UTILIZED AS AN OPTION AS LONG AS MINIMUM ANCHOR EMBEDMENT DEPTH, INTO MASONRY, CONCRETE, OR WOOD, IS MAINTAINED.

NOTE 2: OPTIONALLY, ANCHOR CAN BE PLACED IN NARROW SECTION OF HEAD OR JAMB.

Kristina S. Daugherty
Texas P.E. No. 104390
1-5-10

JELD-WEN, INC.
3737 LAKEPORT BLVD.
KLAMATH FALLS, OR, 97601
PH. 541-882-3451

PRODUCT: FIBERLAST GLAZED IMPACT 12-0x6-8 INSWING/OUTSWING COMPOSITE DOOR

PART OR ASSEMBLY: OUTSWING VERTICAL CROSS SECTIONS MASONRY/CONCRETE

NO.	DATE	BY

REVISIONS

DATE: 12/09/09
SCALE: 3/8" = 1'
DWG. BY: GL
CHK. BY: S. FREY
DRAWING NO.: JW132009
SHEET 9 OF 18

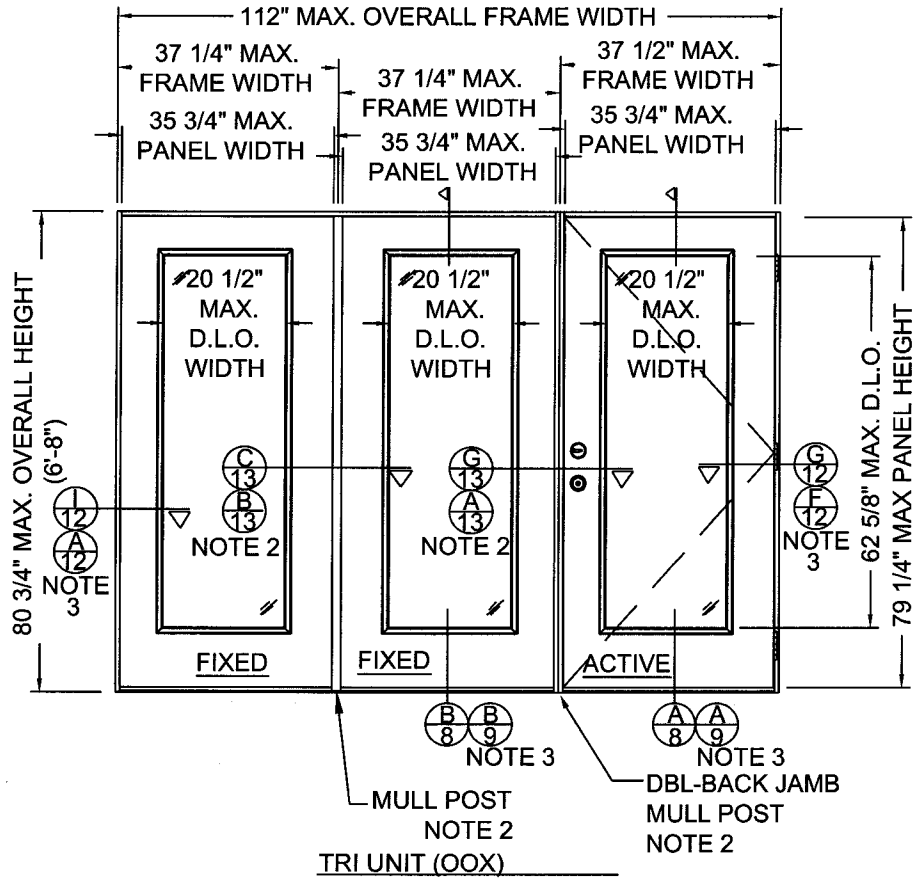

TRI UNIT (OOX)
SCALE: 3/8" =1'-0"

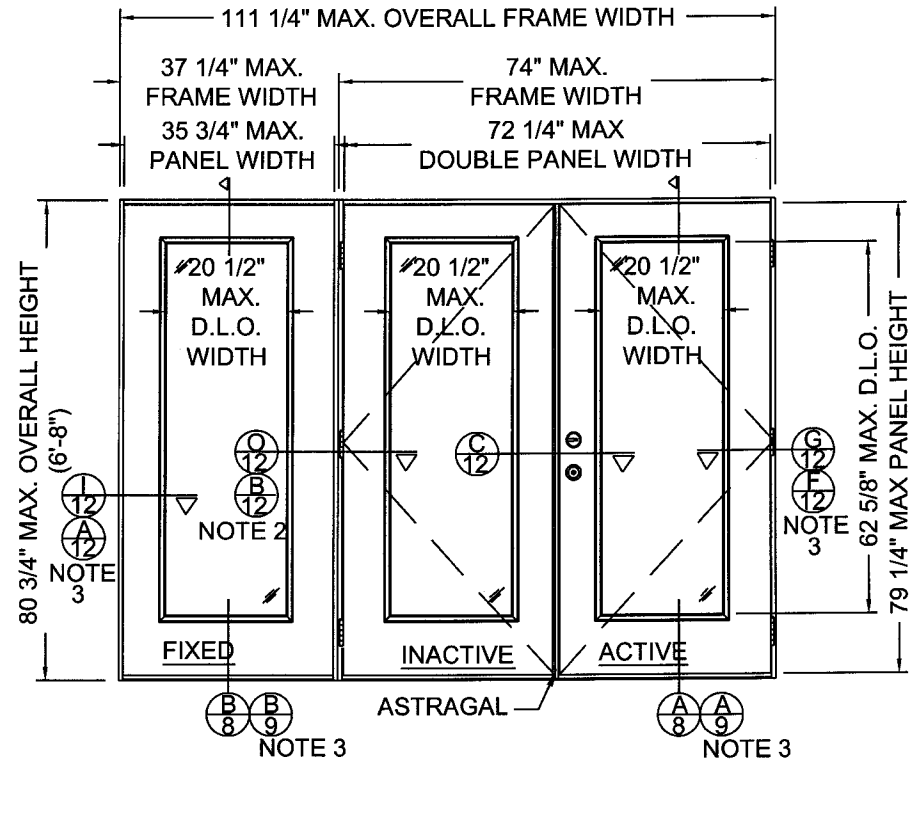

TRI UNIT (OXX)
SCALE: 3/8" =1'-0"

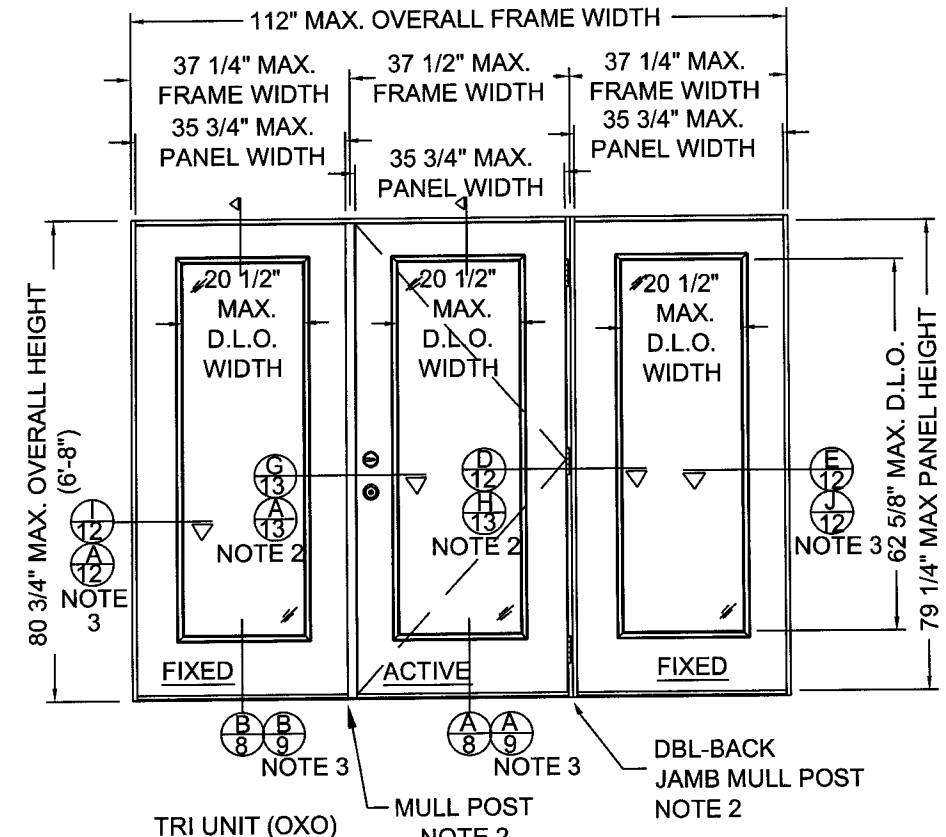

TRI UNIT (OXO)
SCALE: 3/8" =1'-0"

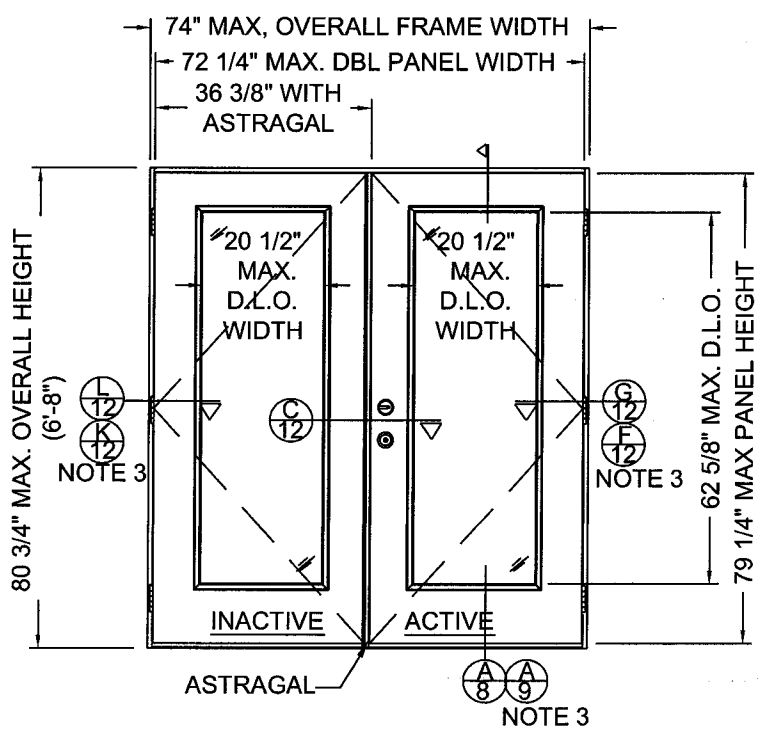

DOUBLE UNIT (XX)
SCALE: 3/8" =1'-0"

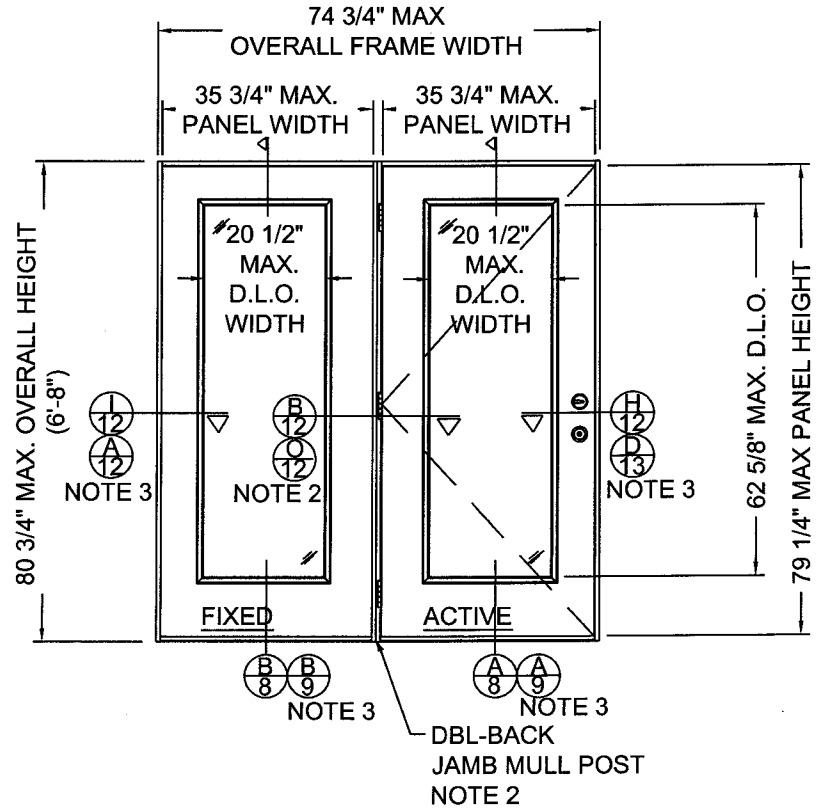

DOUBLE UNIT (OX)
SCALE: 3/8" =1'-0"

NOTE:
1- ALL VIEWS FROM EXTERIOR.
2- MULL POSTS & DOUBLE BACK JAMBS ARE INTERCHANGEABLE.
3- MASONRY AND CONCRETE CONSTRUCTION.

JELD-WEN, INC.
3737 LAKEPORT BLVD.
KLAMATH FALLS, OR, 97601
PH. 541-882-3451

PRODUCT: FIBERLAST GLAZED IMPACT 12-0x6-8 INSWING/OUTSWING COMPOSITE DOOR

PART OR ASSEMBLY: OUTSWING ELEVATIONS

NO.	DATE	BY

REVISIONS

1-5-10
Kristina S. Daugherty
Texas P.E. No. 104390

DATE: 12/09/09
SCALE: 3/8" = 1'
DWG. BY: GL
CHK. BY: S. FREY
DRAWING NO.: JW132009
SHEET 10 OF 18

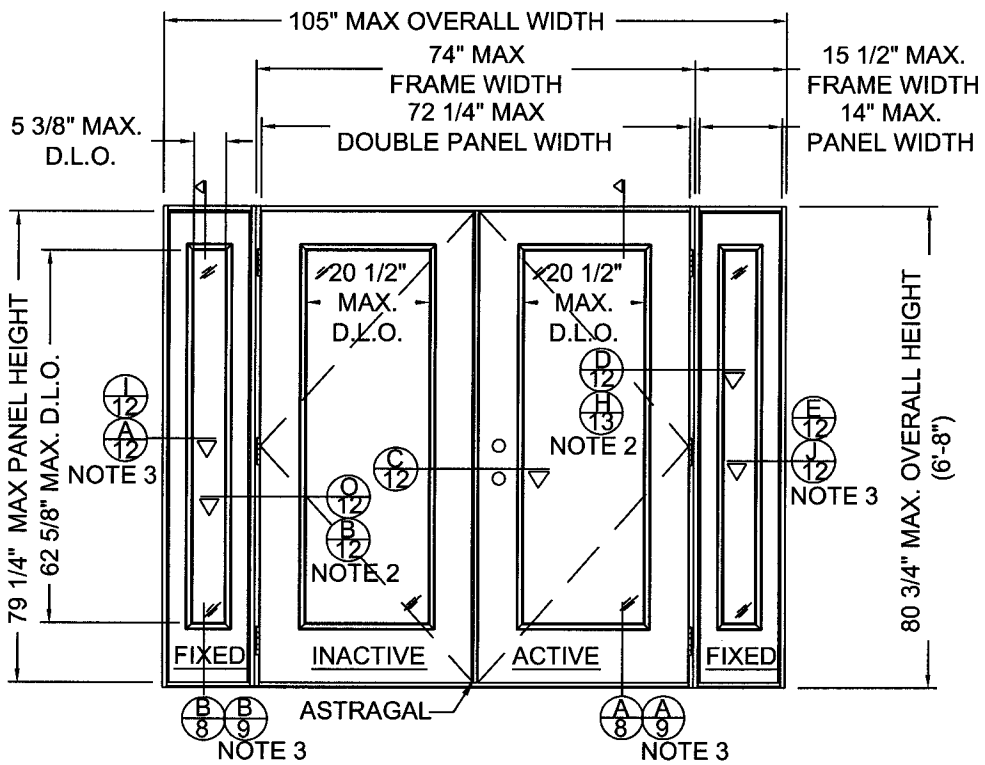

QUAD UNIT (OXXO)
SCALE: 3/8" =1'-0"

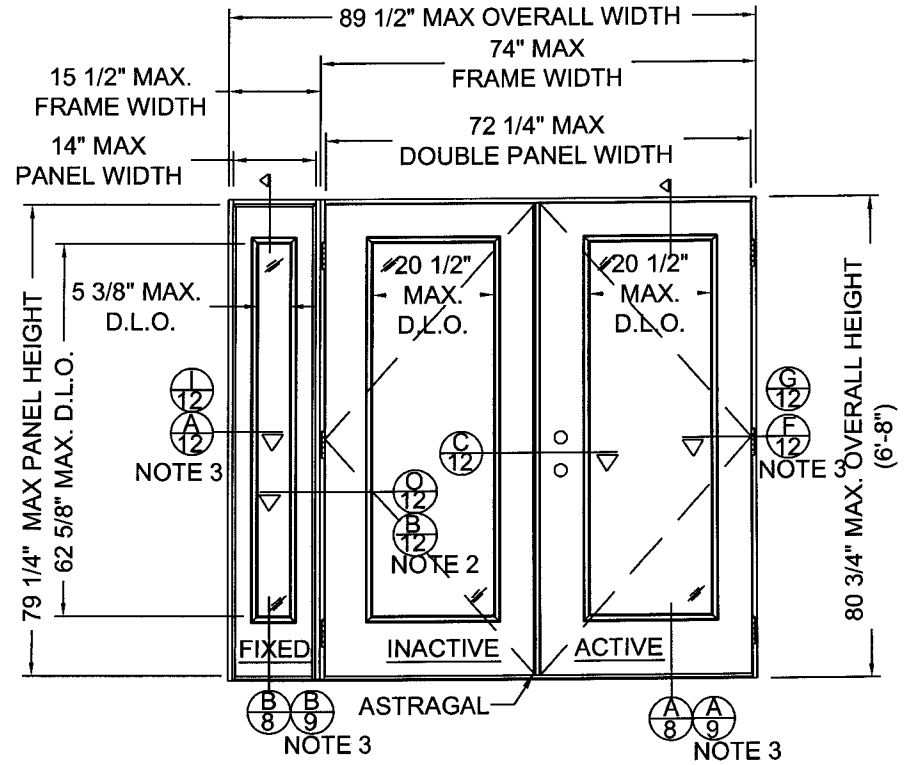

TRI UNIT (OXX)
SCALE: 3/8" =1'-0"

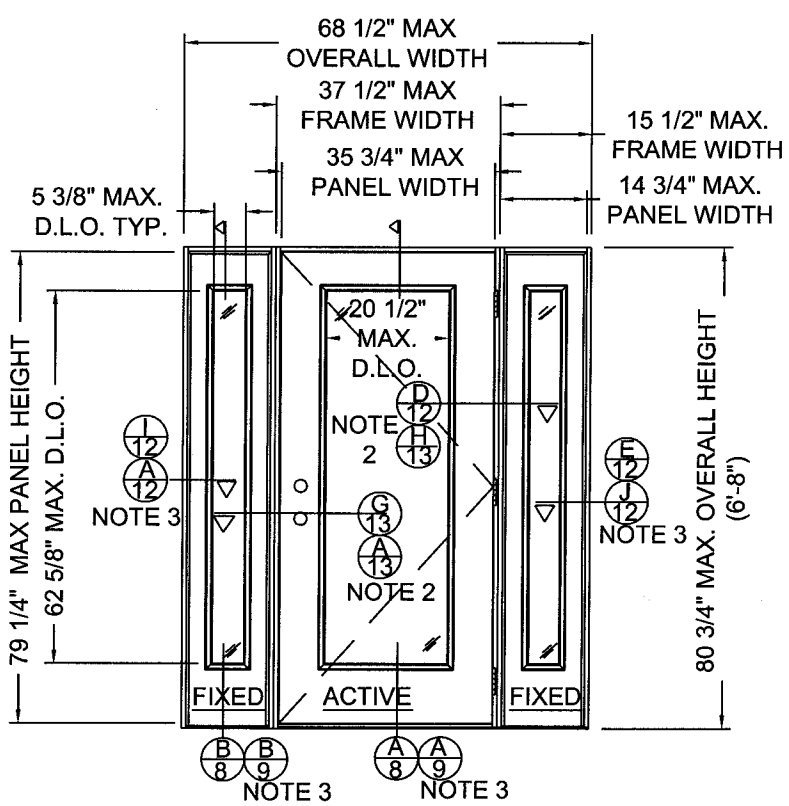

TRI UNIT (OXO)
SCALE: 3/8" =1'-0"

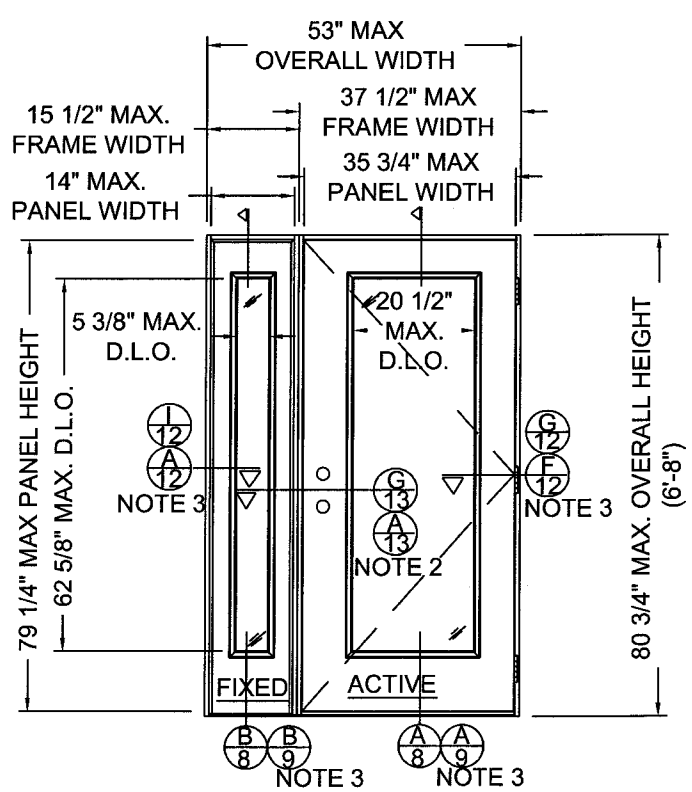

DOUBLE UNIT (OX)
SCALE: 3/8" =1'-0"

NOTE:
1- ALL VIEWS FROM EXTERIOR.
2- MULL POSTS & DOUBLE BACK JAMBS ARE INTERCHANGEABLE.
3- MASONRY AND CONCRETE CONSTRUCTION.

1-5-10
Kristina S. Daugherty
Texas P.E. No. 104390

JELD-WEN, INC.
3737 LAKEPORT BLVD.
KLAMATH FALLS, OR, 97601
PH. 541-882-3451

PRODUCT: FIBERLAST GLAZED IMPACT 12-0x6-8 INSWING/OUTSWING COMPOSITE DOOR
PART OR ASSEMBLY: OUTSWING ELEVATIONS

NO.	DATE	BY

REVISIONS

DATE: 12/09/09
SCALE: 3/8" = 1'
DWG. BY: GL
CHK. BY: S. FREY
DRAWING NO.: JW132009
SHEET 11 OF 18

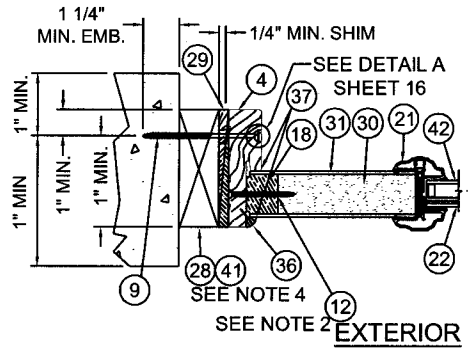

A / 12 HORIZONTAL CROSS SECTION
VIEW AT FIXED PANEL/SIDE JAMB
(MASONRY AND CONCRETE INSTALL)

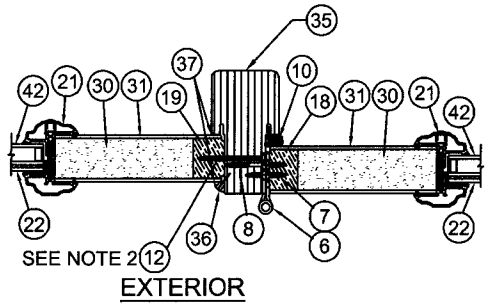

B / 12 HORIZONTAL CROSS SECTION
VIEW AT SOLID MULL POST

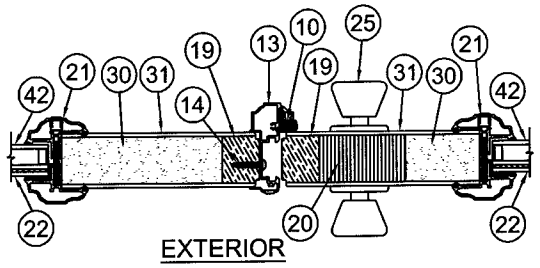

C / 12 HORIZONTAL CROSS SECTION
VIEW AT ASTRAGAL

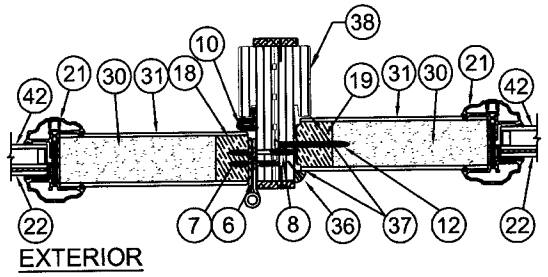

D / 12 HORIZONTAL CROSS SECTION
VIEW AT DBL JAMB

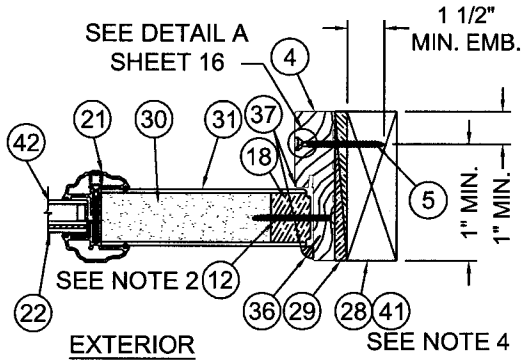

E / 12 HORIZONTAL CROSS SECTION
VIEW AT FIXED PANEL/SIDE JAMB
(WOOD INSTALL)

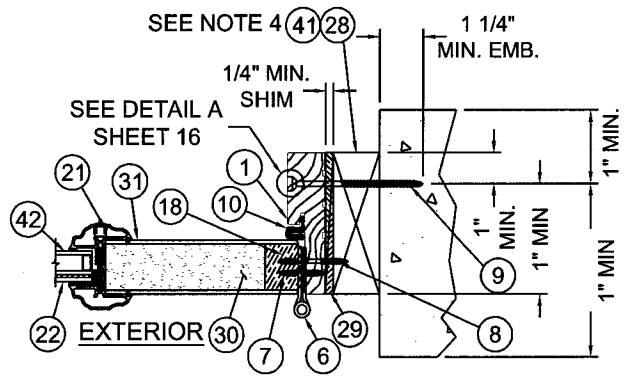

F / 12 HORIZONTAL CROSS SECTION
VIEW AT DOOR HINGE/SIDE JAMB
(MASONRY AND CONCRETE INSTALL)

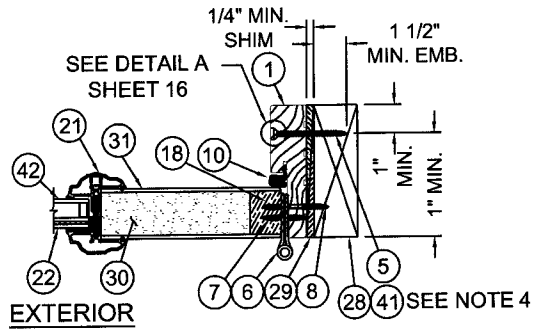

G / 12 HORIZONTAL CROSS SECTION
VIEW AT DOOR HINGE/SIDE JAMB
(WOOD INSTALL)

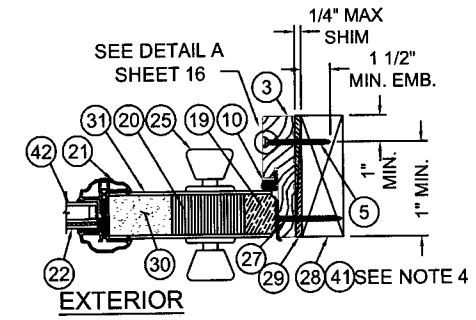

H / 12 HORIZONTAL CROSS SECTION
VIEW AT DOOR LATCH/SIDE JAMB
(WOOD INSTALL)

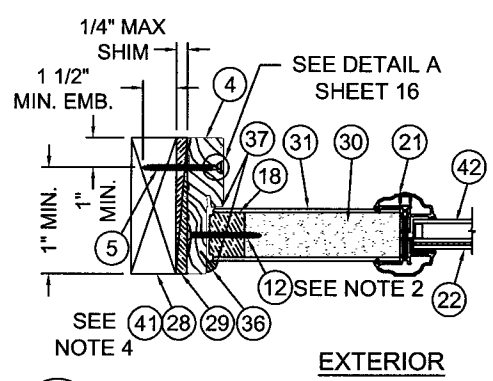

I / 12 HORIZONTAL CROSS SECTION
VIEW AT FIXED PANEL/SIDE JAMB
(WOOD INSTALL)

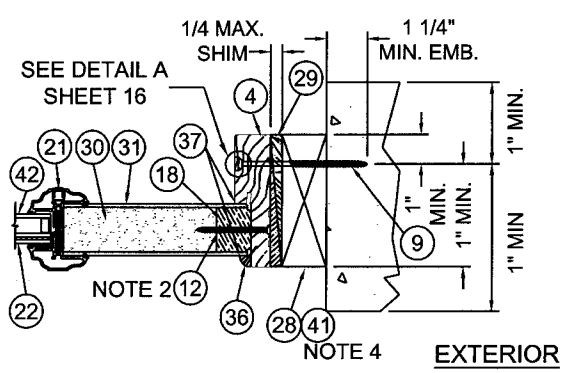

J / 12 HORIZONTAL CROSS SECTION
VIEW AT FIXED PANEL/SIDE JAMB
(MASONRY AND CONCRETE INSTALL)

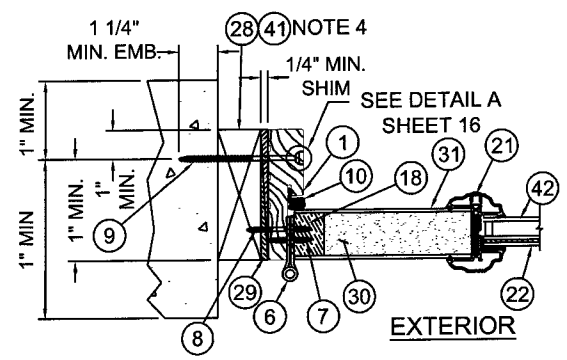

K / 12 HORIZONTAL CROSS SECTION
VIEW AT DOOR HINGE/SIDE JAMB
(MASONRY AND CONCRETE INSTALL)

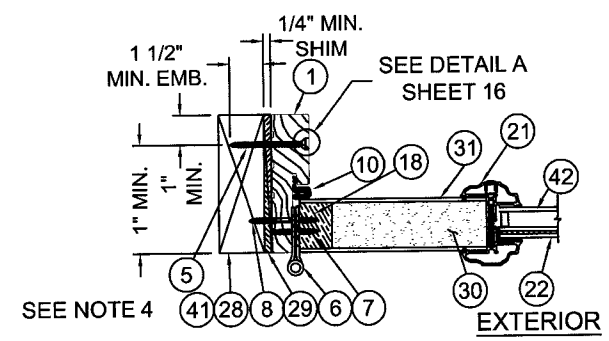

L / 12 HORIZONTAL CROSS SECTION
VIEW AT DOOR HINGE/SIDE JAMB
(WOOD INSTALL)

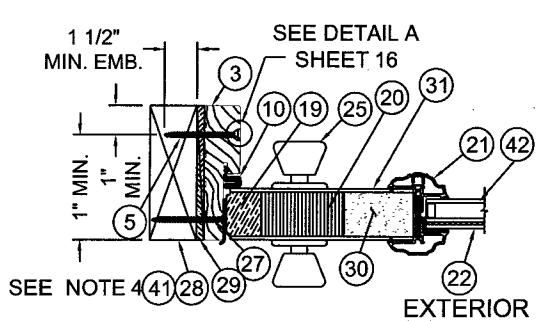

M / 12 HORIZONTAL CROSS SECTION
VIEW AT DOOR LATCH/SIDE JAMB
(WOOD INSTALL)

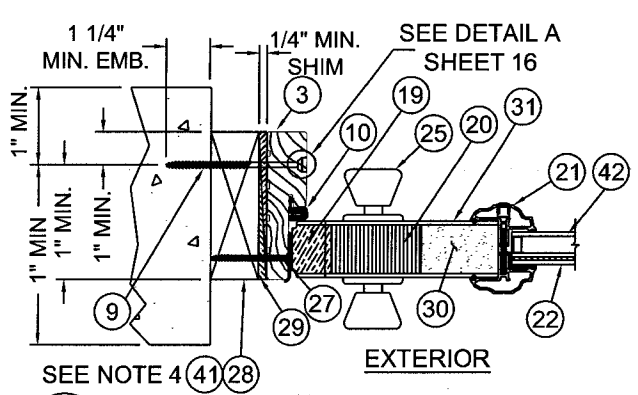

N / 12 HORIZONTAL CROSS SECTION
VIEW AT DOOR LATCH/SIDE JAMB
(MASONRY AND CONCRETE INSTALL)

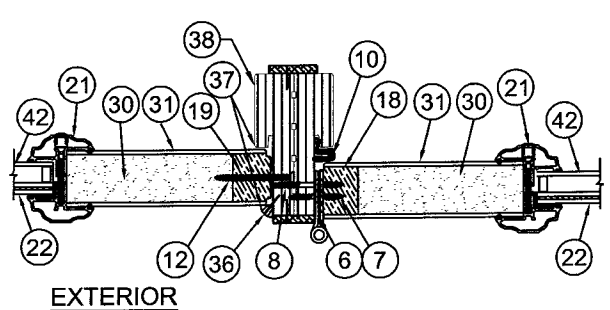

O / 12 HORIZONTAL CROSS SECTION
VIEW AT DBL JAMB POST

NOTES:
1. FOR ANCHOR SPACING, SEE SHEETS 14, 15, 16 & 17.
2. SPACING FOR ITEM #12 FROM TOP DOWN: 6"-28 $\frac{5}{8}$"-50$\frac{7}{8}$"-73$\frac{1}{4}$".
3. ASTRAGAL SCREW PATTERN SPACING FOR ITEM #13 FROM TOP DOWN: 1/2", 2", 3 1/2", 20", 24 3/4", 39".
4. 1X MAY BE UTILIZED AS AN OPTION AS LONG AS MINIMUM ANCHOR EMBEDMENT DEPTH, INTO MASONRY, CONCRETE, OR WOOD, IS MAINTAINED.
5. TAPCON (ITEM #9) SPACING BETWEEN ANCHORS SAME AS WOOD SCREW CONFIGURATION.
6. OPTIONALLY, ANCHOR CAN BE PLACED IN NARROW SECTION OF HEAD OR JAMB.

Kristina S. Daugherty
Texas P.E. No. 104390
1-5-09

JELD-WEN, INC.
3737 LAKEPORT BLVD.
KLAMATH FALLS, OR, 97601
PH. 541-882-3451

PRODUCT: FIBERLAST GLAZED IMPACT 12-0x6-8 INSWING/OUTSWING COMPOSITE DOOR
PART OR ASSEMBLY: OUTSWING HORIZONTAL CROSS SECTIONS

NO.	DATE	BY

REVISIONS

DATE: 2/09/09
SCALE: 3"=1'
DWG. BY: GL
CHK. BY: S. FREY
DRAWING NO.: JW132009
SHEET 12 OF 18

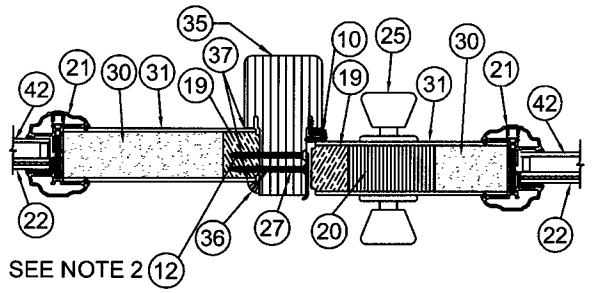

EXTERIOR

A / 13 HORIZONTAL CROSS SECTION
VIEW AT SOLID MULL POST

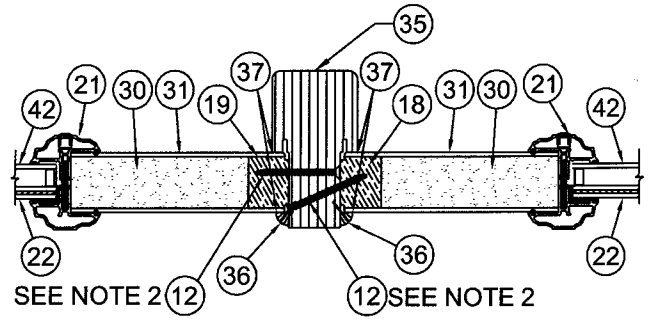

EXTERIOR

B / 13 HORIZONTAL CROSS SECTION
VIEW AT SOLID MULL POST

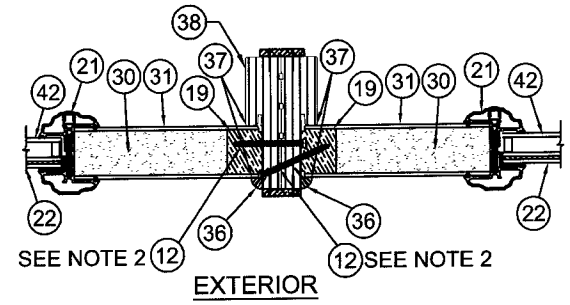

EXTERIOR

C / 13 HORIZONTAL CROSS SECTION
VIEW AT DBL BACK JAMB

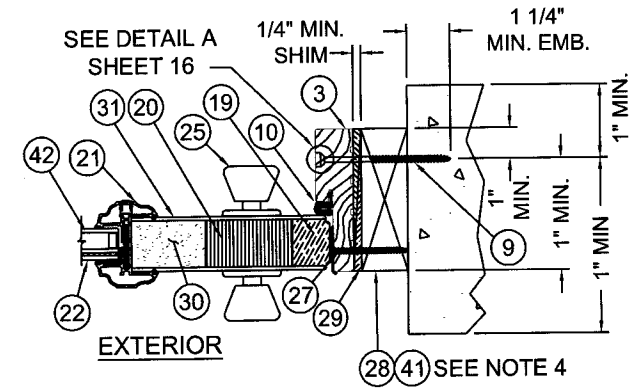

EXTERIOR

D / 13 HORIZONTAL CROSS SECTION
VIEW AT DOOR LATCH/SIDE JAMB
(MASONRY AND CONCRETE INSTALL)

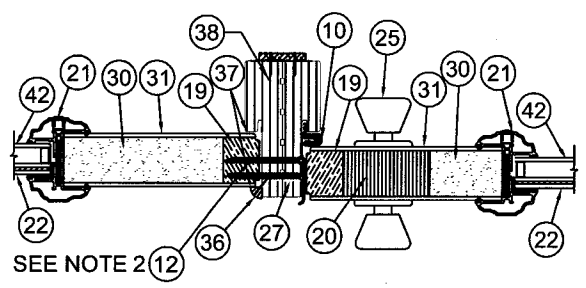

EXTERIOR

G / 13 HORIZONTAL CROSS SECTION
VIEW AT DBL BACK JAMB

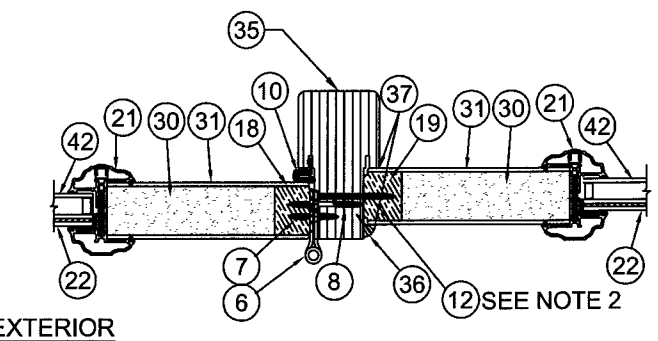

EXTERIOR

H / 13 HORIZONTAL CROSS SECTION
VIEW AT SOLID MULL POST

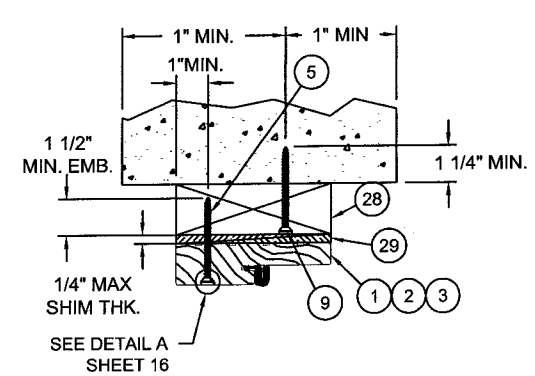

OPTIONAL MASONRY AND CONCRETE INSTALLATION
FOR HEADERS AND JAMBS
SEE NOTE 5, THIS PAGE

NOTES:
1. FOR ANCHOR SPACING, SEE SHEETS 14, 15, 16 & 17.
2. SPACING FOR ITEM #12 FROM TOP DOWN: 6"-28 $\frac{5}{8}$"-50$\frac{7}{8}$"-73$\frac{1}{4}$".
3. ASTRAGAL SCREW PATTERN SPACING FOR ITEM #13 FROM TOP DOWN: 1/2", 2", 3 1/2", 20", 24 3/4", 39".
4. 1X MAY BE UTILIZED AS AN OPTION AS LONG AS MINIMUM ANCHOR EMBEDMENT DEPTH, INTO MASONRY, CONCRETE, OR WOOD, IS MAINTAINED.
5. TAPCON (ITEM #9) SPACING BETWEEN ANCHORS SAME AS WOOD SCREW CONFIGURATION.
6. OPTIONALLY, ANCHOR CAN BE PLACED IN NARROW SECTION OF HEAD OR JAMB.

JELD-WEN, INC.
3737 LAKEPORT BLVD.
KLAMATH FALLS, OR, 97601
PH. 541-882-3451

PRODUCT: FIBERLAST GLAZED 12-0x6-8 COMPOSITE DOOR

PART OR ASSEMBLY: OUTSWING HORIZONTAL CROSS SECTIONS

NO.	DATE	REVISIONS	BY

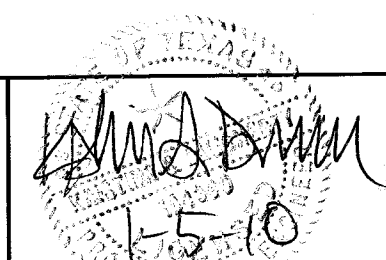

Kristina S. Daugherty
Texas P.E. No. 104390

DATE: 12/09/09
SCALE: 3"=1'
DWG. BY: GL
CHK. BY: S. FREY
DRAWING NO.: JW132009
SHEET 13 OF 18

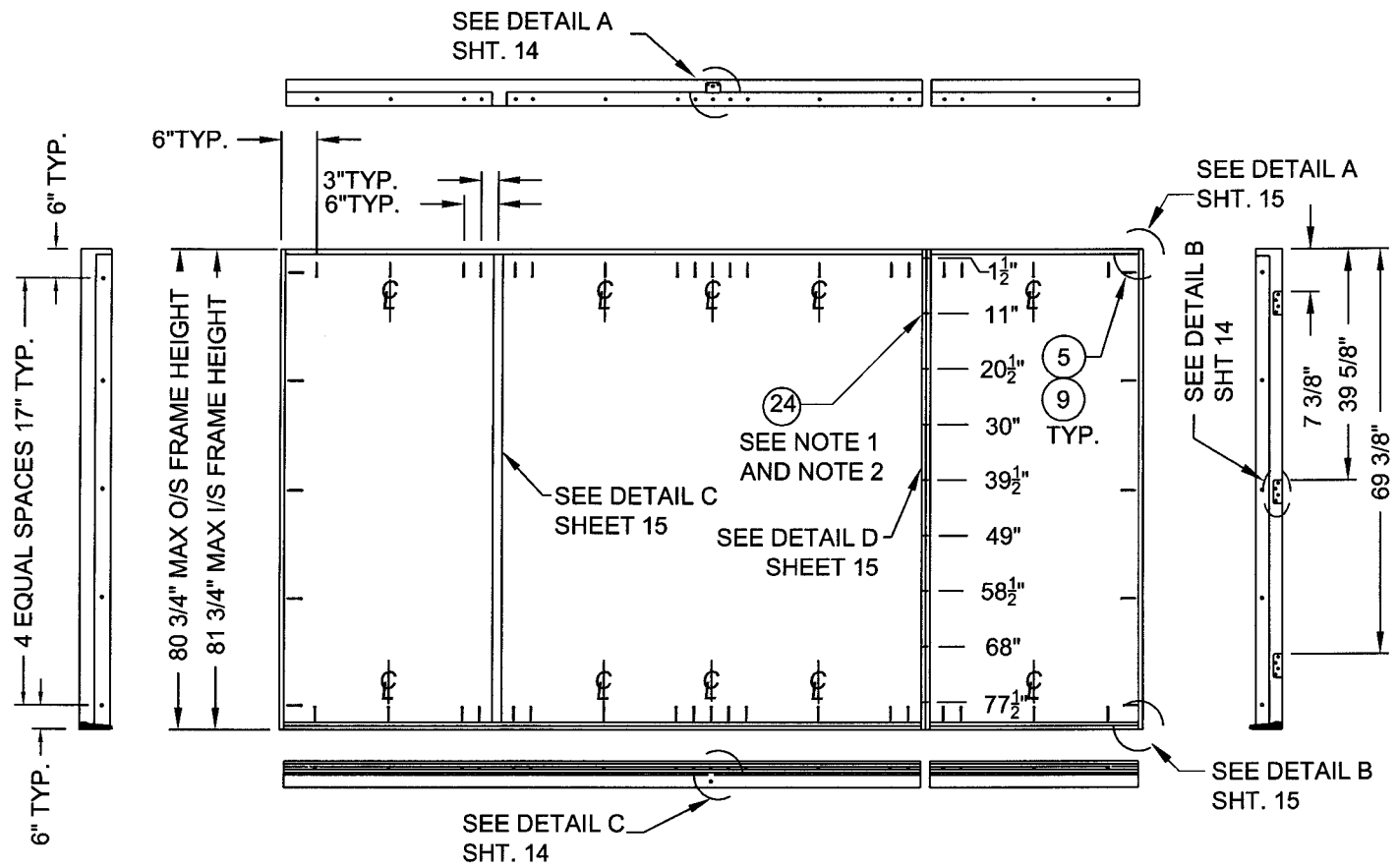

ANCHORING LOCATIONS DOUBLE
INSWING/OUTSWING UNIT W/ 2 SIDELITE (OXXO) DETAIL A

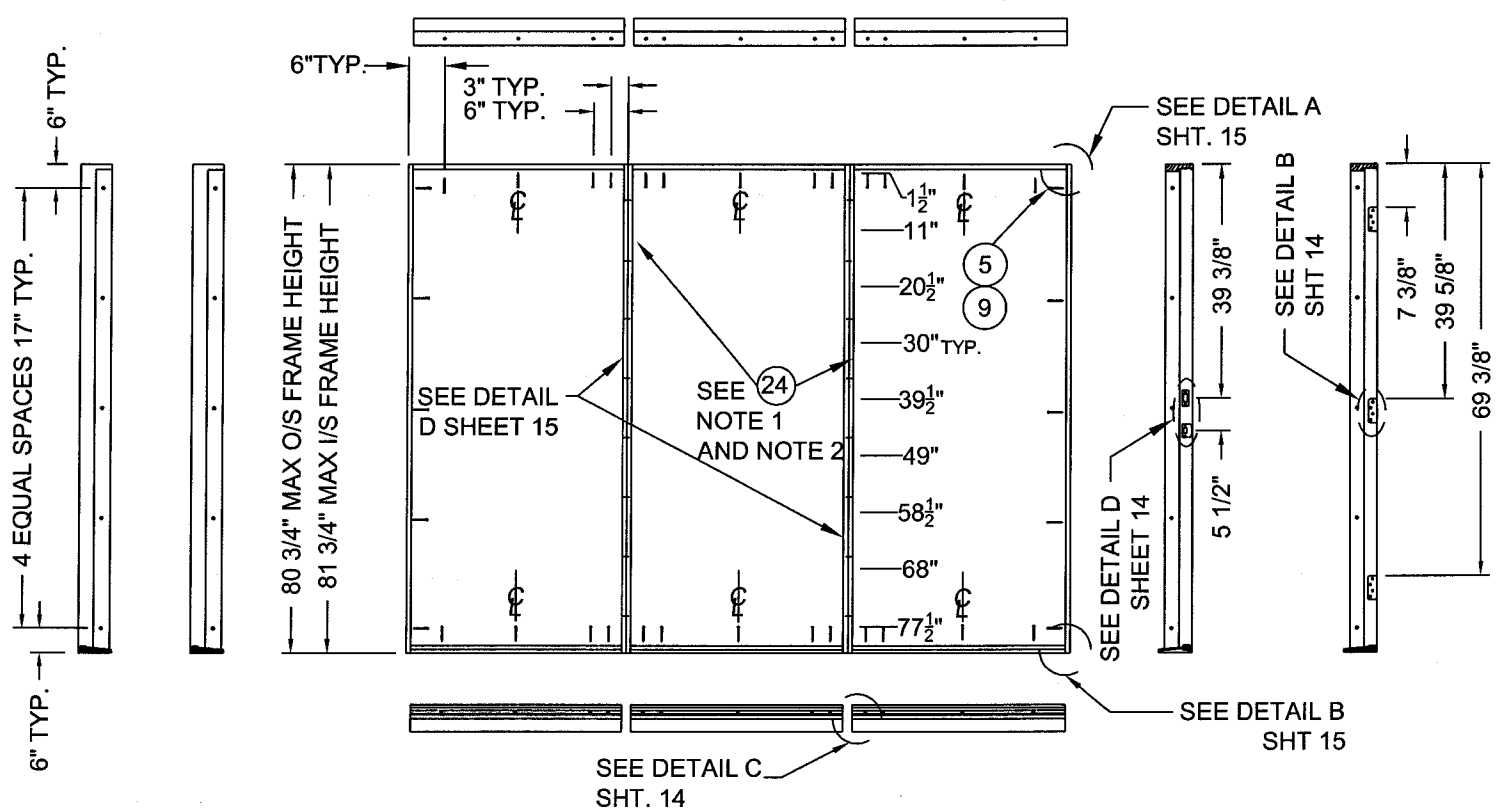

ANCHORING LOCATIONS SINGLE
INSWING/OUTSWING UNIT W/ 2 SIDELITE (OOX)

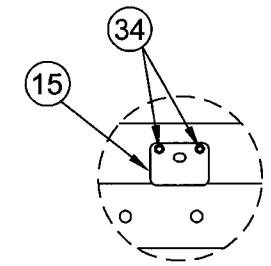

DETAIL A
UPPER SURFACE BOLT STRIKE PLATE
AND UPPER ASTRAGAL BOLT STRIKE

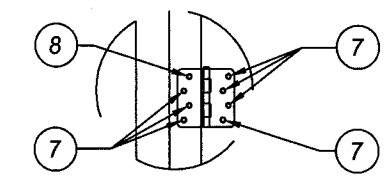

DETAIL B
HINGE DETAIL

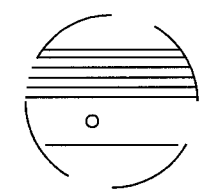

DETAIL C (INSWING)
LOWER SURFACE BOLT STRIKE PLATE
AND LOWER ASTRAGAL BOLT STRIKE

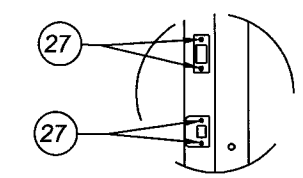

DETAIL D
LATCH & DEADBOLT STRIKE
PLATES

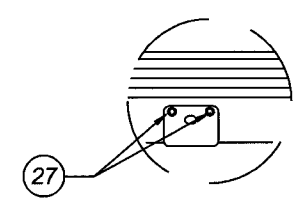

DETAIL C (OUTSWING)
LOWER SURFACE BOLT STRIKE PLATE
AND LOWER ASTRAGAL BOLT STRIKE

NOTES:
1. CORRUGATED STAPLES TO BE APPLIED ON BOTH INTERIOR AND EXTERIOR SURFACES AT SPACING SHOWN ON 0XX0 MODEL (SEE SHEET 14) +/-1", FOR TOTAL OF NINE FASTENERS PER SIDE.
2. CORRUGATED NAILS ARE UTILIZED ON DOUBLE BACK JAMBS ONLY. OMIT NAILS ON SOLID MULL POST CONFIGURATIONS.
3. ANCHOR SPACING FOR BOTH INSWING & OUTSWING.

JELD-WEN, INC.
3737 LAKEPORT BLVD.
KLAMATH FALLS, OR, 97601
PH. 541-882-3451

PRODUCT: FIBERLAST GLAZED IMPACT 12-0x6-8 INSWING/OUTSWING COMPOSITE DOOR

PART OR ASSEMBLY: ANCHORING LOCATIONS & DETAILS

NO.	DATE	REVISIONS	BY

1-5-10
Kristina S. Daugherty
Texas P.E. No. 104390

DATE: 12/09/09
SCALE: 3/8"=1'
DWG. BY: GL
CHK. BY: S. FREY
DRAWING NO.: JW132009
SHEET 14 OF 18

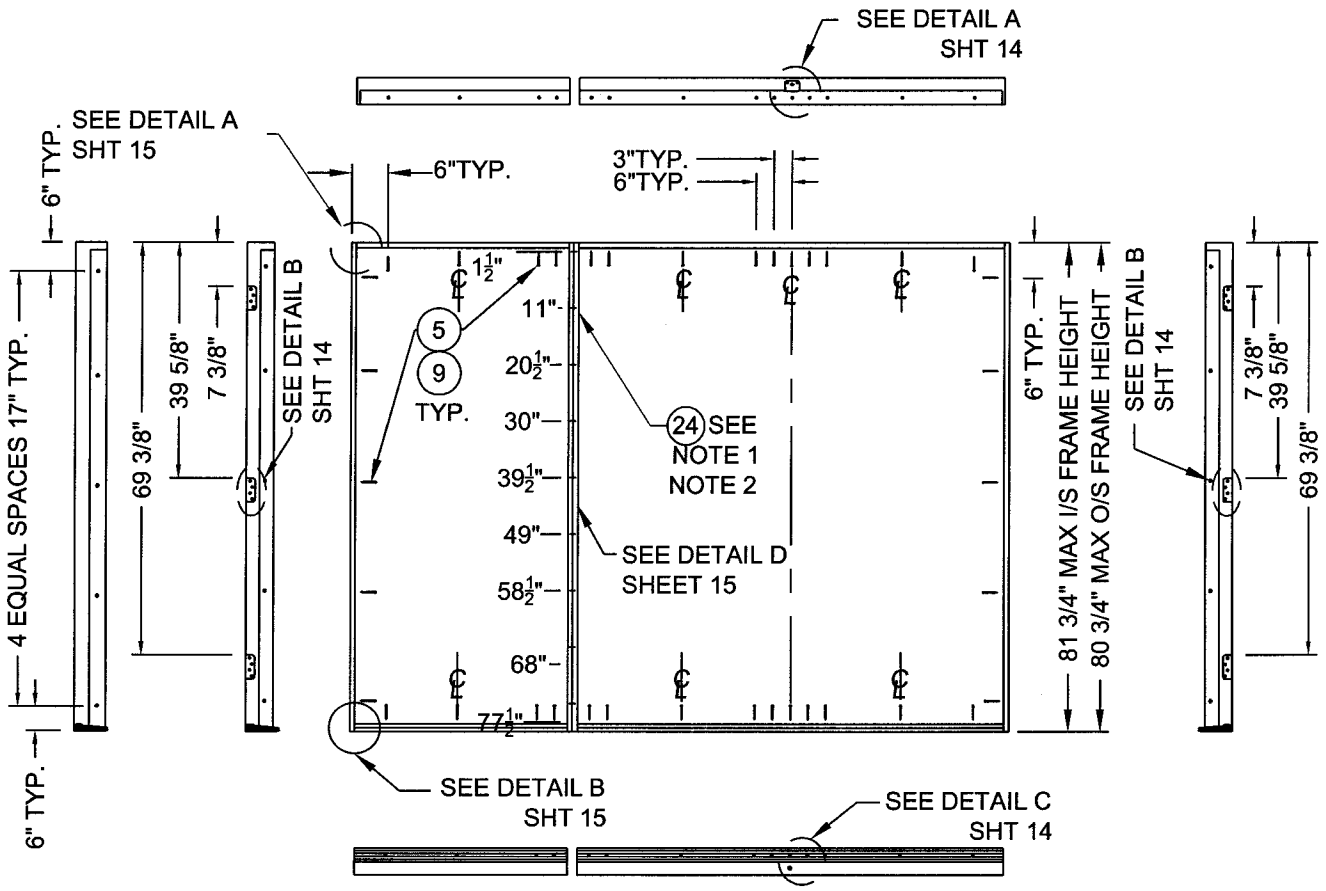

ANCHORING LOCATIONS DOUBLE
INSWING/OUTSWING UNIT W/ 1 SIDELITE (0XX)
SCALE: 1/2" =1'-0"

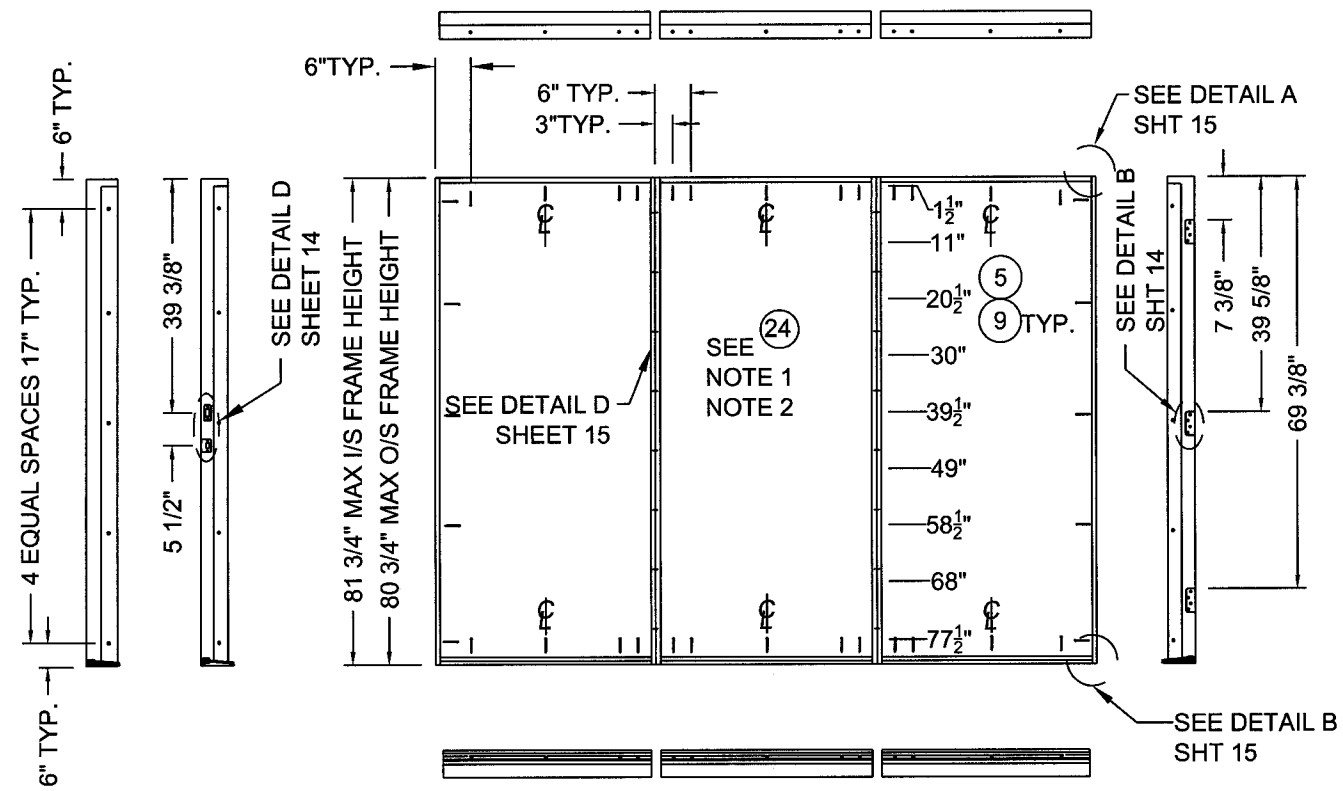

ANCHORING LOCATIONS SINGLER
INSWING/OUTSWING UNIT W/ 2 SIDELITE (0X0)
SCALE: 1/2" =1'-0"

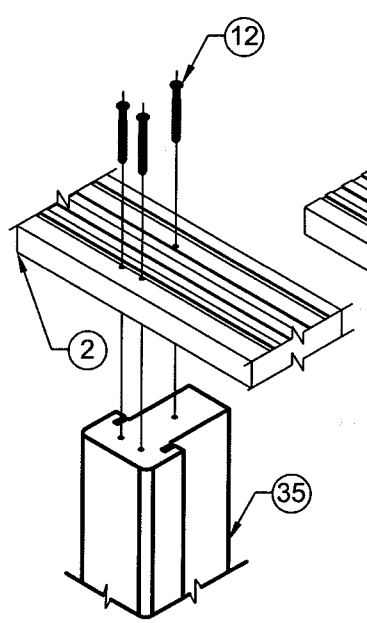

DETAIL C - MULL POST
SCALE: 3" =1'-0"

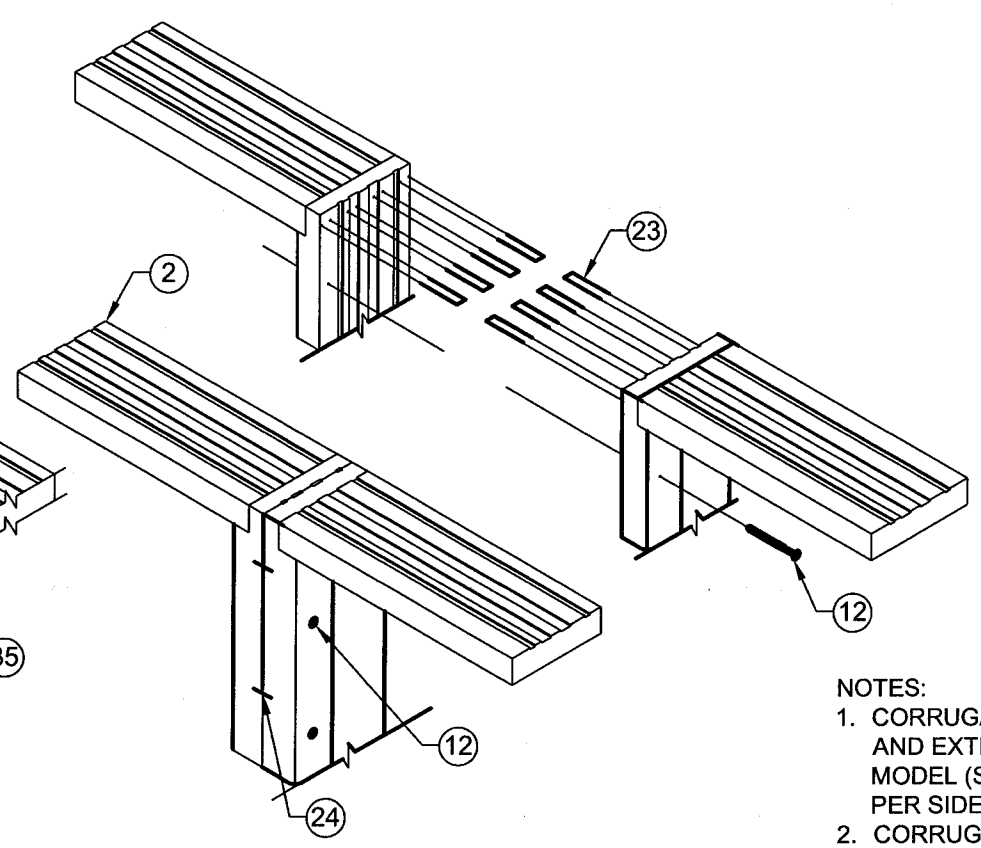

DETAIL D - DOUBLE JAMB
SCALE: 3" =1'-0"

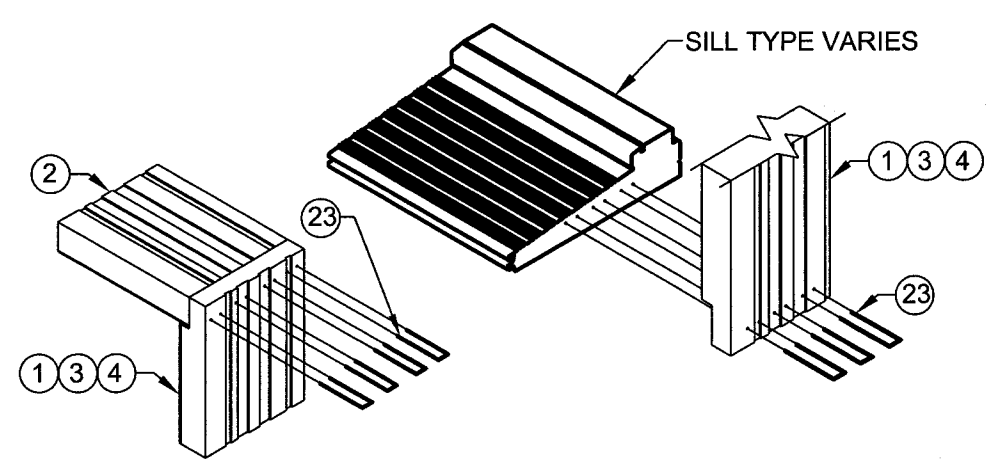

DETAIL A
SCALE: 3" =1'-0"

DETAIL B
SCALE: 3" =1'-0"

NOTES:
1. CORRUGATED STAPLES TO BE APPLIED ON BOTH INTERIOR AND EXTERIOR SURFACES AT SPACING SHOWN ON 0XX0 MODEL (SEE SHEET 14) +/-1", FOR TOTAL OF NINE FASTENERS PER SIDE.
2. CORRUGATED NAILS ARE UTILIZED ON DOUBLE BACK JAMBS ONLY. OMIT NAILS ON SOLID MULL POST CONFIGURATIONS.
3. ANCHOR SPACING FOR BOTH INSWING & OUTSWING.

JELD-WEN, INC.
3737 LAKEPORT BLVD.
KLAMATH FALLS, OR, 97601
PH. 541-882-3451

PRODUCT: FIBERLAST GLAZED IMPACT 12-0x6-8 INSWING/OUTSWING COMPOSITE DOOR

PART OR ASSEMBLY: ANCHORING LOCATIONS & DETAILS

NO.	DATE	REVISIONS	BY

Kristina S. Daugherty
Texas P.E. No. 104390
1-5-10

DATE: 12/09/09
SCALE: AS NOTED
DWG. BY: GL
CHK. BY: S. FREY
DRAWING NO.: JW132009
SHEET 15 OF 18

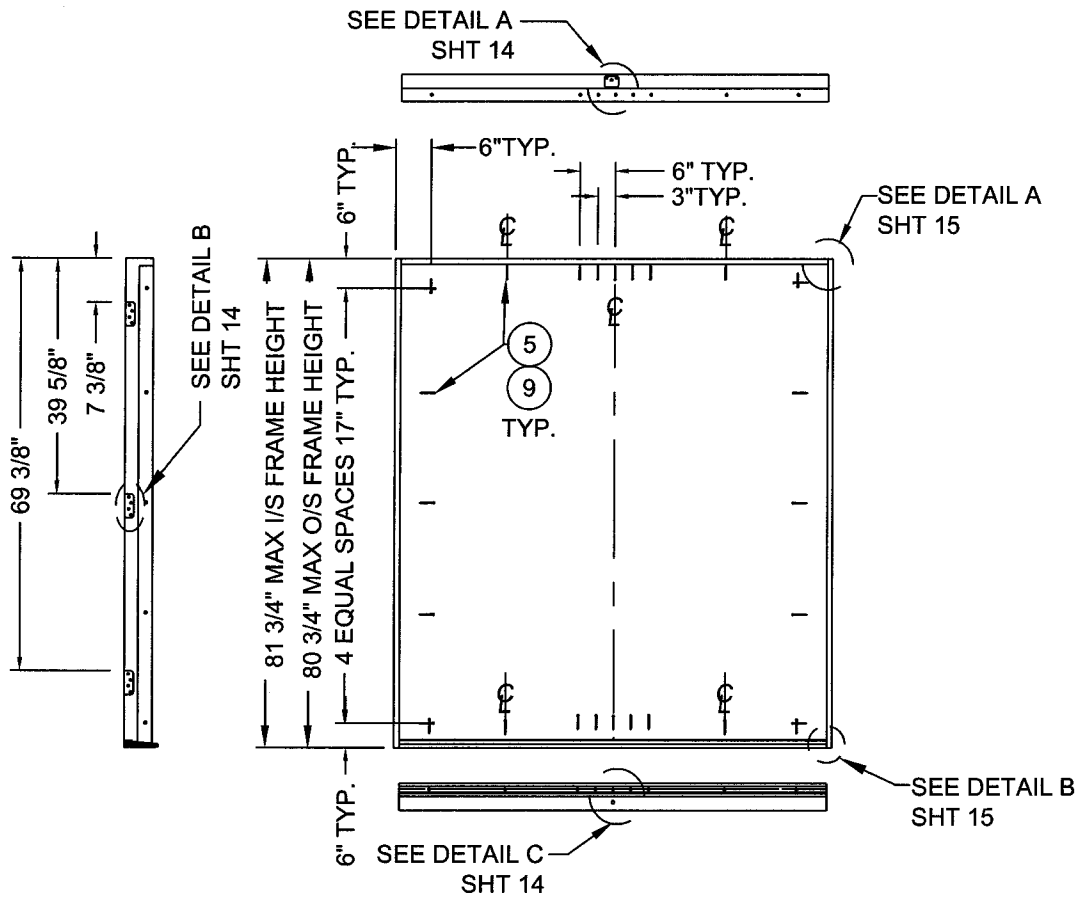

ANCHORING LOCATIONS
DOUBLE INSWING/OUTSWING UNIT (XX)
SCALE: 3/8" =1'-0"

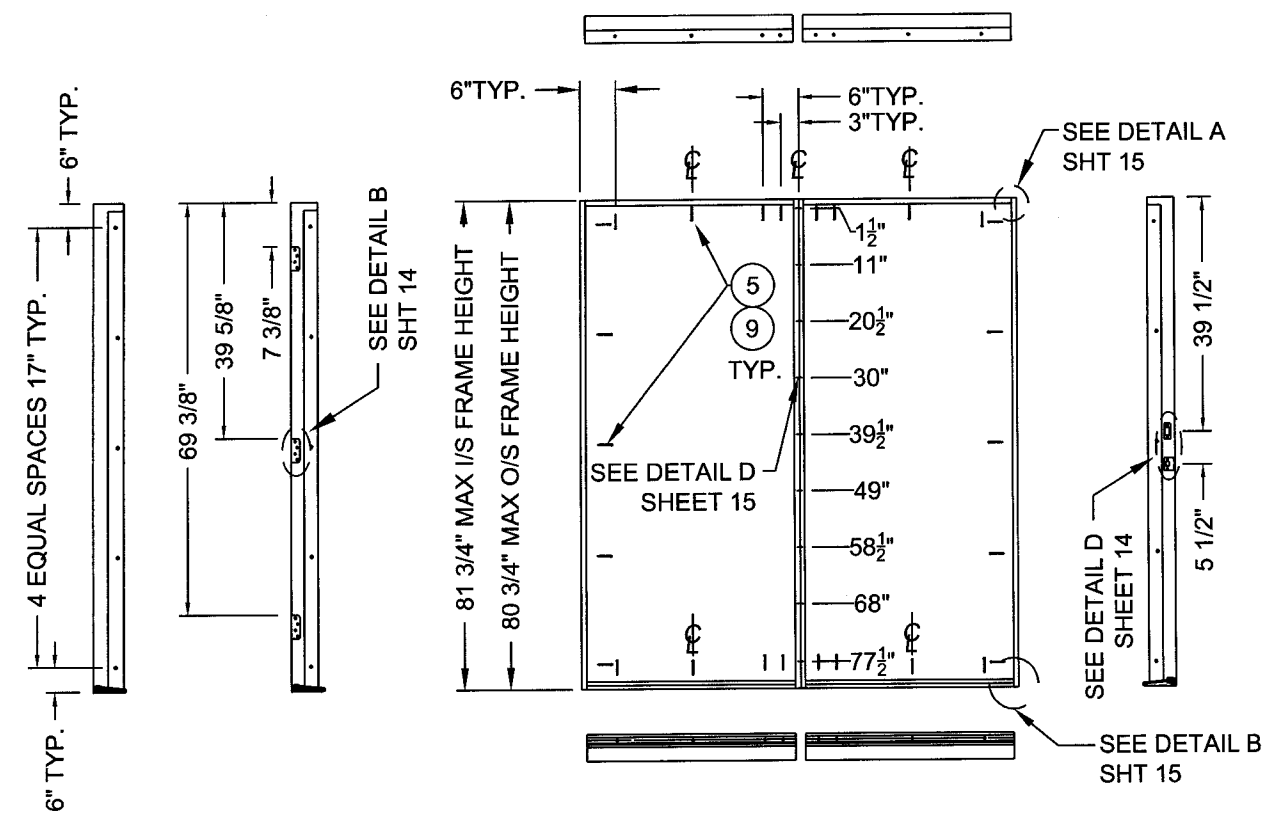

ANCHORING LOCATIONS
SINGLE INSWING/OUTSWING UNIT W/ 1 SIDELITE (OX)
SCALE: 3/8" =1'-0"

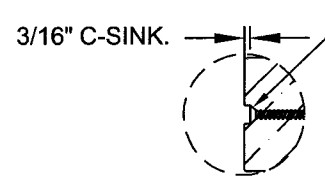

DETAIL - A
SCALE: 1/4" =1'-0"

NOTE
1 - USE #10 WOOD INSTALLATION SCREW W/ 1.50" MIN. EMBEDMENT WHEN INSTALLING INTO WOOD SUBSTRATE AT HEAD & JAMBS.
2 - USE #8 x 2 1/2" PFH WOOD SCREW WHEN INSTALLING INTO MULLIONS.
3 - USE 3/16" ITW TAPCON ANCHOR W/ 1 1/4" MIN. EMBED. WHEN INSTALLING INTO CONCRETE/MASONRY SUBSTRATE AT SIDELITE SILLS.
4 - SCREW AND TAPCON ANCHORS CAN BE EMBEDED IN EITHER THE 1 1/4" OR 3/4" THICK PORTION OF THE JAMB AS LONG AS THE SUBSTRATE EMBEDMENT IS MAINTAINED.

NOTES:
1. CORRUGATED STAPLES TO BE APPLIED ON BOTH INTERIOR AND EXTERIOR SURFACES AT SPACING SHOWN ON 0XX0 MODEL (SEE SHEET 14) +/-1", FOR TOTAL OF NINE FASTENERS PER SIDE.
2. CORRUGATED NAILS ARE UTILIZED ON DOUBLE BACK JAMBS ONLY. OMIT NAILS ON SOLID MULL POST CONFIGURATIONS.
3. ANCHOR SPACING FOR BOTH INSWING & OUTSWING.

Kristina S. Daugherty
Texas P.E. No. 104390

JELD-WEN, INC.
3737 LAKEPORT BLVD.
KLAMATH FALLS, OR, 97601
PH. 541-882-3451

PRODUCT: FIBERLAST GLAZED IMPACT 12-0x6-8 INSWING/OUTSWING COMPOSITE DOOR

PART OR ASSEMBLY: ANCHORING LOCATIONS & DETAILS

NO.	DATE	BY

REVISIONS

DATE: 12/08/09
SCALE: AS NOTED
DWG. BY: GL
CHK. BY: S. FREY
DRAWING NO.: JW132009
SHEET 16 OF 18

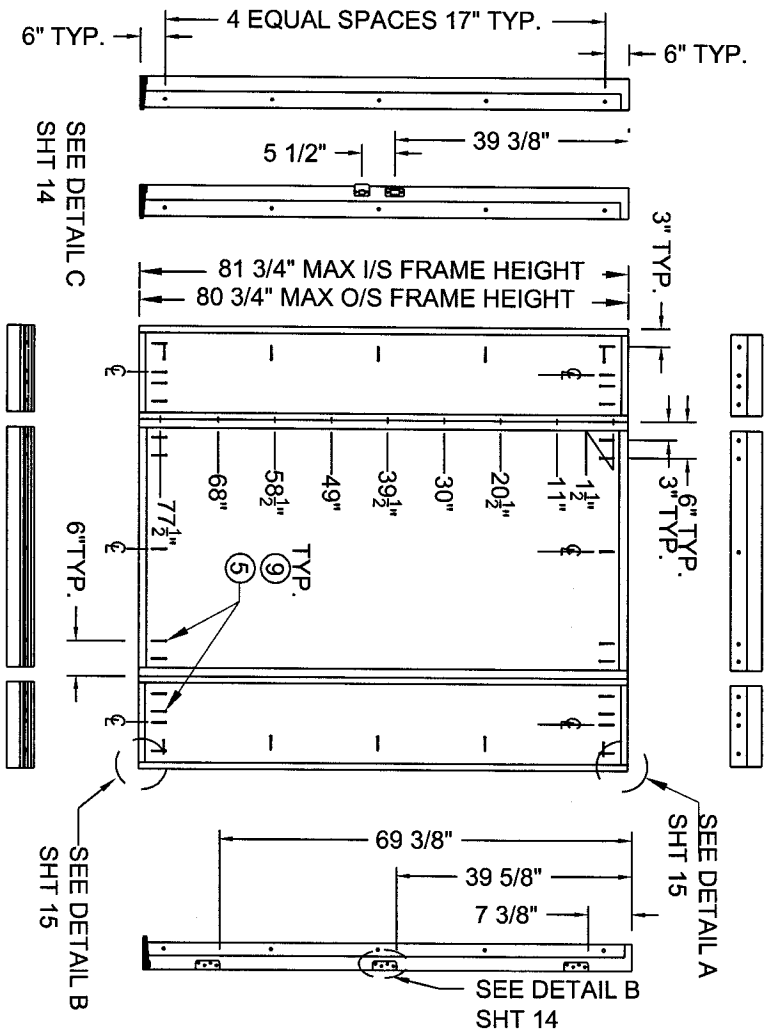

ANCHORING LOCATIONS SINGLE
INSWING/OUTSWING UNIT W/ 2 SIDELITE (0X0)

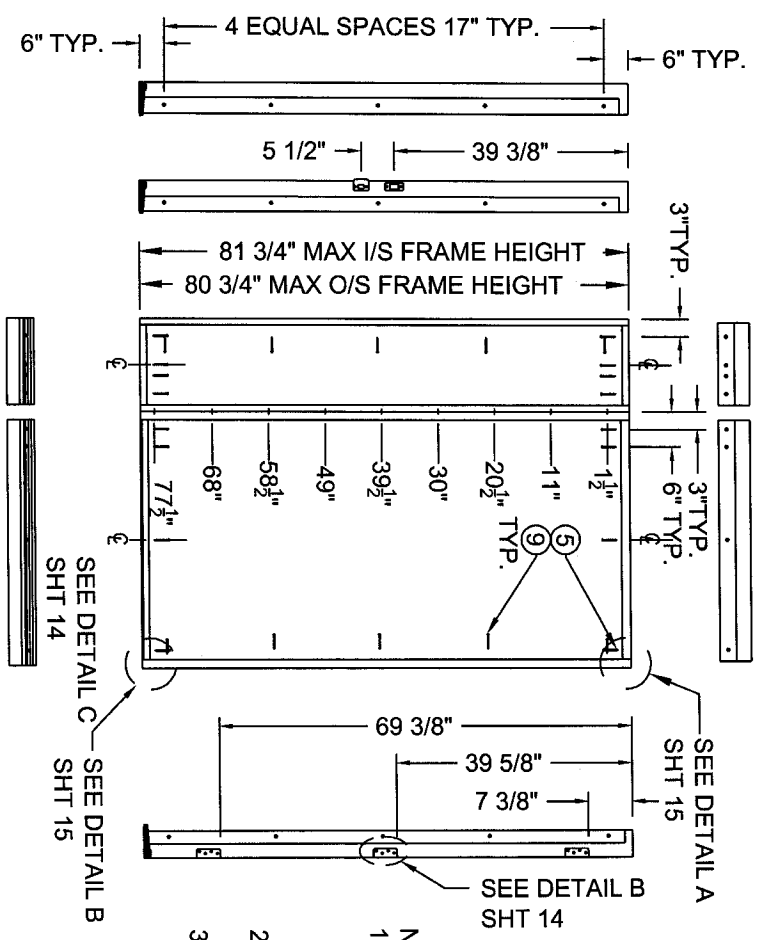

ANCHORING LOCATIONS SINGLE
INSWING/OUTSWING UNIT W/ 1 SIDELITE (OX) OR (XO)

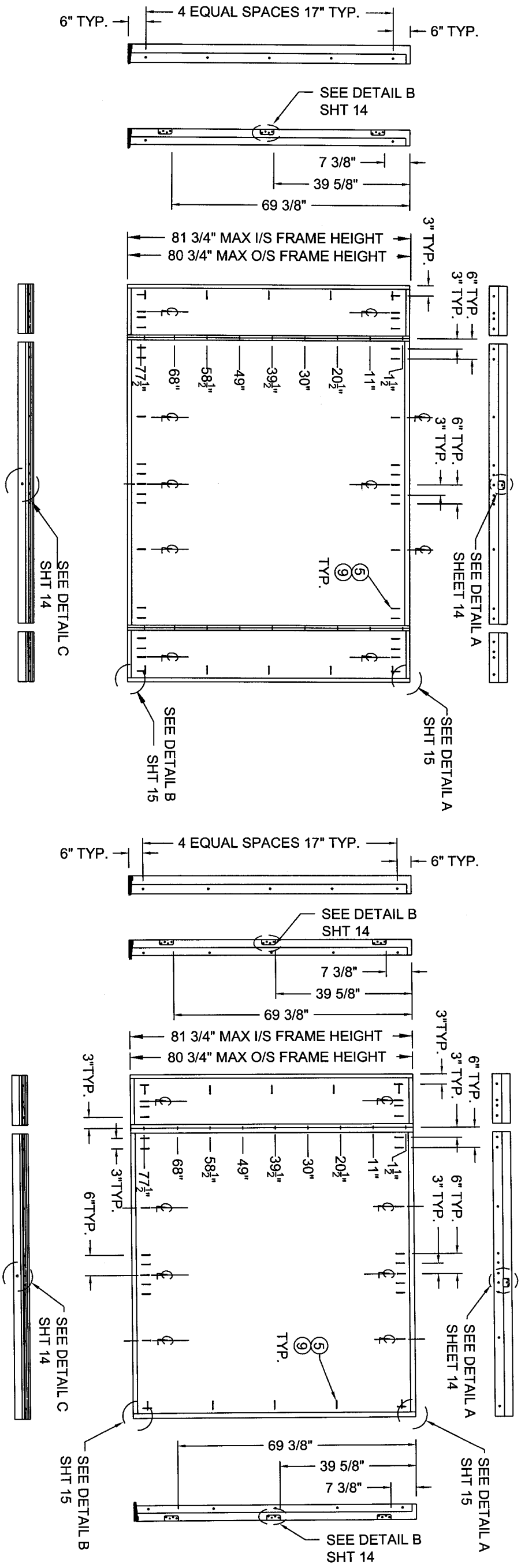

ANCHORING LOCATIONS DOUBLE
INSWING/OUTSWING UNIT W/ 2 SIDELITE (OXXO)

ANCHORING LOCATIONS DOUBLE
INSWING/OUTSWING UNIT W/ 1 SIDELITE (0XX)

NOTES:

1. CORRUGATED STAPLES TO BE APPLIED ON BOTH INTERIOR AND EXTERIOR SURFACES AT SPACING SHOWN ON 0XX0 MODEL (SEE SHEET 14) +/-1", FOR TOTAL OF NINE FASTENERS PER SIDE.
2. CORRUGATED NAILS ARE UTILIZED ON DOUBLE BACK JAMBS ONLY. OMIT NAILS ON SOLID MULL POST CONFIGURATIONS.
3. ANCHOR SPACING FOR BOTH INSWING & OUTSWING.

Kristina S. Daugherty
Texas P.E. No. 104390

NO.	DATE		BY

REVISIONS

PRODUCT:
FIBERLAST GLAZED IMPACT
12-0x6-8
INSWING/OUTSWING COMPOSITE DOOR

PART OR ASSEMBLY:
ANCHORING LOCATIONS
& DETAILS

JELD-WEN, INC.
3737 LAKEPORT BLVD.
KLAMATH FALLS, OR, 97601
PH. 541-882-3451

DATE:	12/09/09
SCALE:	3/8"=1'
DWG. BY:	GL
CHK. BY:	S. FREY
DRAWING NO.:	JW132009
SHEET	17 OF 18

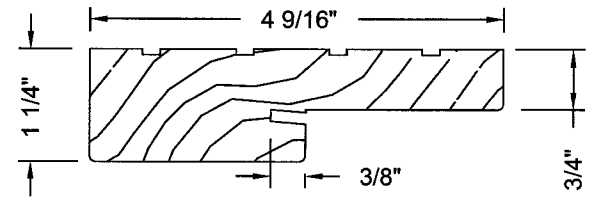

1 2 3 4 WOOD JAMB FINGERJOINTED PINE
SCALE: 6" =1'-0"

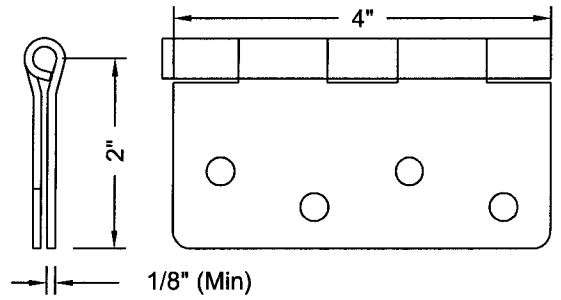

6 BUTT HINGE 4x4x12 GA. STEEL
SCALE: 6" =1'-0"

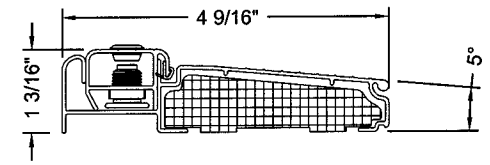

11 ENDURA INSWING THRESHOLD
6063 T5 AL AND COMPOSITE
SCALE: 6" =1'-0"

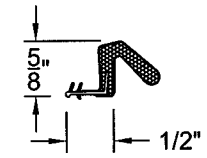

10 COMPRESSION WEATHERSTRIP
LOXSEAL 9650 FOAM
SCALE: 6" =1'-0"

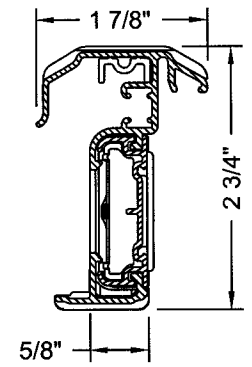

13 ENDURA ULTIMATE HURRICANE
6063-T6 ALUMINUM ASTRAGAL
SCALE: 6" =1'-0"

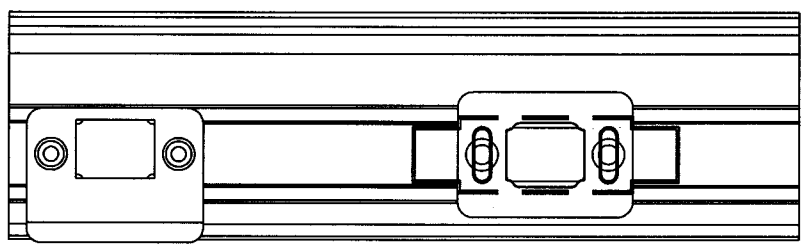

15 ATA STRIKE & DEADBOLT
STEEL
SCALE: 6" =1'-0"

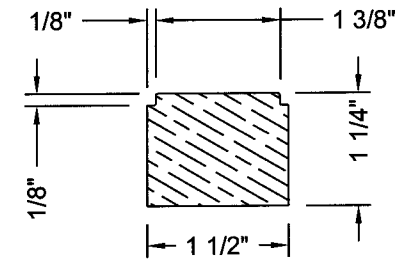

19 18 LATCH STILE
HINGE STILE
FINGERJOINTED PINE
SCALE: 6" =1'-0"

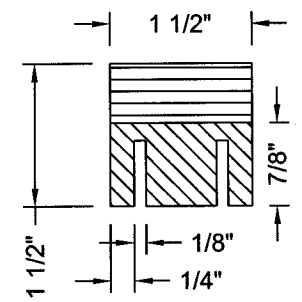

17 BOTTOM RAIL
PVC CAPPED LVL
SCALE: 6" =1'-0"

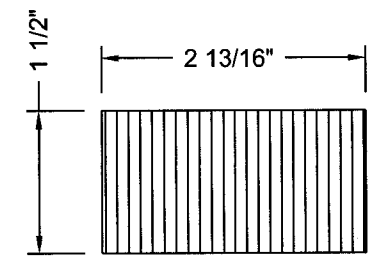

20 INNER STILE
LAMINATED VENEER LUMBER (LVL)
SCALE: 6" =1'-0"

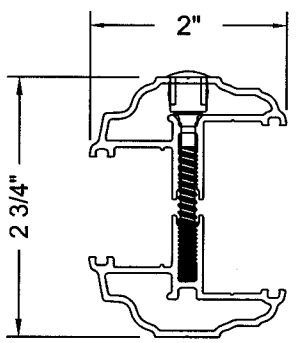

21 ODL LITE - FRAME
6063 T5 ALUMINUM
SCALE: 6" =1'-0"

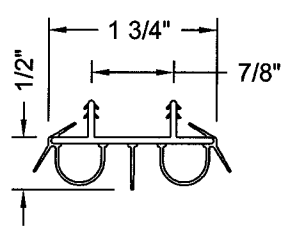

32 DOOR BOTTOM SWEEP
VINYL
SCALE: 6" =1'-0"

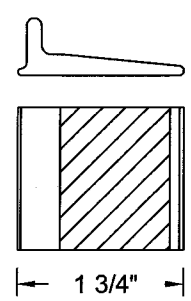

33 CORNER PADS
PLASTIC
SCALE: 6"=1'-0"

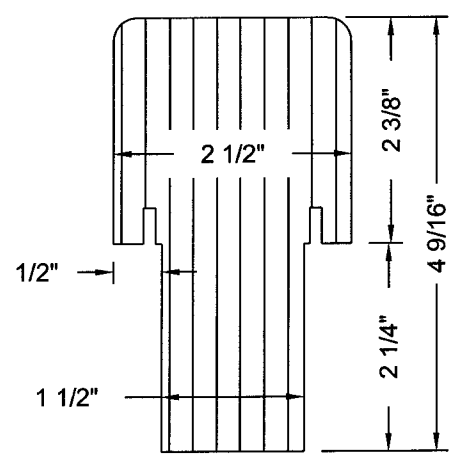

35 MULL POST
LAMINATED VENEER LUMBER (LVL)
SCALE: 6" =1'-0"

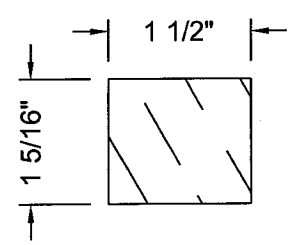

16 TOP RAIL
FINGERJOINTED PINE
SCALE: 6" =1'-0"

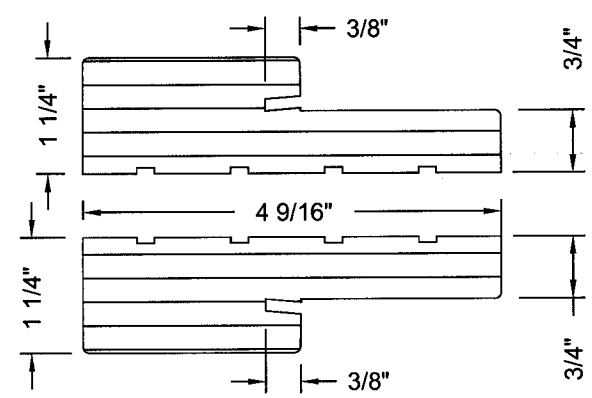

38 DOUBLE BACK JAMB
LAMINATED VENEER LUMBER (LVL)
SCALE: 6" =1'-0"

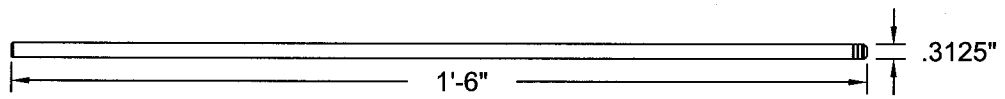

40 ASTRAGAL BOLT SCALE: 3" =1'-0"
MATERIAL: COLD ROLLED STEEL, ZINC & YELLOW CHROMATE

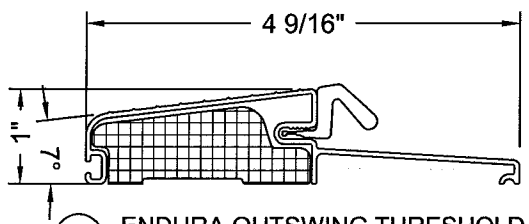

39 ENDURA OUTSWING THRESHOLD
6063 T5 AL AND COMPOSITE
SCALE: 6" =1'-0"

JELD-WEN, INC.
3737 LAKEPORT BLVD.
KLAMATH FALLS, OR, 97601
PH. 541-882-3451

PRODUCT: FIBERLAST GLAZED IMPACT 12-0x6-8 INSWING/OUTSWING COMPOSITE DOOR

PART OR ASSEMBLY: UNIT COMPONENTS

NO.	DATE	BY

REVISIONS

Kristina S. Daugherty
Texas P.E. No. 104390

DATE: 12/09/09
SCALE: AS NOTED
DWG. BY: GL
CHK. BY: S. FREY
DRAWING NO.: JW132009
SHEET 18 OF 18