THERMA TRU®

118 INDUSTRIAL DR., EDGERTON, OH 43517
TEL. (419)298-1740

CLASSIC CRAFT RUSTIC

SINGLE "IMPACT" DOOR
INSWING / OUTSWING

EVALUATED FOR USE IN THE STATE OF TEXAS

THE THERMA–TRU FIBERGLASS DOOR DESCRIBED HEREIN COMPLIES WITH THE INTERNATIONAL RESIDENTIAL CODE (IRC), SECTIONS R301 & R613 AND THE INTERNATIONAL BUILDING CODE (IBC), SECTIONS 1714.5 1405.12, 1609, 2403 AND 2404 (INCLUDING TEXAS REVISIONS) SUBJECT TO THE FOLLOWING CONDITIONS:

1. *Anchors shall be as listed and spaced as shown in the details. Anchor embedment to base material shall be beyond wall dressing or stucco.*
2. *When used in wind borne debris regions (SEAWARD and INLAND I ZONES), the Product complies with Sections R301.2.1.2 and 1609.1.4 as an impact resistant product and does not require the use of an approved impact resistant covering. This product does not meet the requirements for enhanced protection of essential facilities as defined in ASTM E1996.*
3. *Allowable design pressure requirements must be equal to or less than the design pressure rating shown in the design pressure chart, sheet 1 of this drawing.*
4. *Conditions not covered by this drawing are subject to further engineering analysis.*

SUPPORTING DOCUMENTS & EVIDENCE

1. *Testing per TAS 201–94, TAS 202–94 and TAS 203–94 as performed by Testing Evaluation Laboratories Inc. and reported in test report number TEL 06–1031–4, dated October 31, 2006 and signed by Wendell W. Haney, P.E.*
2. *Anchor analysis for loading conditions prepared, signed and sealed by Wendell W. Haney, P.E..*
3. *Certificate of Participation issued by the National Accreditation and Management Institute, Inc., certifying that Thermo–Tru Corporation. is manufacturing products within a Quality Assurance program.*

TABLE OF CONTENTS

SHEET #	DESCRIPTION
1	TYPICAL ELEVATION, DESIGN PRESSURES & GENERAL NOTES
2	DOOR PANEL DETAILS (CLASSIC CRAFT RUSTIC)
3	HORIZONTAL CROSS SECTIONS
4	VERTICAL CROSS SECTIONS
5	FRAME ANCHORING
6	BILL OF MATERIALS & COMPONENTS

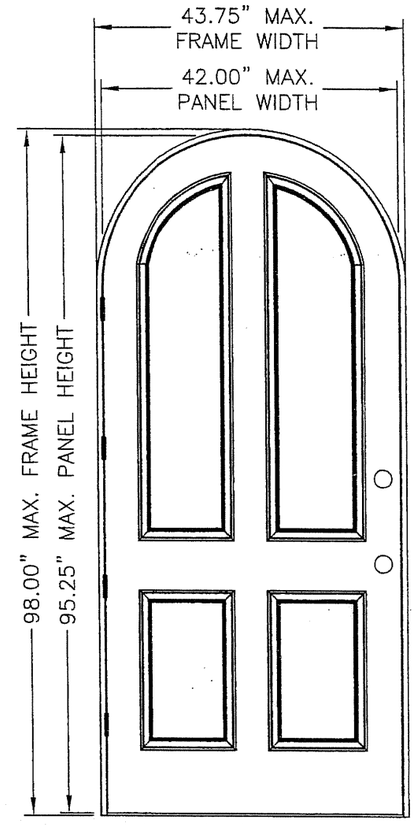

"CLASSIC CRAFT RUSTIC"

DOOR TYPE	SWING	OVERALL FRAME DIMENSION	DESIGN PRESSURE	
			POSITIVE	NEGATIVE
CLASSIC CRAFT RUSTIC	OUTSWING	43.75" X 96.50"	+65.0	−65.0
	INSWING	43.75" X 98.00"	+65.0	−65.0

Documents Prepared By:
R.W. BUILDING CONSULTANTS, INC.
P.O. Box 230 Valrico FL. 33595
Phone No.: 813.659.9197
Florida Board of Professional Engineers
Certificate Of Authorization No. 9813
Wendell W. Haney, P.E. No. 54158
2-16-07

PRODUCT: SINGLE OPAQUE FIBERGLASS DOOR "IMPACT" INSWING / OUTSWING
PART OR ASSEMBLY: TYPICAL ELEVATION, DESIGN PRESSURES & GENERAL NOTES

NO.	DATE	BY	REVISIONS

DATE: 12/15/06
SCALE: N.T.S.
DWG. BY: AEM
CHK. BY: WWH
DRAWING NO.: TX–3171
SHEET 1 OF 6

© 2006 R.W. BUILDING CONSULTANTS INC.

R:\A - Projects\Project Folders\Proj 1101 - 1200\pf1104\8'0 TX-EVL.dwg, R1

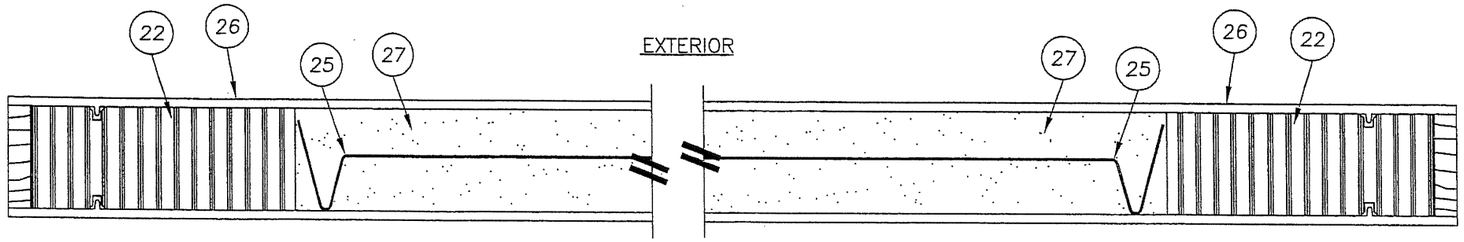

2/2 HORIZONTAL CROSS SECTION
CLASSIC CRAFT RUSTIC

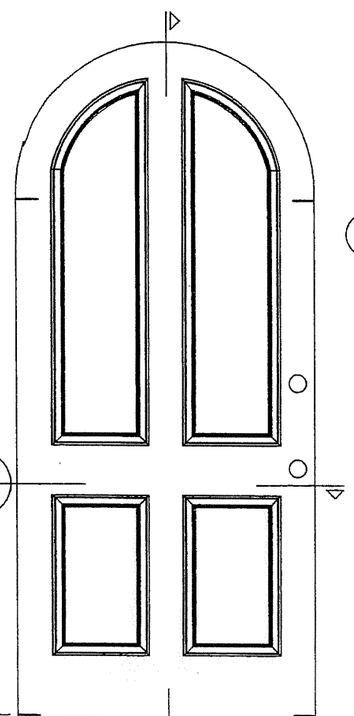

1/2
CLASSIC CRAFT RUSTIC

32 TYP. 4 CORNERS OF PANEL

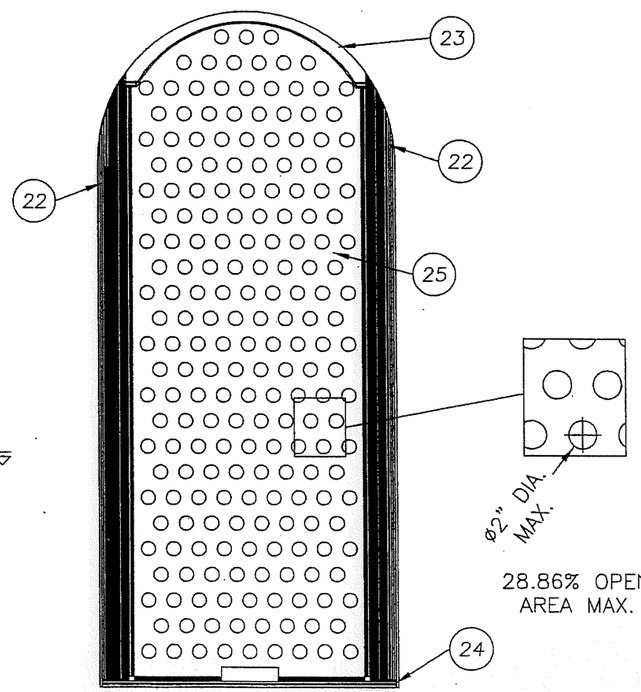

28.86% OPEN AREA MAX.

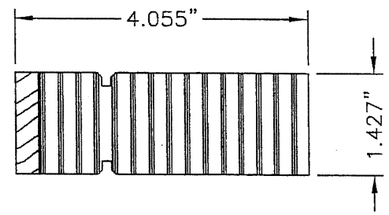

22 LOCK & HINGE STILE
CLASSIC CRAFT RUSTIC

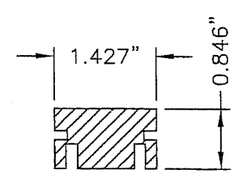

24 BOTTOM RAIL
CLASSIC CRAFT RUSTIC

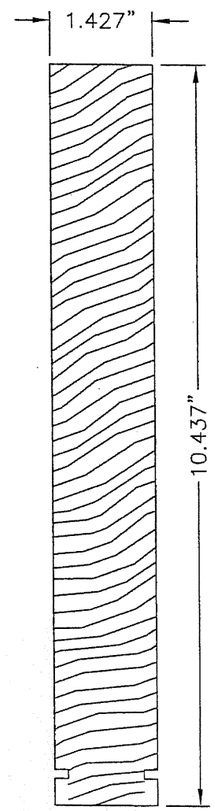

23 TOP RAIL
CLASSIC CRAFT RUSTIC

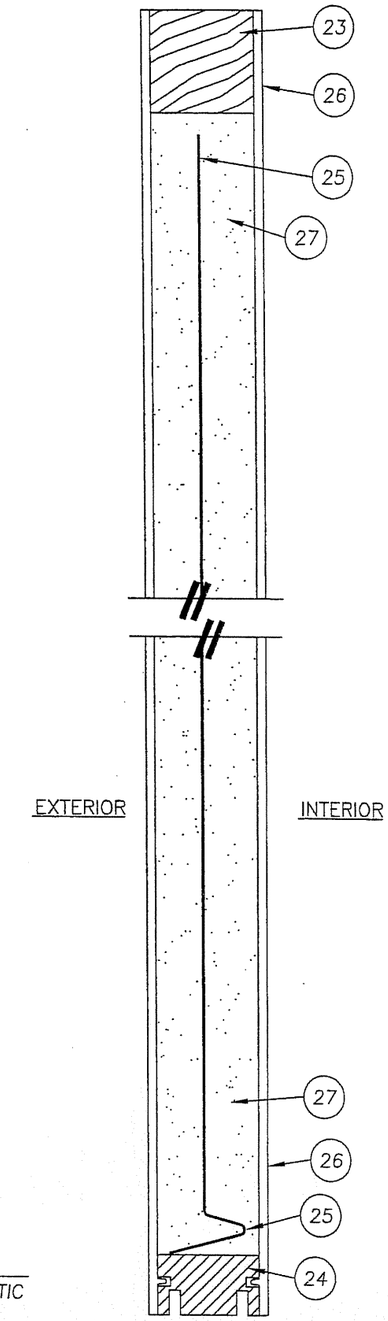

1/2 VERTICAL CROSS SECTION
CLASSIC CRAFT RUSTIC

Documents Prepared By:
R.W. BUILDING CONSULTANTS, INC.
P.O. Box 230 Valrico FL. 33595
Phone No.: 813.659.9497
Florida Board of Professional Engineers
Certificate Of Authorization No. 9813
Wendell W. Hanks, P.E. No. 54158
2-16-07

PRODUCT: SINGLE OPAQUE FIBERGLASS DOOR "IMPACT" INSWING / OUTSWING

PART OR ASSEMBLY: DOOR PANEL DETAILS (CLASSIC CRAFT RUSTIC)

NO.	DATE	REVISIONS	BY

DATE: 12/15/06
SCALE: N.T.S.
DWG. BY: AEM
CHK. BY: WWH
DRAWING NO.: TX-3171
SHEET 2 OF 6

© 2006 R.W. BUILDING CONSULTANTS INC.

R:\A - Projects\Project Folders\Proj 1101 - 1200\pf1104\8'0 TX-EVL.dwg, R2

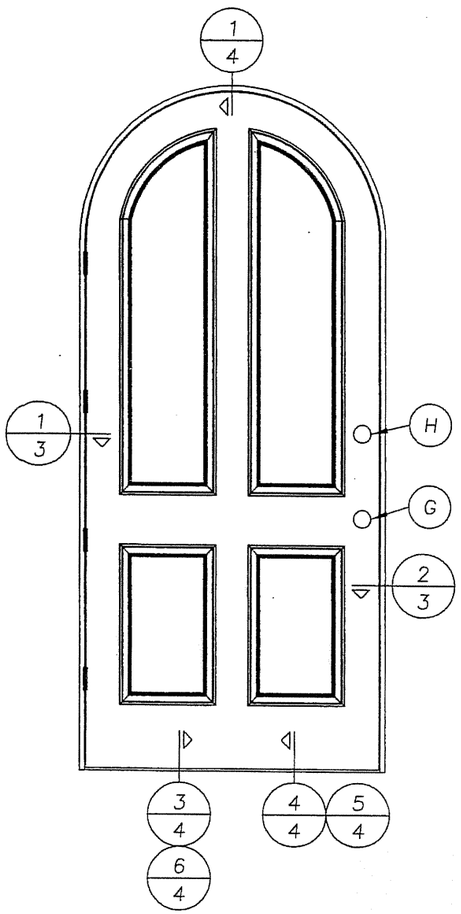

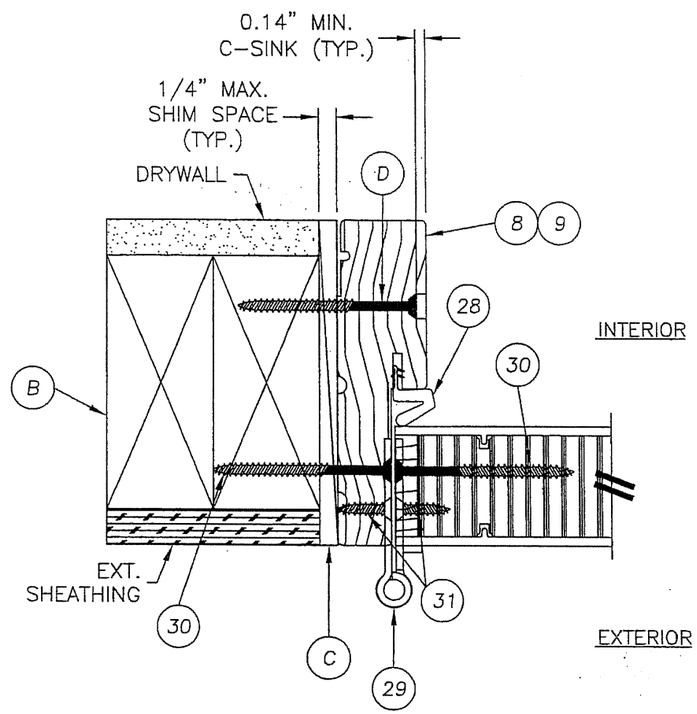

1/3 HORIZONTAL CROSS SECTION
@ HINGE
SMOOTH STAR PANEL SHOWN
SEE DOOR PANEL DETAILS FOR
OPTIONAL PANEL TYPES

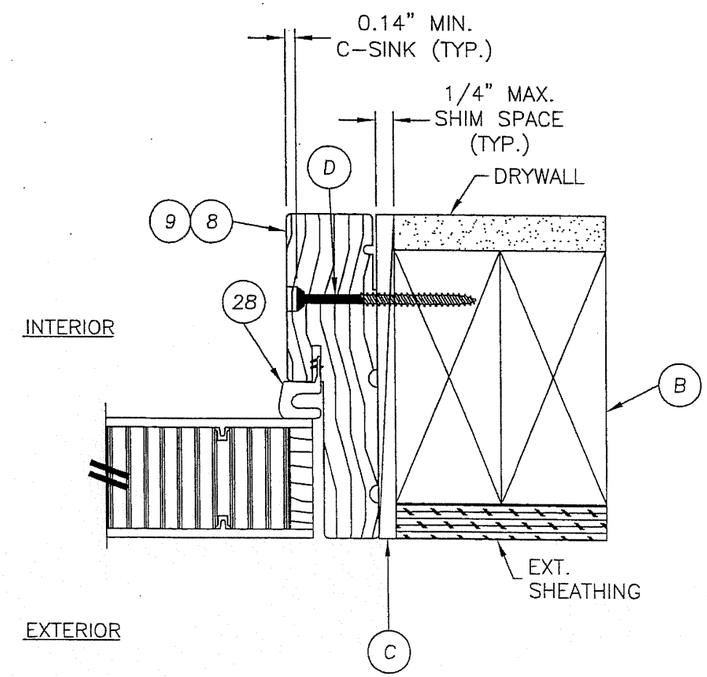

2/3 HORIZONTAL CROSS SECTION
@ LATCH
SMOOTH STAR PANEL SHOWN
SEE DOOR PANEL DETAILS FOR
OPTIONAL PANEL TYPES

Documents Prepared By:
RW BUILDING CONSULTANTS, INC.
P.O. Box 230 Valrico FL. 33595
Phone No.: 813.659.9197
Florida Board of Professional Engineers
Certificate Of Authorization No. 9813
Wendell W. Honey, P.E. No. 54158
2-16-07

PRODUCT: SINGLE OPAQUE FIBERGLASS DOOR "IMPACT" INSWING / OUTSWING
PART OR ASSEMBLY: HORIZONTAL CROSS SECTIONS

NO.	DATE	REVISIONS	BY

DATE: 12/15/06
SCALE: N.T.S.
DWG. BY: AEM
CHK. BY: WWH
DRAWING NO.: TX-3171
SHEET 3 OF 6

© 2006 R.W. BUILDING CONSULTANTS INC.

R:\A - Projects\Project Folders\Proj 1101 - 1200\pf1104\80 TX-EVL.dwg, R3

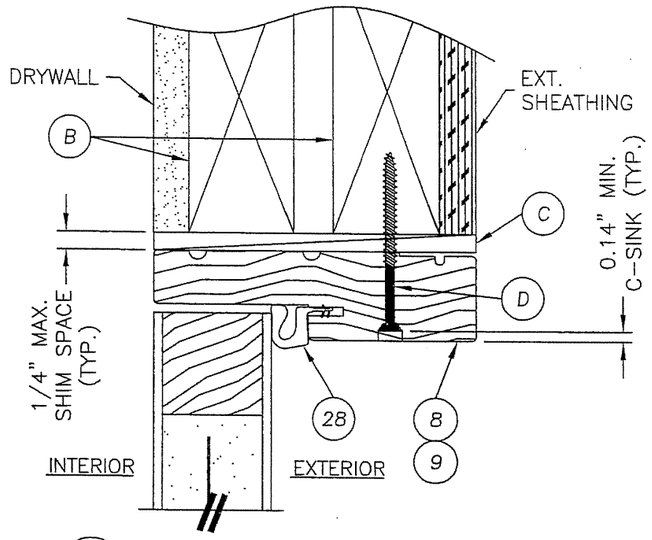

1/4 VERTICAL CROSS SECTION @ HEAD

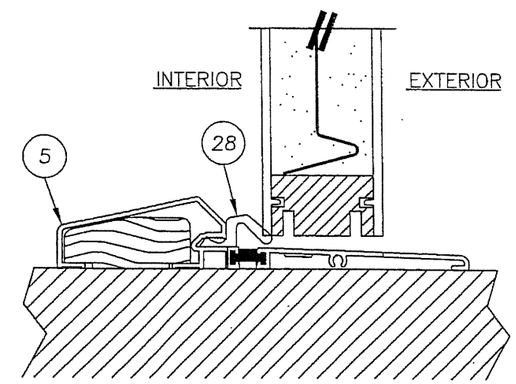

3/4 VERTICAL CROSS SECTION @ THRESHOLD

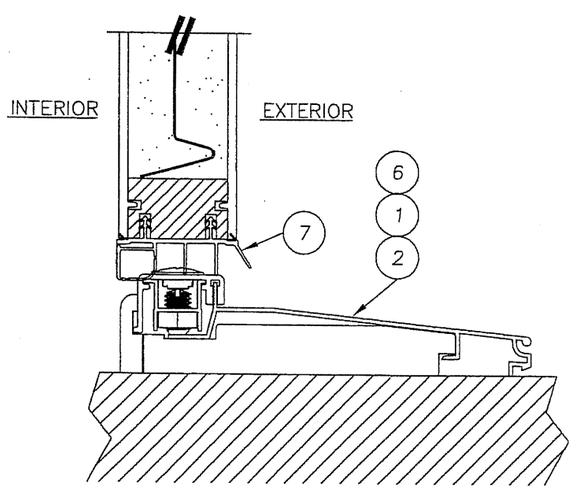

4/4 VERTICAL CROSS SECTION @ THRESHOLD

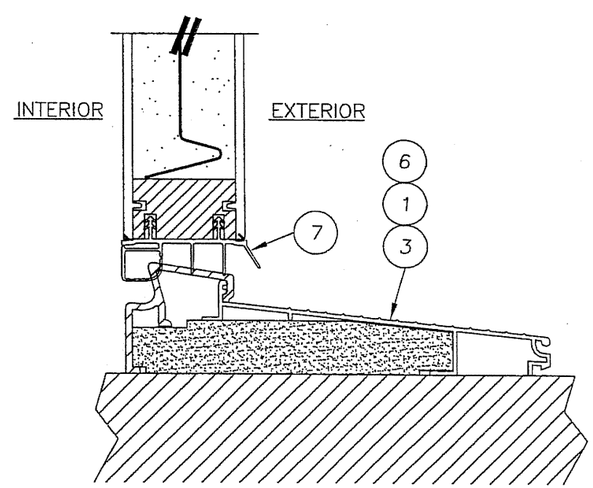

5/4 VERTICAL CROSS SECTION @ THRESHOLD

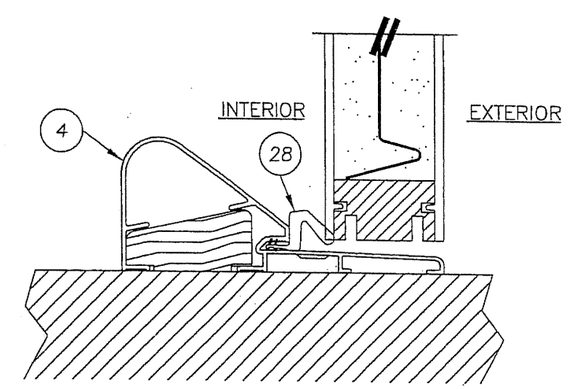

6/4 VERTICAL CROSS SECTION @ THRESHOLD

Documents Prepared By:
RW BUILDING CONSULTANTS, INC.
P.O. Box 230 Valrico FL. 33595
Phone No.: 813.659.9197
Florida Board of Professional Engineers
Certificate Of Authorization No. 9813
Wendell W. Hanby, P.E. No. 54158
2-16-07

PRODUCT: SINGLE OPAQUE FIBERGLASS DOOR "IMPACT" INSWING / OUTSWING
PART OR ASSEMBLY: VERTICAL CROSS SECTIONS

NO.	DATE	REVISIONS	BY

DATE: 12/15/06
SCALE: N.T.S.
DWG. BY: AEM
CHK. BY: WWH
DRAWING NO.: TX-3171
SHEET 4 OF 6

© 2006 R.W. BUILDING CONSULTANTS INC.

R:\A - Projects\Project Folders\Proj 1101 - 1200\pf1104\8'0 TX-EVL.dwg, R4

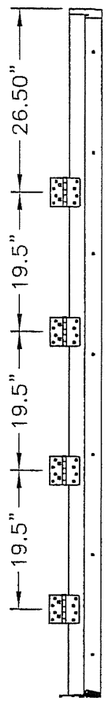

HINGE DETAIL

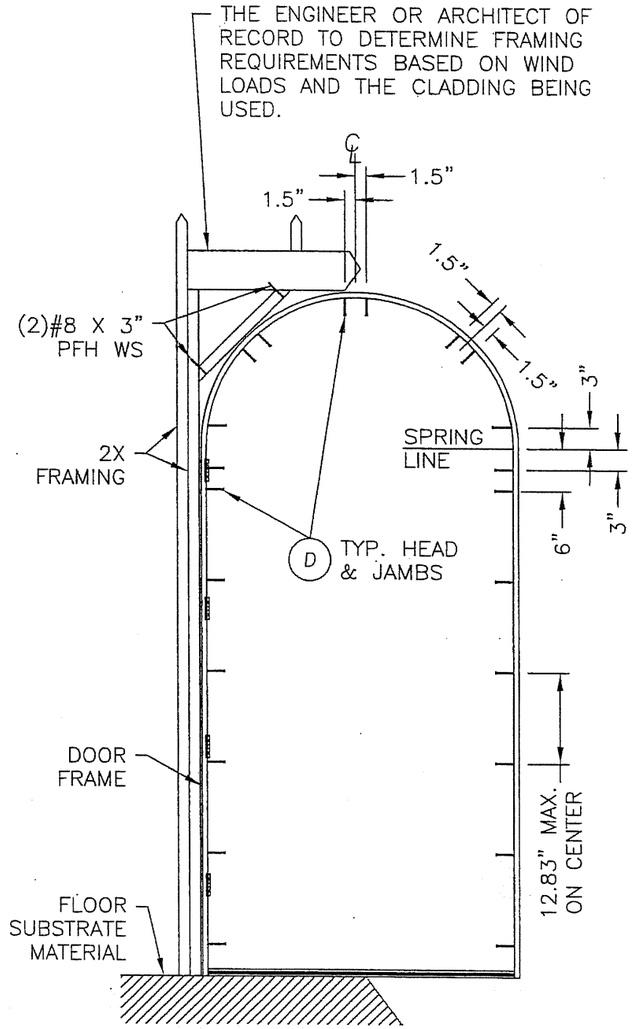

FRAME ANCHORING

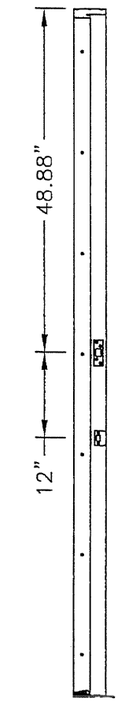

STRIKE PLATE DETAIL

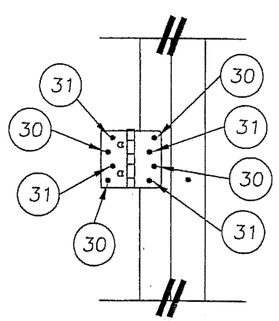

HINGE DETAIL

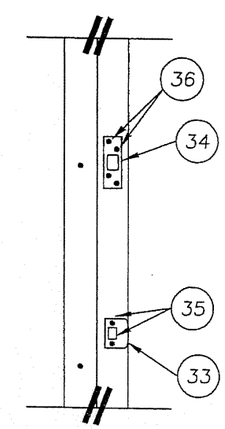

STRIKE PLATE DETAIL

Documents Prepared By:

RW BUILDING CONSULTANTS, INC.
P.O. Box 230 Valrico FL. 33595
Phone No.: 813.659.9197
Florida Board of Professional Engineers
Certificate Of Authorization No. 9813
Wendell W. Haney, P.E. No. 54158
2-16-07

PRODUCT: SINGLE OPAQUE FIBERGLASS DOOR "IMPACT" INSWING / OUTSWING

PART OR ASSEMBLY: FRAME ANCHORING

NO.	DATE	REVISIONS	BY

DATE: 12/15/06
SCALE: N.T.S.
DWG. BY: AEM
CHK. BY: WWH
DRAWING NO.: TX-3171
SHEET 5 OF 6

© 2006 R.W. BUILDING CONSULTANTS INC.

R:\A - Projects\Project Folders\Proj 1101 - 1200\pf1104\B'0 TX-EVL.dwg, R5

BILL OF MATERIALS		
ITEM	DESCRIPTION	MATERIAL
B	2X FRAMING	WOOD
C	1/4" MAX. SHIM SPACE	WOOD
D	#10 X 2-1/2" PFH WOOD SCREW	STEEL
G	KWIKSET 200 SERIES PASSAGE LOCK	STEEL
H	KWIKSET 600 SERIES DEADBOLT	STEEL
I	1/4" X 3-3/4" ITW TAPCON	STEEL
1	INSWING ADJUSTABLE THRESHOLD (IS300AJ)	ALUM./WOOD
2	INSWING THRESHOLD (IS300HP5)	–
3	INSWING SELF ADJUST THERMAL BREAK THRESHOLD (ISP30M)	ALUM./COMP.
4	OUTSWING COASTAL THRESHOLD	ALUM./WOOD
5	OUTSWING STANDARD THRESHOLD	ALUM./WOOD
6	INSWING THRESHOLD	–
7	DOOR BOTTOM SWEEP	VINYL
8	JAMB (PINE)	WOOD
9	JAMB (OAK)	WOOD
22	LOCK & HINGE STILE (CLASSIC CRAFT RUSTIC)	WOOD/LVL
23	TOP RAIL (CLASSIC CRAFT RUSTIC)	WOOD
24	BOTTOM RAIL (CLASSIC CRAFT RUSTIC)	PVC
25	PANEL REINFORCEMENT 0.023" THK. (CLASSIC CRAFT RUSTIC)	STEEL
26	DOOR SKIN 0.125" THK. (CC RUSTIC) Fy = 6,000 PSI MIN.	FIBERGLASS
27	FOAM CORE	POLYURETHANE
28	WEATHERSTRIP	FOAM
29	HINGE	STEEL
30	#10 X 2-1/2" PFH SCREW	STEEL
31	#10 X 3/4" PFH SCREW	STEEL
32	#9 X 3" PFH WOOD SCREW	STEEL
33	LATCH STRIKE PLATE	STEEL
34	SECURITY STRIKE PLATE (SINGLE DOOR ONLY)	STEEL
35	#8 X 3" PFH SCREW	STEEL
36	#8 X 3" PFH SCREW	STEEL
52	DOOR BOTTOM SWEEP	VINYL

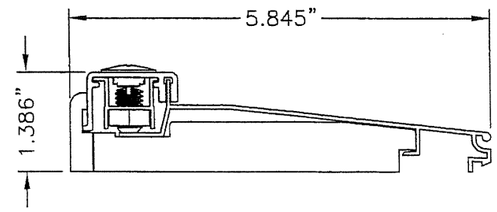

2 THRESHOLD
INSWING ADJUSTABLE

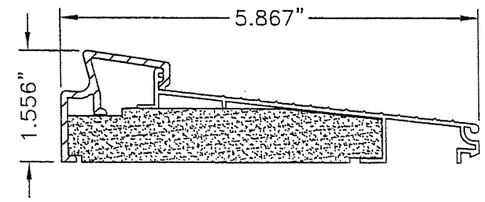

3 THRESHOLD
INSWING SELF-ADJUST

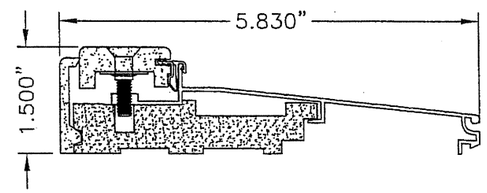

6 THRESHOLD
INSWING
MAX. DP RATING = +/- 50.0 PSF

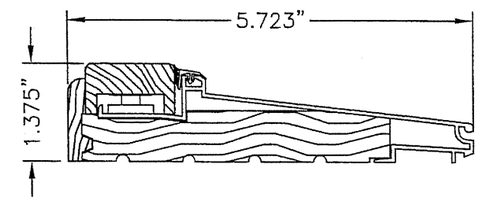

1 THRESHOLD
INSWING ADJUSTABLE

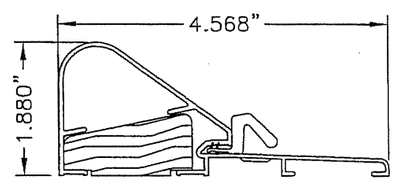

4 THRESHOLD
OUTSWING COASTAL

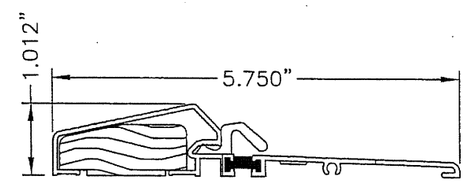

5 THRESHOLD
OUTSWING STANDARD

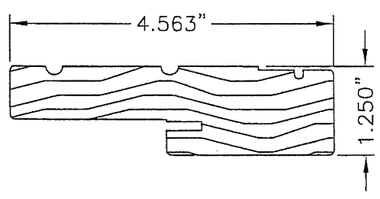

9 8 JAMB

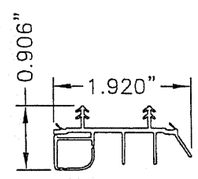

7 SWEEP

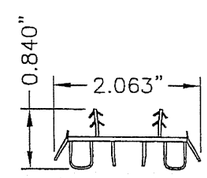

52 SWEEP

Documents Prepared By:
RW BUILDING CONSULTANTS, INC.
P.O. Box 230 Valrico FL. 33595
Phone No.: 813.659.9197
Florida Board of Professional Engineers
Certificate Of Authorization No. 9813
Wendell W. Hone, P.E. No. 54158
2-16-07

PRODUCT: SINGLE OPAQUE FIBERGLASS DOOR "IMPACT" INSWING / OUTSWING
PART OR ASSEMBLY: BILL OF MATERIALS & COMPONENTS

NO.	DATE	REVISIONS	BY

DATE: 12/15/06
SCALE: N.T.S.
DWG. BY: AEM
CHK. BY: WWH
DRAWING NO.: TX-3171
SHEET 6 OF 6

© 2006 R.W. BUILDING CONSULTANTS INC.

R:\A - Projects\Project Folders\Proj 1101 - 1200\pf1104\B'0 TX-EVL.dwg, R6