Trinity Glass
INTERNATIONAL

4621 192nd STREET EAST TACOMA, WA 98446
TEL: 253-875-7300 FAX: 253-875-7301

OPAQUE FIBERGLASS SINGLE DOOR WITH SIDELITES (CHS) OUTSWING "IMPACT"

EVALUATED FOR USE IN THE STATE OF TEXAS

THE TRINITY FIBERGLASS DOOR DESCRIBED HEREIN COMPLIES WITH THE INTERNATIONAL RESIDENTIAL CODE (IRC), SECTIONS R301 & R613 AND THE INTERNATIONAL BUILDING CODE (IBC), SECTIONS 1714.5 1405.12, 1609, 2403 AND 2404 (INCLUDING TEXAS REVISIONS) SUBJECT TO THE FOLLOWING CONDITIONS:

1. Anchors shall be as listed and spaced as shown in the details. Anchor embedment to base material shall be beyond wall dressing or stucco.
2. When used in wind borne debris regions (SEAWARD and INLAND I ZONES), the Product complies with Sections R301.2.1.2 and 1609.1.4 as an impact resistant product and does not require the use of an approved impact resistant covering. This product does not meet the requirements for enhanced protection of essential facilities as defined in ASTM E1996.
3. Allowable design pressure requirements must be equal to or less than the design pressure rating shown in the design pressure chart, sheet 1 of this drawing.
4. Conditions not covered by this drawing are subject to further engineering analysis.

SUPPORTING DOCUMENTS & EVIDENCE

1. Testing per TAS 201-94, TAS 202-94 and TAS 203-94 as performed by Testing Evaluation Laboratories Inc. and reported in test report number TEL 06-0918-2, dated October 10, 2006 and signed by Wendell W. Haney, P.E.
2. Anchor analysis for loading conditions prepared, signed and sealed by Wendell W. Haney, P.E. Glass load resistance report ASTM E1300-00, prepared by Wendell W. Haney, P.E..
3. Certificate of Participation issued by the National Accreditation and Management Institute, Inc., certifying that Trinity Glass Int'l is manufacturing products within a Quality Assurance program.

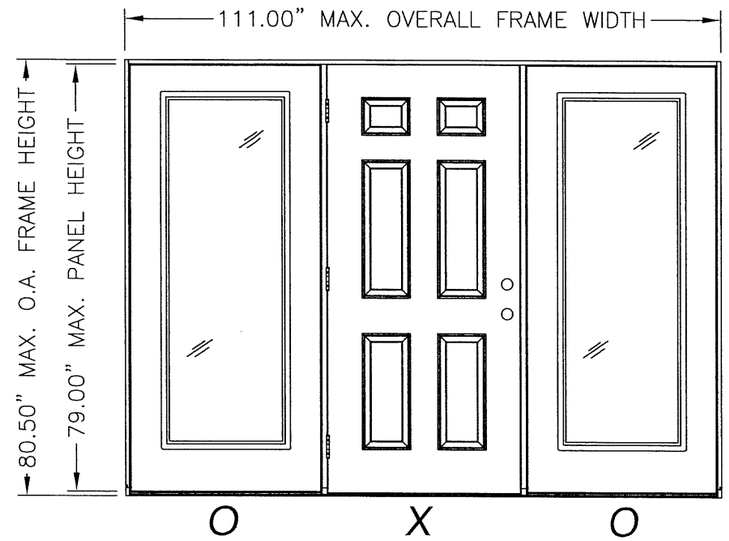

SINGLE OPAQUE DOOR
W/SIDELITES (CHS)

TABLE OF CONTENTS	
SHEET #	DESCRIPTION
1	TYPICAL ELEVATIONS, DESIGN PRESSURES & GENERAL NOTES
2	DOOR & SIDELITE PANEL CROSS SECTIONS & GLAZING DETAIL
3	HORIZONTAL CROSS SECTIONS
4	VERTICAL CROSS SECTIONS
5	FRAME ANCHORING
6	COMPONENTS
7	BILL OF MATERIALS & COMPONENTS

DOOR CONFIGURATION	OVERALL FRAME DIMENSION	OVERALL D.L.O. DIMENSION	DESIGN PRESSURE (PSF)	
			POSITIVE	NEGATIVE
(C.H.S.)	111.00" X 80.50"	21.00" X 63.00"	+60.0	-60.0

Documents Prepared By:
RW BUILDING CONSULTANTS, INC.
P.O. Box 230 Valrico FL. 33595
Phone No.: 813.659.9197
Florida Board of Professional Engineers
Certificate Of Authorization No. 9813
Wendell W. Haney, P.E. No. 54158
4-4-07

PRODUCT: OPAQUE FIBERGLASS SGL. DOOR WITH SIDELITES (CHS) OUTSWING "IMPACT"

PART OR ASSEMBLY: TYPICAL ELEVATIONS, DESIGN PRESSURES & GENERAL NOTES

REVISIONS		
NO.	DATE	BY

DATE: 02/08/07
SCALE: N.T.S.
DWG. BY: EW
CHK. BY: WWH
DRAWING NO.: TX-3435
SHEET 1 OF 7

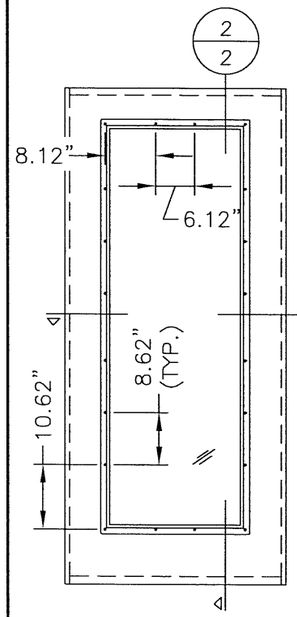

SIDELITE PANEL

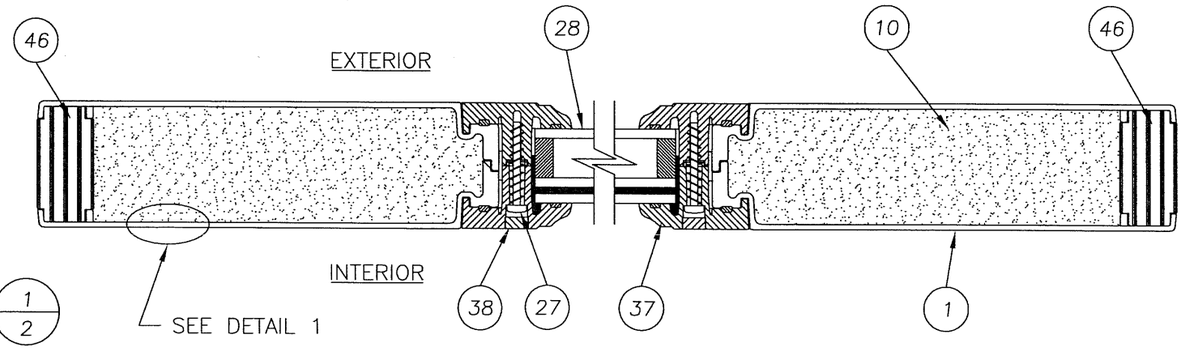

1/2 HORIZONTAL CROSS SECTION SIDELITE PANEL

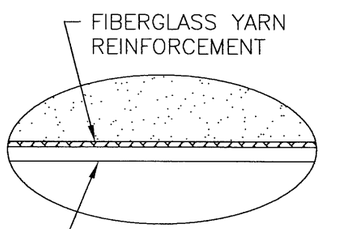

DETAIL 1

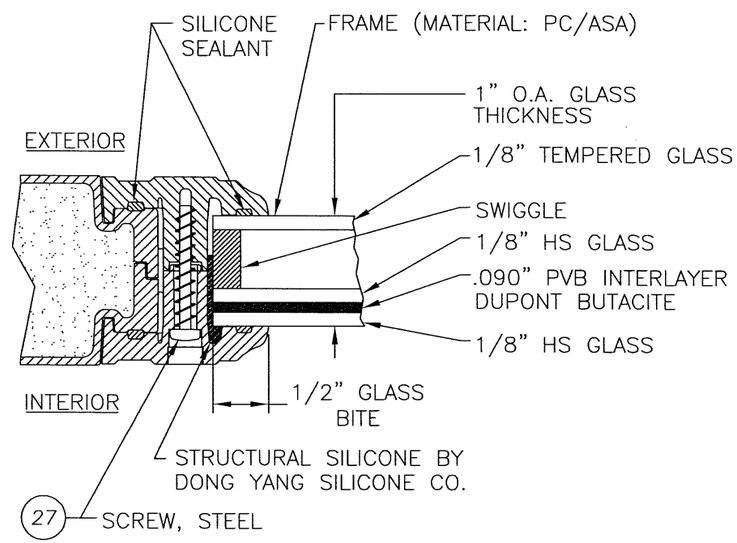

GLAZING DETAIL

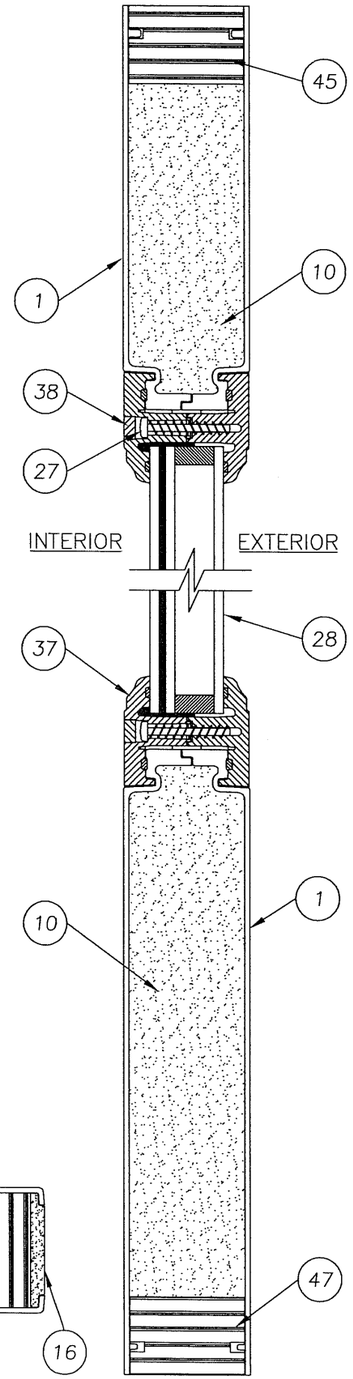

2/2 VERTICAL CROSS SECTION SIDELITE PANEL

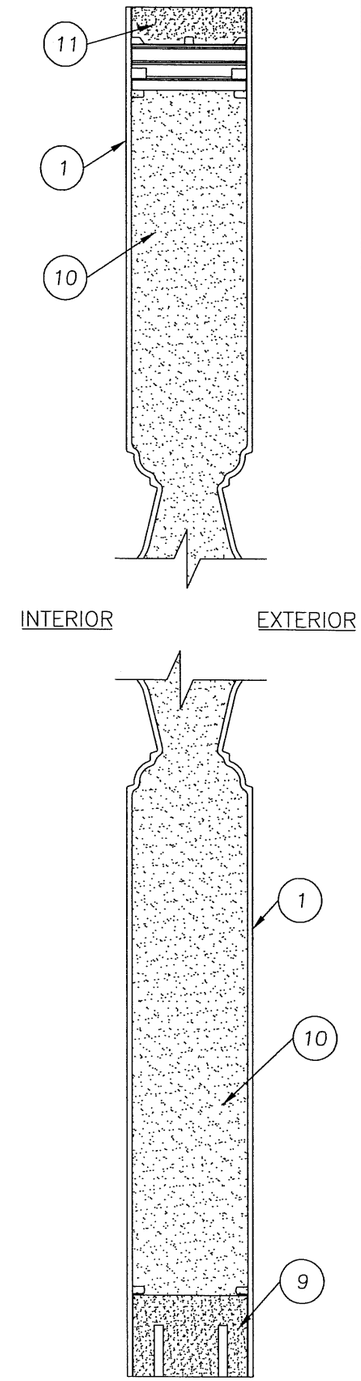

4/2 VERTICAL CROSS SECTION DOOR PANEL

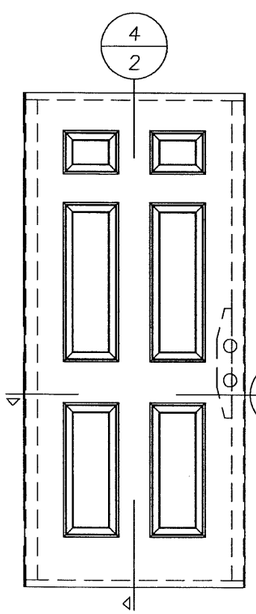

DOOR PANEL

DOOR & SIDE LITE DETAIL ILLUSTRATION

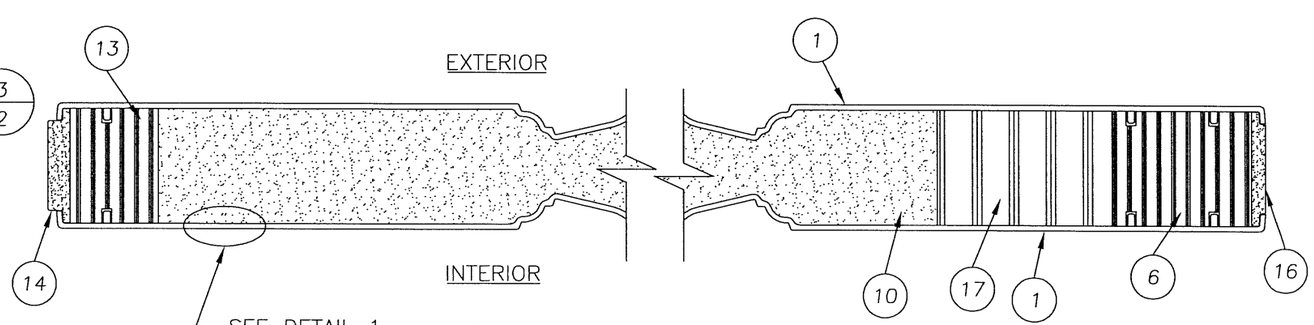

3/2 HORIZONTAL CROSS SECTION DOOR PANEL

Documents Prepared By:
RW BUILDING CONSULTANTS, INC.
P.O. Box 230 Valrico FL. 33595
Phone No.: 813.659.9197
Florida Board of Professional Engineers
Certificate Of Authorization No. 9813
Wendell W. Hanex P.E. No. 54158
4-4-07

PRODUCT: OPAQUE FIBERGLASS SGL. DOOR WITH SIDELITES (CHS) OUTSWING "IMPACT"

PART OR ASSEMBLY: DOOR & SIDELITE PANEL CROSS SECTIONS & GLAZING DETAIL

NO.	DATE	BY

REVISIONS

DATE: 02/08/07
SCALE: N.T.S.
DWG. BY: EW
CHK. BY: WWH
DRAWING NO.: TX-3435
SHEET 2 OF 7

© 2007 R.W. BUILDING CONSULTANTS INC.

R:\A - Projects\Project Folders\Proj 1101 - 1200\pr1173\D. RWBC Drawings\TX-3435\TX-3435-2.DWG, Model

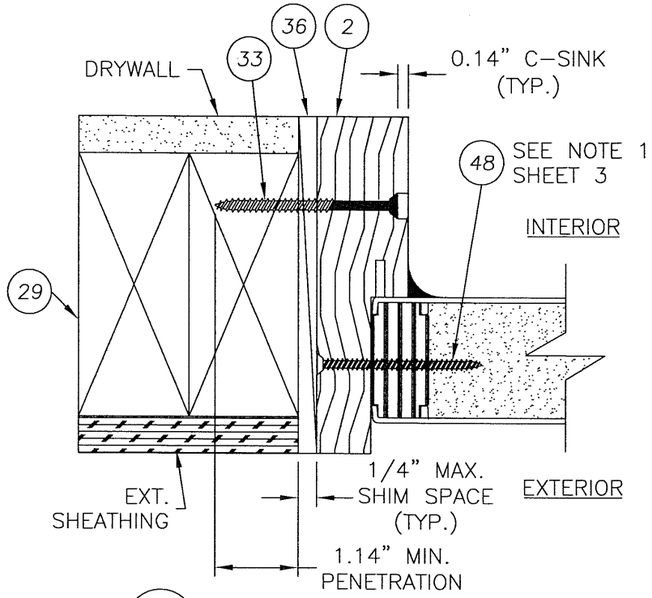

1/3 HORIZONTAL CROSS SECTION @ SIDELITE JAMB

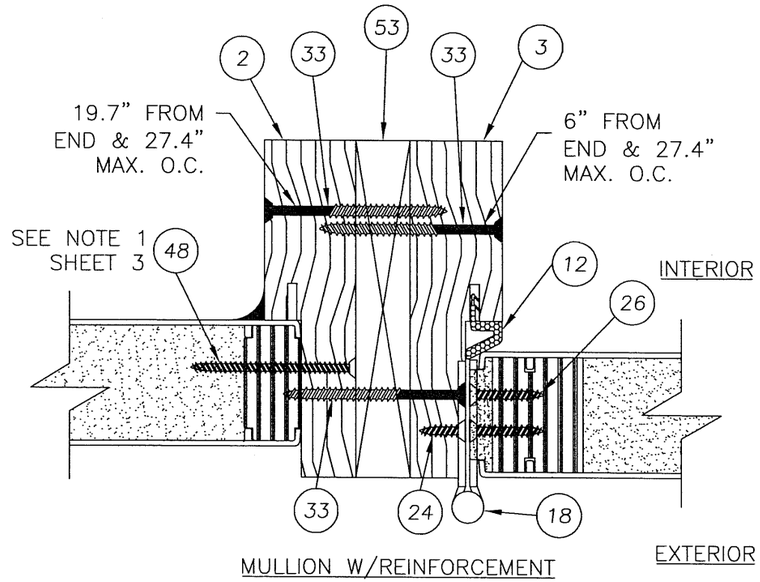

MULLION W/REINFORCEMENT

2/3 HORIZONTAL CROSS SECTION HINGE JAMB

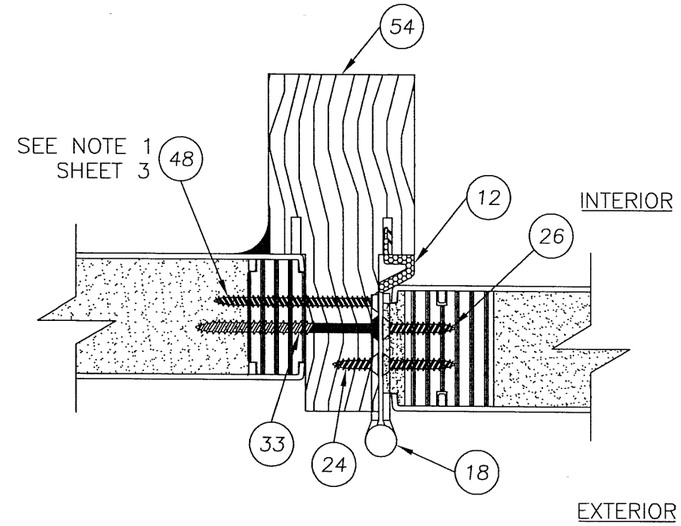

3/3 HORIZONTAL CROSS SECTION @ HINGE JAMB

NOTE

1. ITEM #48 – #9 X 2-1/4" PFH SCREWS THRU JAMB OR MULLION INTO SIDELITE LOCATED @ 6", 27", 50-1/4", & 72-1/8" FROM TOP OF FRAME TYP. BOTH SIDE JAMBS OR MULLIONS.

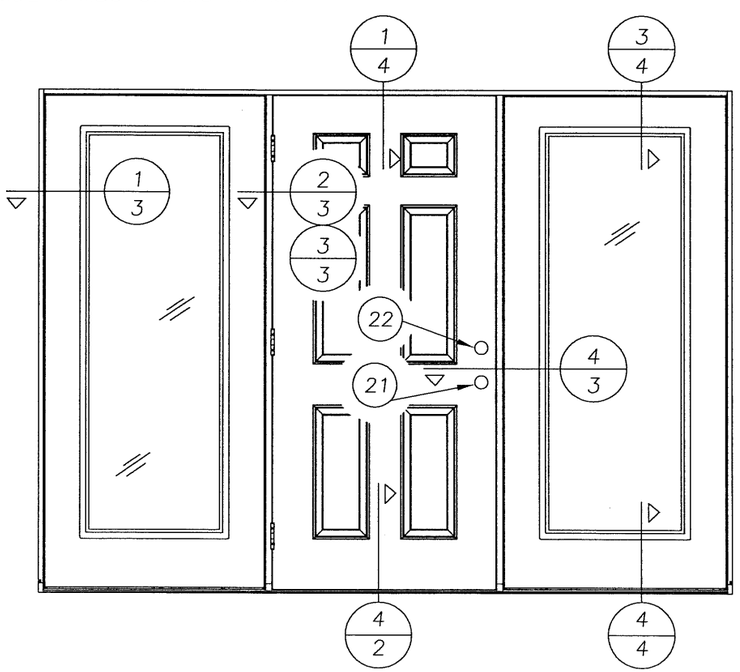

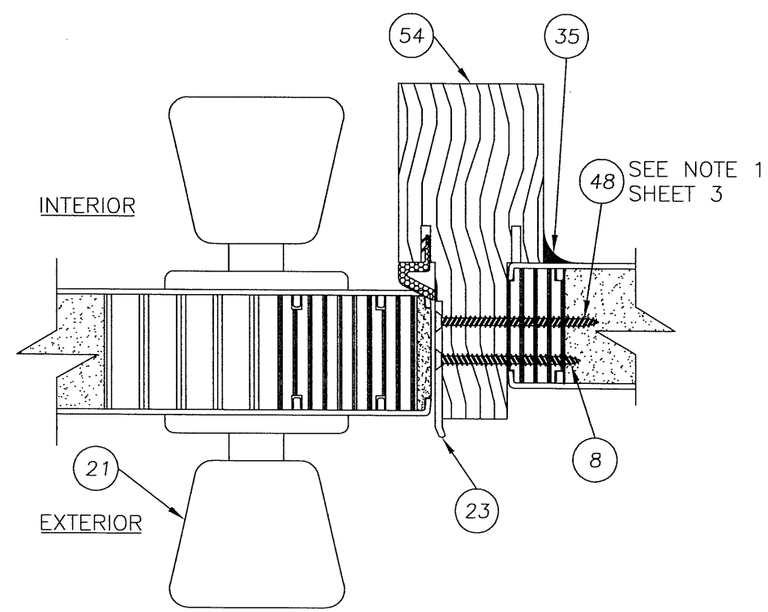

4/3 HORIZONTAL CROSS SECTION @ LATCH (CHS) W/INTEGRAL MULLION

Documents Prepared By:
R.W. BUILDING CONSULTANTS, INC.
P.O. Box 230 Valrico FL. 33595
Phone No.: 813.659.9197
Florida Board of Professional Engineers
Certificate Of Authorization No. 9813
Wendell W. Haney P.E. No. 54158
4-4-07

PRODUCT: OPAQUE FIBERGLASS SGL. DOOR WITH SIDELITES (CHS) OUTSWING "IMPACT"

PART OR ASSEMBLY: HORIZONTAL CROSS SECTIONS

NO.	DATE	REVISIONS	BY

DATE: 02/08/07
SCALE: N.T.S.
DWG. BY: EW
CHK. BY: WWH
DRAWING NO.: TX-3435
SHEET 3 OF 7

© 2007 R.W. BUILDING CONSULTANTS INC.

R:\A Projects\Project Folders\Proj 1101 1200\pr1175\D. RWBC Drawings\TX 3435\TX 3435.DWG, Model

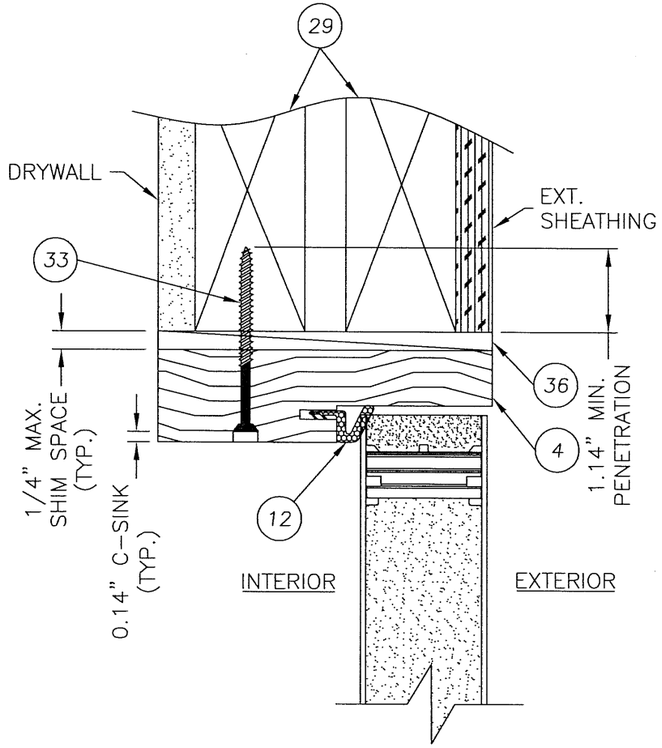

1/4 VERTICAL CROSS SECTION
HEAD JAMB – DOOR

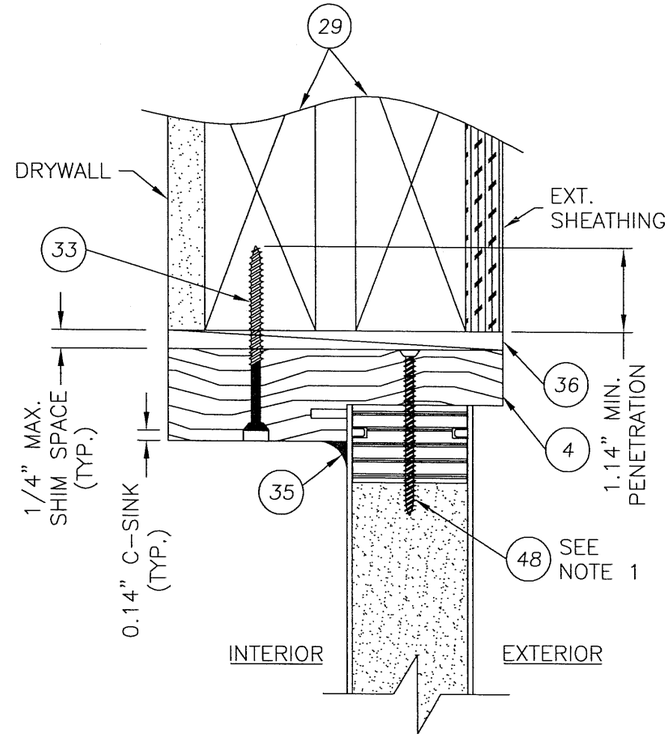

3/4 VERTICAL CROSS SECTION
HEAD JAMB – SIDELITE

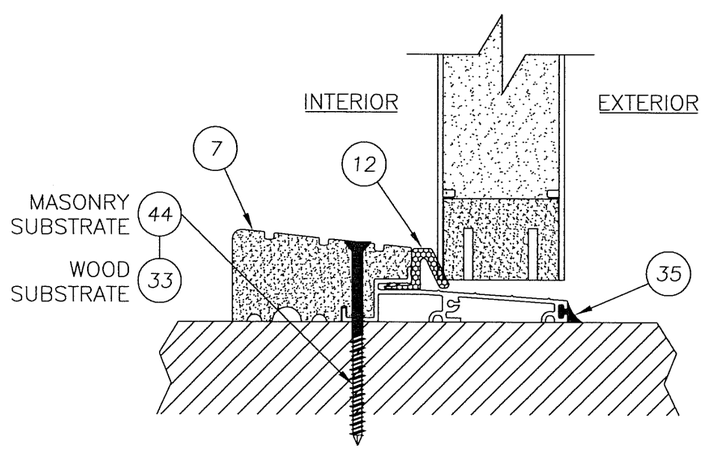

2/4 VERTICAL CROSS SECTION
OUTSWING THRESHOLD

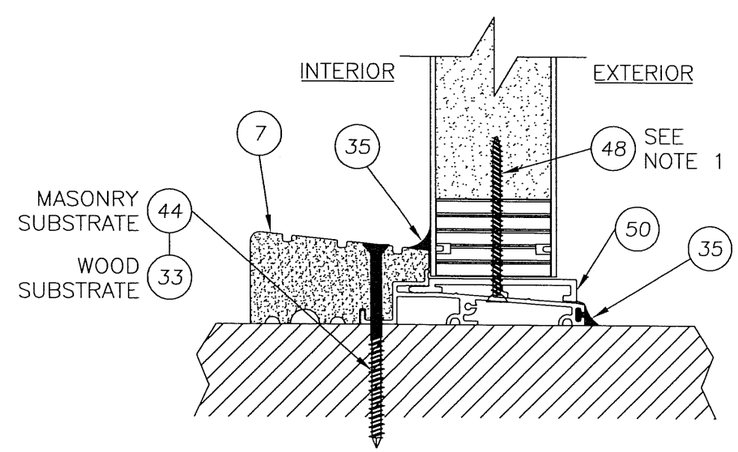

4/4 VERTICAL CROSS SECTION
OUTSWING – SIDELITE

NOTE

1. ITEM #48 – #9 X 2-1/4" PFH SCREWS THRU HEAD & SILL JAMB LOCATED 3" FROM EACH FRAME END AND ON CENTER LINE.

Documents Prepared By:
RW BUILDING CONSULTANTS, INC.
P.O. Box 230 Valrico FL. 33595
Phone No.: 813.659.9197
Florida Board of Professional Engineers
Certificate Of Authorization No. 9813
Wendell W. Harris, P.E. No. 54158

PRODUCT: OPAQUE FIBERGLASS SGL. DOOR WITH SIDELITES (CHS) OUTSWING "IMPACT"

PART OR ASSEMBLY: VERTICAL CROSS SECTIONS

NO.	DATE	REVISIONS	BY

DATE: 02/08/07
SCALE: N.T.S.
DWG. BY: EW
CHK. BY: WWH
DRAWING NO.: TX-3435
SHEET 4 OF 7

© 2007 R.W. BUILDING CONSULTANTS INC.

R:\A - Projects\Project Folders\Proj 1101 - 1200\pr1173\D. RWBC Drawings\TX-3435\TX-3435-4.DWG, Model

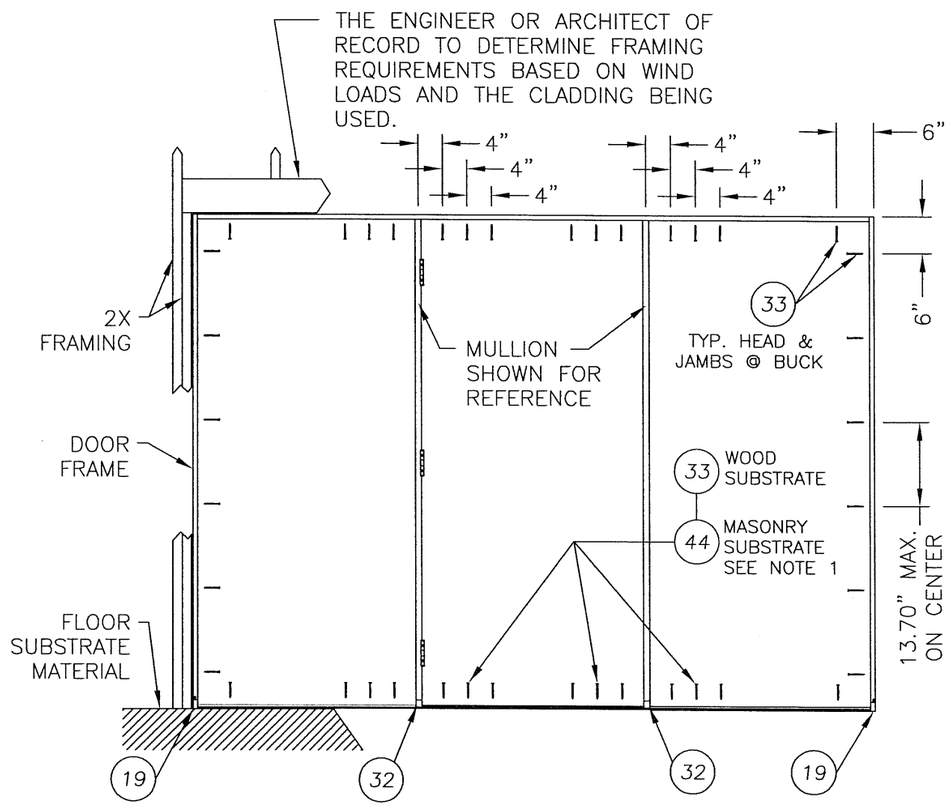

FRAME ANCHORING
OXO (CHS) W/INTEGRAL MULLION

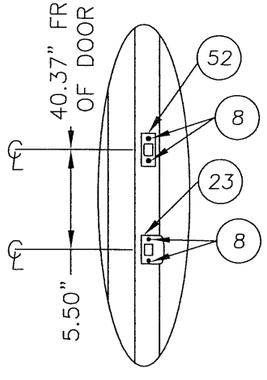

STRIKE PLATE DETAIL
@ MULLION

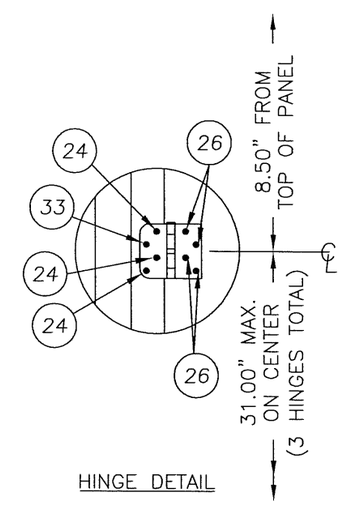

HINGE DETAIL

NOTES:

1. 1/4" ITW CONCRETE SCREWS ANCHORING FRAME AND/OR SILL REQUIRE A MINIMUM 2-1/2" CLEARANCE TO MASONRY EDGES AND A MINIMUM 3" CLEARANCE TO ADJACENT CONCRETE SCREWS UNLESS OTHERWISE NOTED BY CONCRETE SCREW MANUFACTURER.

Documents Prepared By:
RW BUILDING CONSULTANTS, INC.
P.O. Box 230 Valrico FL. 33595
Phone No.: 813.659.9197
Florida Board of Professional Engineers
Certificate Of Authorization No. 9813
Wendell W. Honey, P.E. No. 54158

PRODUCT: OPAQUE FIBERGLASS SGL. DOORS WITH SIDELITES OUTSWING "IMPACT" (CHS)

PART OR ASSEMBLY: FRAME ANCHORING

NO.	DATE	BY	REVISIONS

DATE: 02/08/07
SCALE: N.T.S.
DWG. BY: EW
CHK. BY: WWH
DRAWING NO.: TX-3435
SHEET 5 OF 7

© 2007 R.W. BUILDING CONSULTANTS INC.

R:\A - Projects\Project Folders\Proj 1101 - 1200\p1173\D. RWBC Drawings\TX-3435\TX-3435-5.DWG, Model

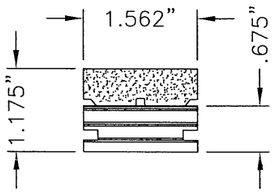

11 TOP RAIL DOOR

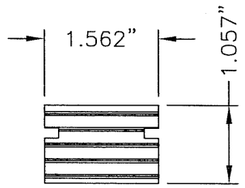

45 TOP RAIL SIDELITE

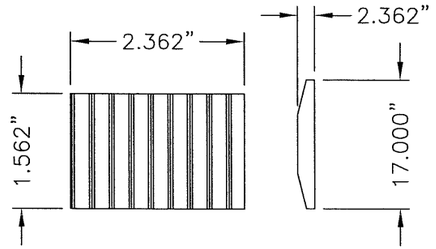

17 LOCK BLOCK

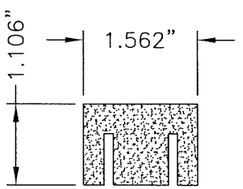

9 BOTTOM RAIL DOOR

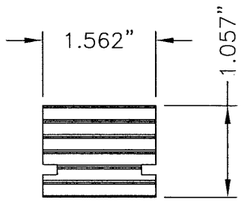

47 BOTTOM RAIL SIDELITE

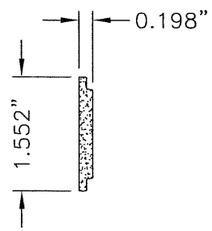

16 LATCH STILE EDGE

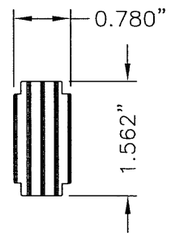

46 SIDELITE STILE

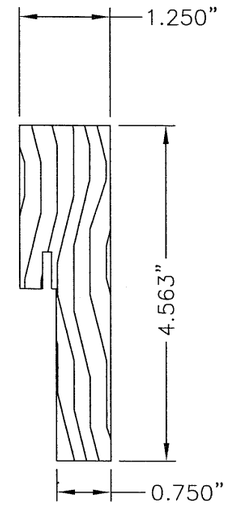

2 3 4 JAMBS

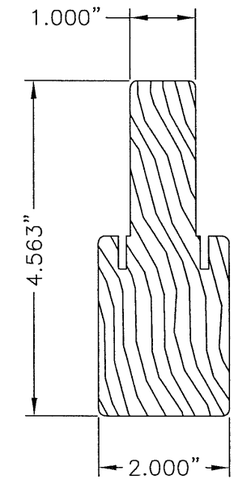

54 INTEGRAL MULLION CHS (OX, OXO)

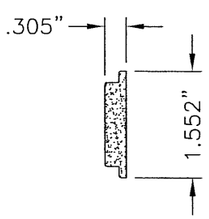

14 HINGE STILE EDGE

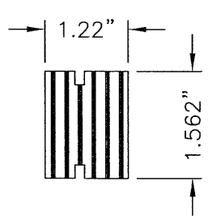

13 HINGE STILE SUPPORTER

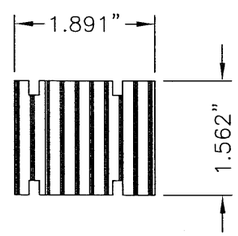

6 LATCH STILE SUPPORTER

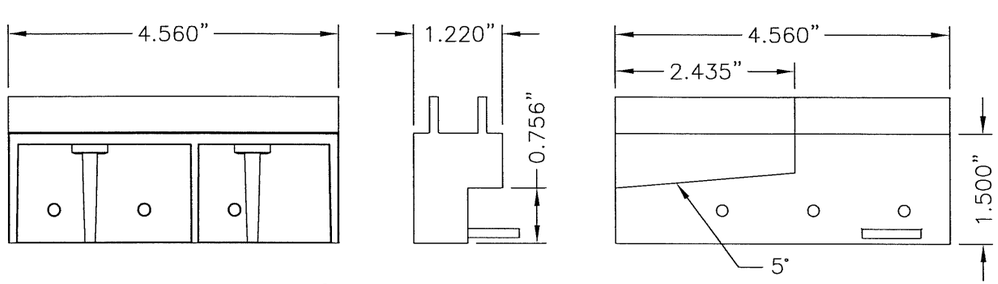

19 SILL-TO-JAMB KIT DETAIL OPTIONAL

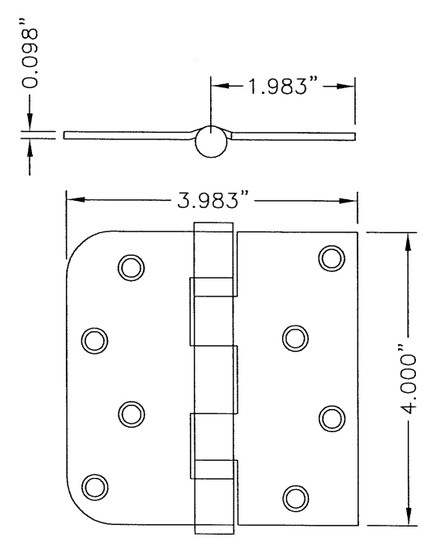

18 HINGE

Documents Prepared By:
R.W. BUILDING CONSULTANTS, INC.
P.O. Box 230 Valrico FL. 33595
Phone No.: 813.659.9197
Florida Board of Professional Engineers
Certificate Of Authorization No. 9813
Wendell W. Hang, P.E. No. 54158
4-4-07

PRODUCT: OPAQUE FIBERGLASS SGL. DOOR WITH SIDELITES (CHS) OUTSWING "IMPACT"

PART OR ASSEMBLY: COMPONENTS

NO.	DATE	REVISIONS	BY

DATE: 02/08/07
SCALE: N.T.S.
DWG. BY: EW
CHK. BY: WWH
DRAWING NO.: TX-3435
SHEET 6 OF 7

© 2007 R.W. BUILDING CONSULTANTS INC.

R:\A - Projects\Project Folders\Proj 1101 - 1200\p1173\D. RWBC Drawings\TX-3435\TX-3435-6.DWG, Model

ITEM	DESCRIPTION	MATERIAL
1	FIBERGLASS SKIN BY TRINITY 0.079" MIN. THK. W/FIBERGLASS YARN REINF.	FIBERGLASS
2	SIDELITE JAMB – FINGER–JOINT PINE	WOOD
3	HINGE & LATCH JAMB – FINGER–JOINT PINE	WOOD
4	HEAD JAMB – FINGER–JOINT PINE	WOOD
6	LVL LATCH STILE SUPPORTER	POPLAR
7	OUTSWING THRESHOLD (HIGH RISE TYPE)(ENDUR PRODUCTS INC.)	ALUM./COMP.
8	#8 X 2" PFH WOOD SCREW	STEEL
9	COMPOSITE BOTTOM RAIL	PVC
10	DOOR PANEL CORE FOAMED IN PLACE BY TRINITY	POLYURETHANE
11	COMPOSITE/LVL TOP RAIL	PVC/LVL
12	WEATHERSTRIP QEBD650 Q–LON	FOAM
13	LVL HINGE STILE SUPPORTER	POPLAR
14	COMPOSITE HINGE STILE EDGE	PVC
16	COMPOSITE LATCH STILE EDGE	PVC
17	LVL LOCK BLOCK	POPLAR
18	3.983" X 4.0" HINGE MIN. 0.098" THICK	STEEL
19	SILL TO JAMB KIT (OPTIONAL)	PC/ASA
21	KWIKSET 200 SERIES PASSAGE LOCK	STEEL
22	KWIKSET 600 SERIES DEADBOLT	STEEL
23	STRIKE PLATE	STEEL
24	HINGE TO JAMB SCREW #9 X 5/8" PFHWS (3 REQUIRED EACH HINGE)	STEEL
26	HINGE TO DOOR SCREW #9 X 1.0" PFHWS (4 REQUIRED EACH HINGE)	STEEL
27	LITE FRAME SCREW #8 X 1–1/8" SELF THREADING	STEEL
28	1" INSULATED LAMINATED GLASS (INTERLAYER DUPONT BUTACITE) 1/8" TEMPERED – AIR – 1/8" HS – .090" PVB – 1/8" HS	GLASS
29	2X FRAMING	WOOD
32	MULLION BASE KIT	PC/ASA
33	#10 X 2.5" PFH WS	STEEL
35	LATEX CAULK	LATEX
36	1/4" MAX. SHIM SPACE	WOOD
37	LITE FRAME BY TRINITY	PC/ASA
38	SCREW PLUG	PC/ASA
44	1/4" X 2–3/4" ITW TAPCON	STEEL
45	LVL SIDELITE TOP RAIL	POPLAR
46	LVL SIDELITE STILE	POPLAR
47	LVL SIDELITE BOTTOM RAIL	POPLAR
48	#9 X 2–1/4" SELF DRILLING SCREW	STEEL
50	OUTSWING SIDELITE SPACER	PVC
52	DEADBOLT STRIKE	STEEL
54	INTEGRAL MULLION (CHS)	WOOD

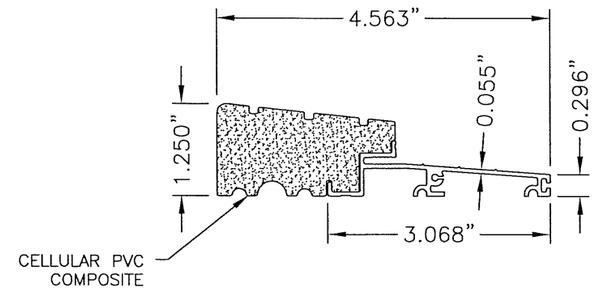

7 OUTSWING THRESHOLD
HIGH RISE TYPE

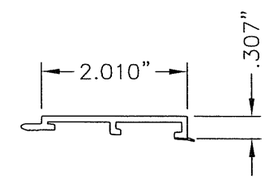

50 SIDELITE SPACER
OUTSWING

Documents Prepared By:
RW BUILDING CONSULTANTS, INC.
P.O. Box 230 Valrico FL. 33595
Phone No.: 813.659.9197
Florida Board of Professional Engineers
Certificate Of Authorization No. 9813
Wendell W. Haney, P.E. No. 54158
4-4-07

PRODUCT:
OPAQUE FIBERGLASS SGL. DOOR WITH SIDELITES (CHS) OUTSWING "IMPACT"

PART OR ASSEMBLY:
BILL OF MATERIALS & COMPONENTS

NO.	DATE	BY	REVISIONS

DATE: 02/08/07
SCALE: N.T.S.
DWG. BY: EW
CHK. BY: WWH
DRAWING NO.: TX–3435
SHEET 7 OF 7

© 2007 R.W. BUILDING CONSULTANTS INC.