| REVISIONS | | | |
|---|---|---|---|
| REV | DESCRIPTION | DATE | APPROVED |

NOTES:

1. THE PRODUCT SHOWN HEREIN IS DESIGNED AND MANUFACTURED TO COMPLY WITH REQUIREMENTS OF THE 2006 IBC AND IRC WITH STATE OF TEXAS MODIFICATIONS.
2. WOOD FRAMING AND MASONRY OPENING TO BE DESIGNED AND ANCHORED TO PROPERLY TRANSFER ALL LOADS TO STRUCTURE. FRAMING AND MASONRY OPENING IS THE RESPONSIBILITY OF THE ARCHITECT OR ENGINEER OF RECORD.
3. 1X BUCK OVER MASONRY/CONCRETE IS OPTIONAL. WHERE 1X BUCK IS NOT USED DISSIMILAR MATERIALS MUST BE SEPARATED WITH APPROVED COATING OR MEMBRANE. SELECTION OF COATING OR MEMBRANE IS THE RESPONSIBILITY OF THE ARCHITECT OR ENGINEER OF RECORD.
4. ALLOWABLE STRESS INCREASE OF 1/3 WAS NOT USED IN THE DESIGN OF THE PRODUCT SHOWN HEREIN. WIND LOAD DURATION FACTOR Cd=1.6 WAS USED FOR WOOD ANCHOR CALCULATIONS.
5. FRAME MATERIAL: ALUMINUM 6063–T6
6. UNITS MUST BE GLAZED PER ASTM E1300–04, SEE SHEET 8 FOR GLASS OPTIONS.
7. APPROVED IMPACT PROTECTIVE SYSTEM IS NOT REQUIRED FOR THIS PRODUCT IN WIND BORNE DEBRIS REGIONS.
8. SHIM AS REQUIRED AT EACH INSTALLATION ANCHOR WITH LOAD BEARING SHIM. SHIM WHERE SPACE OF 1/16" OR GREATER OCCURS. MAXIMUM ALLOWABLE SHIM STACK TO BE 1/4".
9. FOR ANCHORING INTO WOOD FRAMING OR 2X BUCK USE #14 WOOD SCREWS WITH SUFFICIENT LENGTH TO ACHIEVE A 1 3/4" MINIMUM EMBEDMENT INTO SUBSTRATE. LOCATE ANCHORS AS SHOWN IN ELEVATIONS AND INSTALLATION DETAILS.
10. FOR ANCHORING INTO MASONRY/CONCRETE USE 1/4" TAPCONS WITH SUFFICIENT LENGTH TO ACHIEVE A 1 1/4" MINIMUM EMBEDMENT INTO SUBSTRATE WITH 2 1/2'' MINIMUM EDGE DISTANCE. LOCATE ANCHORS AS SHOWN IN ELEVATIONS AND INSTALLATION DETAILS.
11. FOR ANCHORING INTO METAL STRUCTURE USE #14 SMS OR SELF DRILLING SCREWS WITH SUFFICIENT LENGTH TO ACHIEVE 3 THREADS MINIMUM BEYOND STRUCTURE INTERIOR WALL. LOCATE ANCHORS AS SHOWN IN ELEVATIONS AND INSTALLATION DETAILS.
12. ALL FASTENERS TO BE CORROSION RESISTANT.
13. INSTALLATION ANCHORS SHALL BE INSTALLED IN ACCORDANCE WITH ANCHOR MANUFACTURER'S INSTALLATION INSTRUCTIONS AND ANCHORS SHALL NOT BE USED IN SUBSTRATES WITH STRENGTHS LESS THAN THE MINIMUM STRENGTH SPECIFIED BELOW:
    A. WOOD – MINIMUM SPECIFIC GRAVITY OF G=0.42
    B. CONCRETE – MINIMUM COMPRESSIVE STRENGTH OF 3,192 PSI.
    C. MASONRY – STRENGTH CONFORMANCE TO ASTM C–90, GRADE N, TYPE 1 (OR GREATER).
    D. METAL STRUCTURE: STEEL 18GA, 33KSI OR ALUMINUM 6063–T5 1/8" THICK MINIMUM

TABLE OF CONTENTS


| SHEET NO. | DESCRIPTION |
|---|---|
| 1 | NOTES |
| 2 | ELEVATIONS |
| 3 | ANCHORING LAYOUT |
| 4 – 7 | CROSS SECTIONS |
| 8 | GLAZING DETAILS |
| 9 – 11 | INSTALLATION DETAILS |
| 12 | WEEP DETAILS |
| 13 | COMPONENTS |


© Copyright 2012 Solar Innovations, Inc. All Rights Reserved. These drawings are applicable only to the product specified herein, are the exclusive sole property of Solar Innovations, Inc., and are considered both confidential and proprietary. Any use of the information, design or drawings contained herein for any purpose whatsoever without the expressed written consent of a Solar Innovations, Inc. authorized individual is forbidden.

SIGNED: 10/12/2012

SOLAR INNOVATIONS, INC.
31 ROBERTS RD
PINE GROVE, PA 17963

SI 3350 FGW 3X8 PANEL 90° CORNER
NO POST INFOLD–IMPACT
NOTES

| DRAWN: | DWG NO. | REV |
|---|---|---|
| R.L. | 08–01846 | – |

| SCALE | DATE | SHEET |
|---|---|---|
| NTS | 09/19/12 | 1 OF 13 |

STATE OF TEXAS
LUIS R. LOMAS
101889
LICENSED
PROFESSIONAL ENGINEER

Luis R. Lomas P.E.
TX No.: 101889

| REVISIONS | | | |
|---|---|---|---|
| REV | DESCRIPTION | DATE | APPROVED |

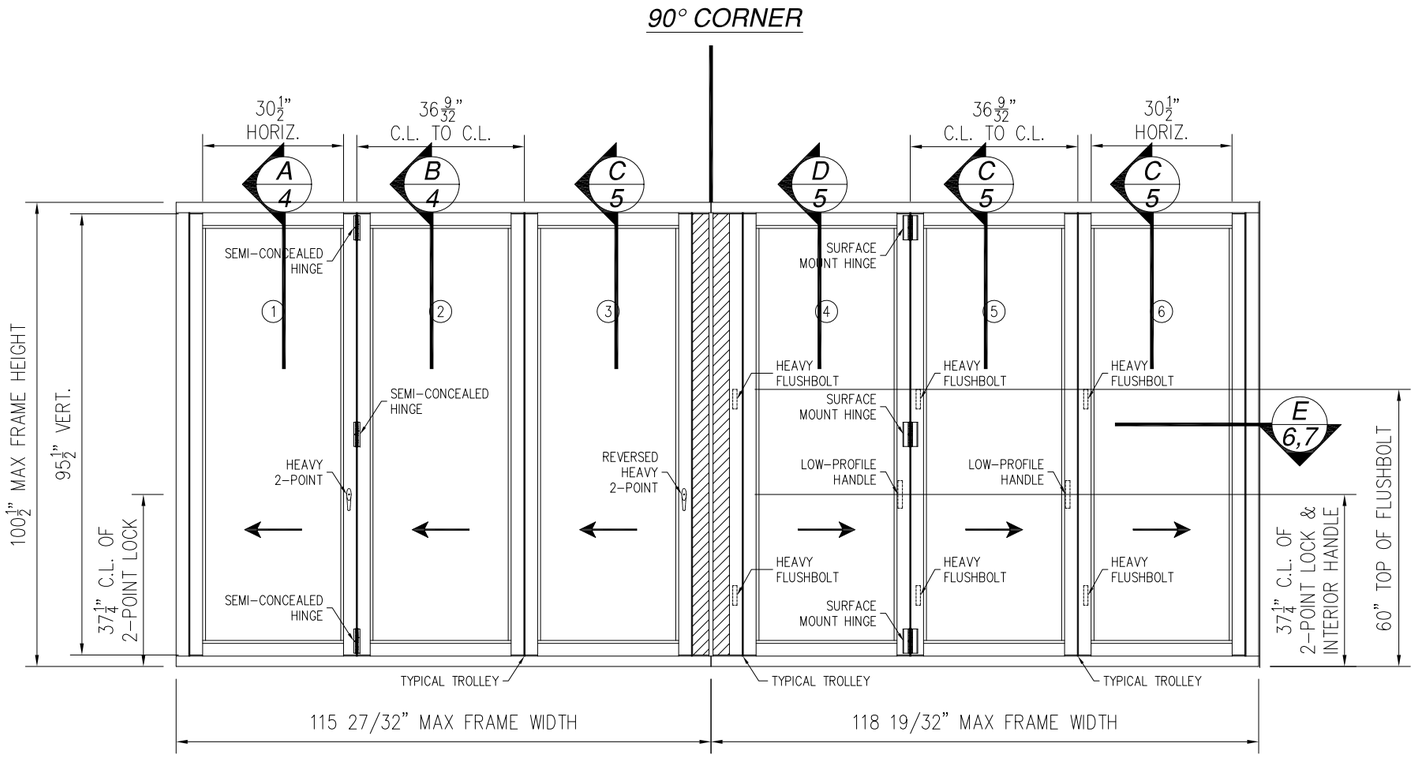


## SI 3350 FGW 3X8 PANEL 90° CORNER INFOLD

*EXTERIOR VIEW*

*UNLIMITED CONFIGURATIONS ARE APPROVED AS LONG AS INDIVIDUAL PANEL SIZE DOES NOT EXCEED MAXIMUM PANEL SIZE AND USES VERTICAL CONDITIONS AS SHOWN.*

| DESIGN PRESSURE RATING | IMPACT RATING |
|---|---|
| +60.0/-80.0PSF | LARGE AND SMALL MISSILE IMPACT |

*MISSILE LEVEL D, WIND ZONE 4*

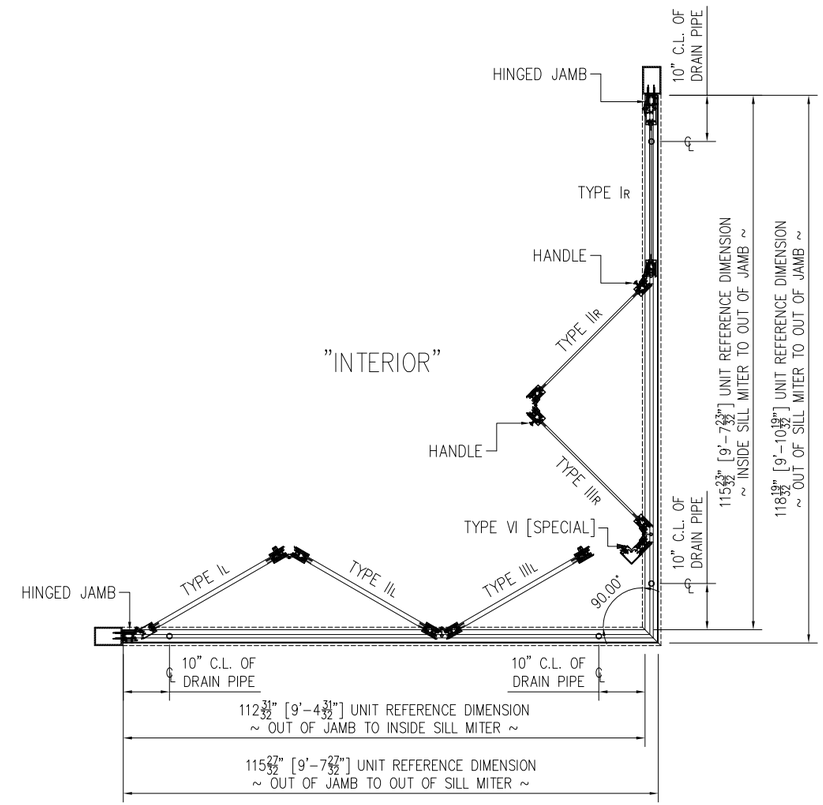


## SI 3350 FGW 3X8 PANEL 90° CORNER INFOLD

*PLAN VIEW*

*SIGNED: 10/12/2012*

| HARDWARE SCHEDULE |
|---|
| A. SEMI- CONCEALED HINGE BY SOLAR INNOVATIONS |
| B 2 POINT HANDLE & LOCK MS000487-XX BY SOLAR INNOVATIONS |
| C HEAVY FLUSH BOLTS MD000442-00-XX BY SOLAR INNOVATIONS |

© Copyright 2012 Solar Innovations, Inc. All Rights Reserved. These drawings are applicable only to the product specified herein, are the exclusive sole property of Solar Innovations, Inc., and are considered both confidential and proprietary. Any use of the information, design or drawings contained herein for any purpose whatsoever without the expressed written consent of a Solar Innovations, Inc. authorized individual is forbidden.

SOLAR INNOVATIONS, INC.
31 ROBERTS RD
PINE GROVE, PA 17963

SI 3350 FGW 3X8 PANEL 90° CORNER
NO POST INFOLD-IMPACT
ELEVATION

| DRAWN: | DWG NO. | REV |
|---|---|---|
| R.L. | 08-01846 | - |

| SCALE | DATE | SHEET |
|---|---|---|
| NTS | 09/19/12 | 2 OF 13 |

STATE OF TEXAS
LUIS R. LOMAS
101889
LICENSED
PROFESSIONAL ENGINEER

Luis R. Lomas P.E.
TX No.: 101889

| REVISIONS | | | |
|---|---|---|---|
| REV | DESCRIPTION | DATE | APPROVED |

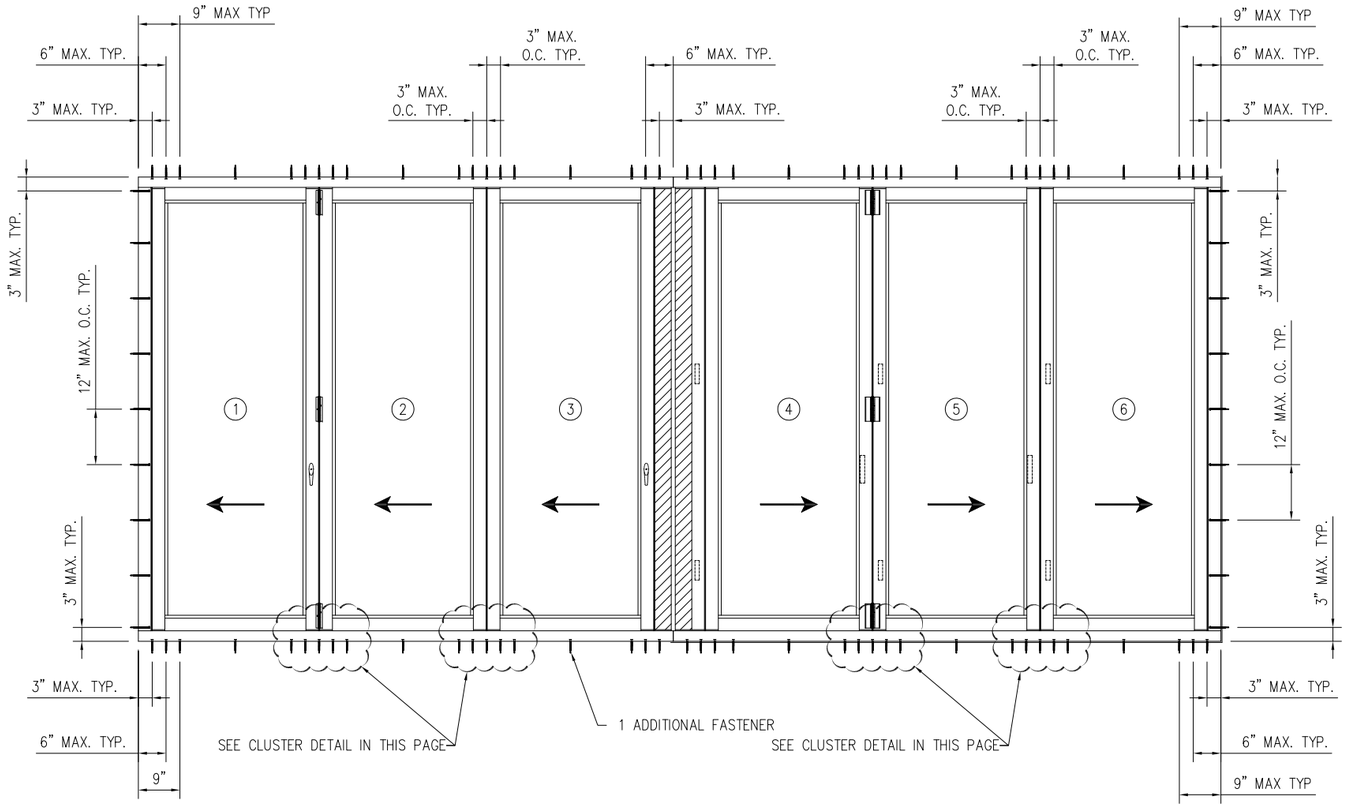


*ANCHOR LAYOUT*

*APPLICABLE TO ALL CONFIGURATIONS.*

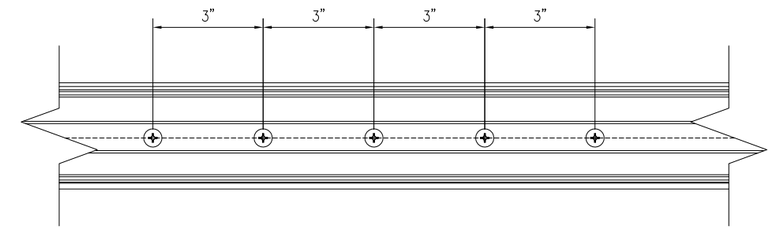


SILL AND HEAD
CLUSTER DETAIL

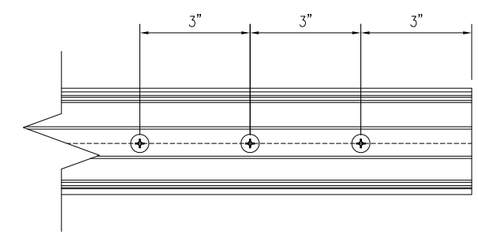


SILL AND HEAD
END DETAIL

*SIGNED: 10/12/2012*

© Copyright 2012 Solar Innovations, Inc. All Rights Reserved. These drawings are applicable only to the product specified herein, are the exclusive sole property of Solar Innovations, Inc., and are considered both confidential and proprietary. Any use of the information, design or drawings contained herein for any purpose whatsoever without the expressed written consent of a Solar Innovations, Inc. authorized individual is forbidden.

SOLAR INNOVATIONS, INC.
31 ROBERTS RD
PINE GROVE, PA 17963

SI 3350 FGW 3X8 PANEL 90° CORNER
NO POST INFOLD–IMPACT
ANCHORING LAYOUT

| DRAWN: | DWG NO. | REV |
|---|---|---|
| R.L. | 08–01846 | – |

| SCALE | DATE | SHEET |
|---|---|---|
| NTS | 09/19/12 | 3 OF 13 |

Luis R. Lomas P.E.
TX No.: 101889

| REVISIONS | | | |
|---|---|---|---|
| REV | DESCRIPTION | DATE | APPROVED |

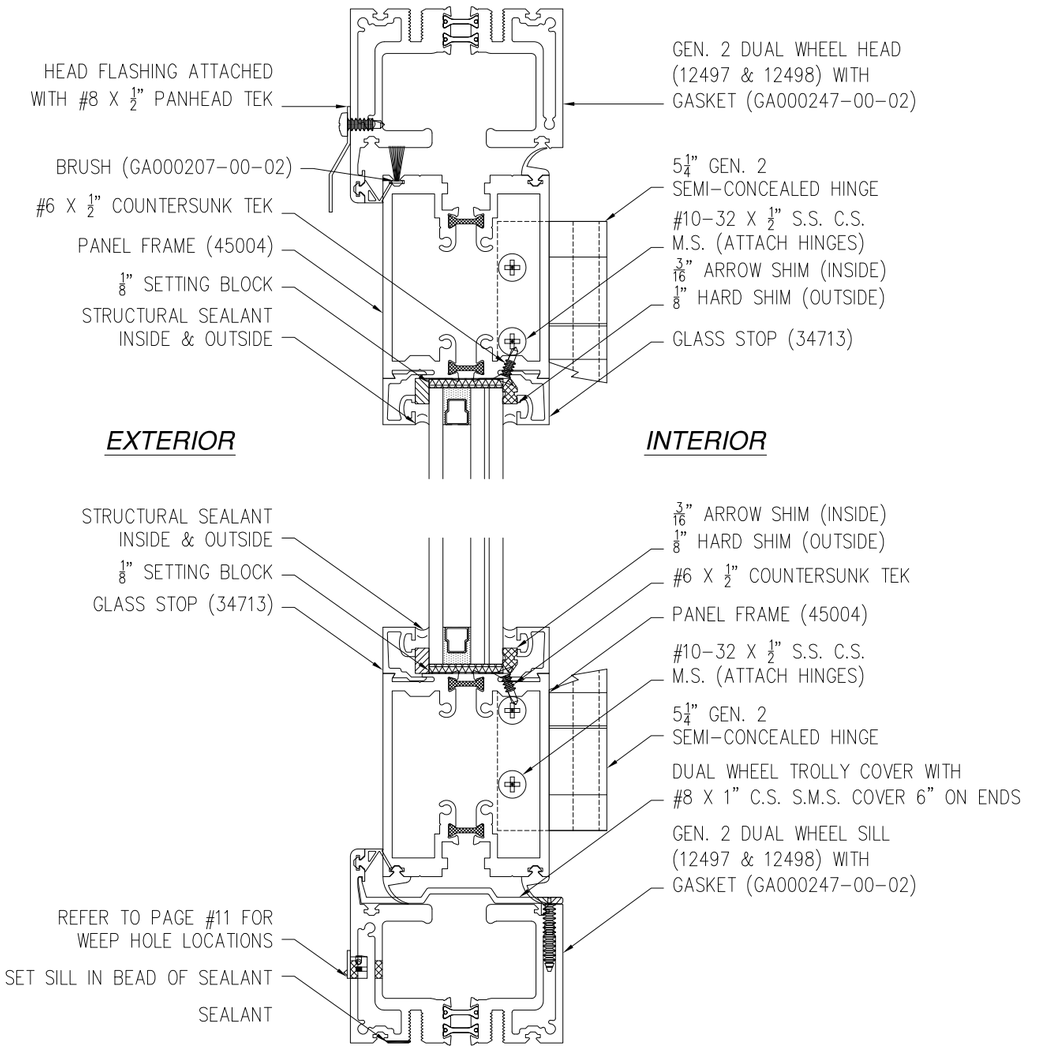


A/4 VERTICAL CROSS SECTION
WET GLAZED

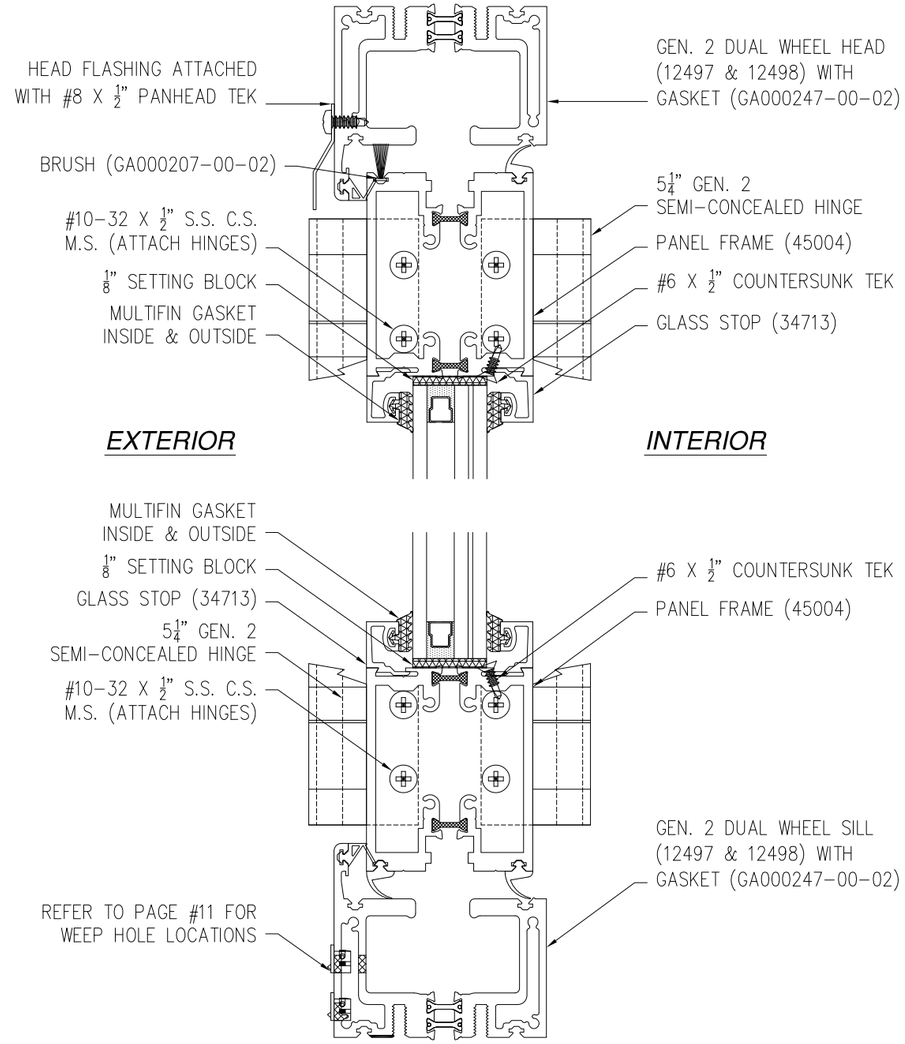


B/4 VERTICAL CROSS SECTION
DRY GLAZED

SIGNED: 10/12/2012

© Copyright 2012 Solar Innovations, Inc. All Rights Reserved. These drawings are applicable only to the product specified herein, are the exclusive sole property of Solar Innovations, Inc., and are considered both confidential and proprietary. Any use of the information, design or drawings contained herein for any purpose whatsoever without the expressed written consent of a Solar Innovations, Inc. authorized individual is forbidden.

SOLAR INNOVATIONS, INC.
31 ROBERTS RD
PINE GROVE, PA 17963

SI 3350 FGW 3X8 PANEL 90° CORNER
NO POST INFOLD-IMPACT
VERTICAL CROSS SECTIONS

| DRAWN: | DWG NO. | REV |
|---|---|---|
| R.L. | 08-01846 | – |
| SCALE NTS | DATE 09/19/12 | SHEET 4 OF 13 |

STATE OF TEXAS
LUIS R. LOMAS
101889
LICENSED
PROFESSIONAL ENGINEER

Luis R. Lomas P.E.
TX No.: 101889

| REVISIONS | | | |
|---|---|---|---|
| REV | DESCRIPTION | DATE | APPROVED |

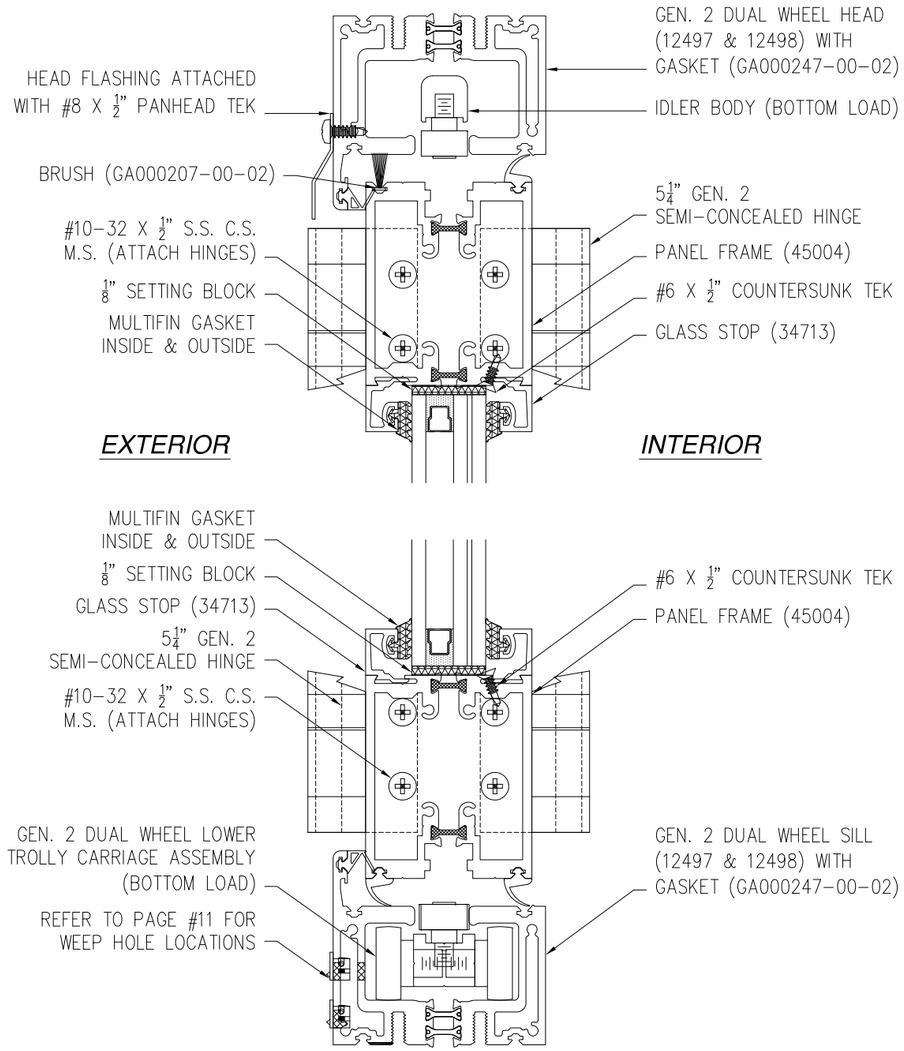


C/5 VERTICAL CROSS SECTION
DRY GLAZED BOTTOM LOAD

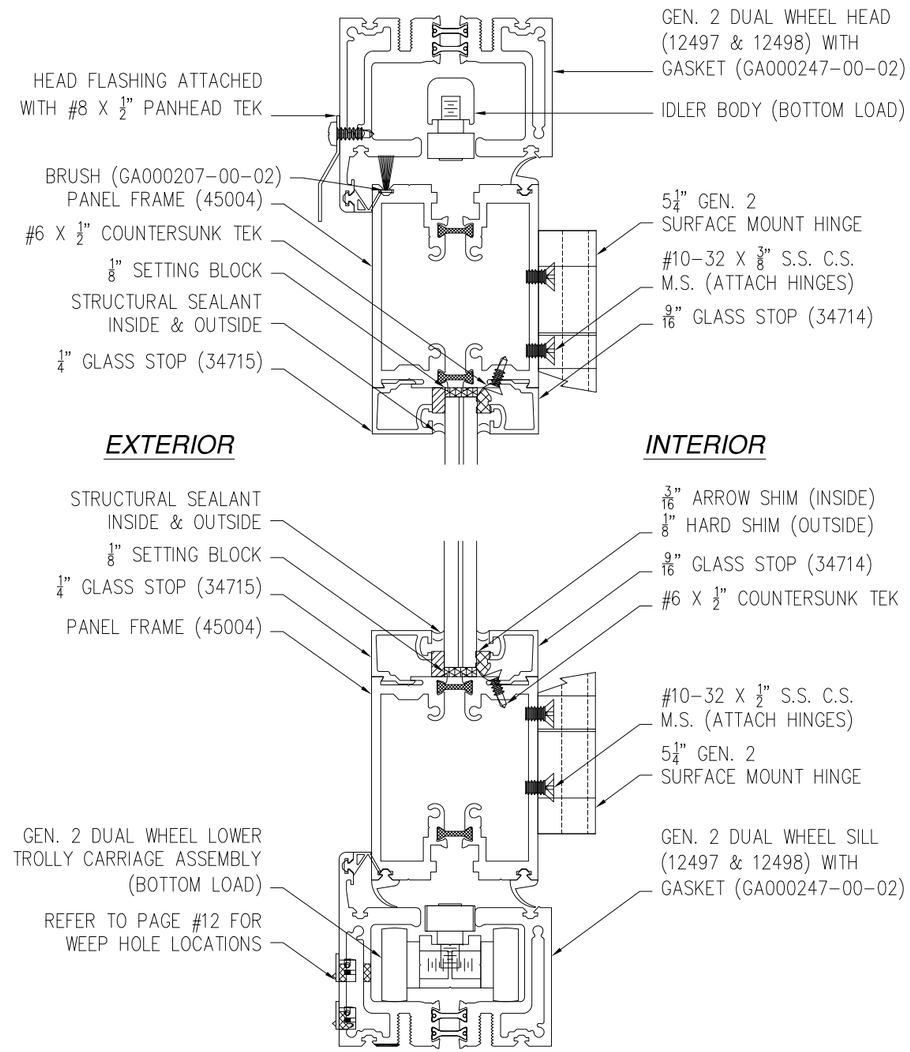


D/5 VERTICAL CROSS SECTION
WET GLAZED BOTTOM LOAD

SIGNED: 10/12/2012

SOLAR INNOVATIONS, INC.
31 ROBERTS RD
PINE GROVE, PA 17963

SI 3350 FGW 3X8 PANEL 90° CORNER
NO POST INFOLD-IMPACT
VERTICAL CROSS SECTIONS

| DRAWN: | DWG NO. | REV |
|---|---|---|
| R.L. | 08-01846 | – |
| SCALE NTS | DATE 09/19/12 | SHEET 5 OF 13 |

STATE OF TEXAS
LUIS R. LOMAS
101889
LICENSED
PROFESSIONAL ENGINEER

Luis R. Lomas P.E.
TX No.: 101889

| REVISIONS | | | |
|---|---|---|---|
| REV | DESCRIPTION | DATE | APPROVED |

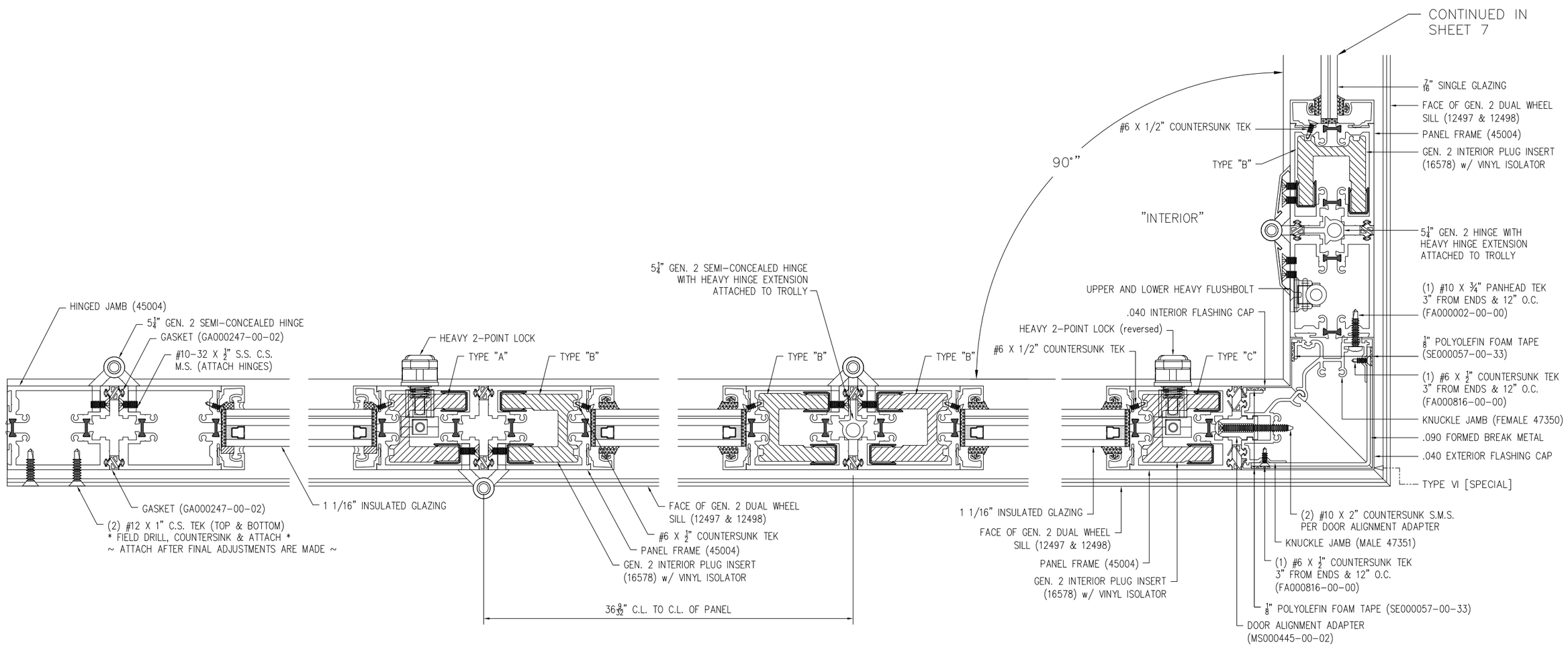


E/6 *HORIZONTAL CROSS SECTION*

*SIGNED: 10/12/2012*

© Copyright 2012 Solar Innovations, Inc. All Rights Reserved. These drawings are applicable only to the product specified herein, are the exclusive sole property of Solar Innovations, Inc., and are considered both confidential and proprietary. Any use of the information, design or drawings contained herein for any purpose whatsoever without the expressed written consent of a Solar Innovations, Inc. authorized individual is forbidden.

SOLAR INNOVATIONS, INC.
31 ROBERTS RD
PINE GROVE, PA 17963

SI 3350 FGW 3X8 PANEL 90° CORNER
NO POST INFOLD-IMPACT
HORIZONTAL CROSS SECTIONS

| DRAWN: | DWG NO. | REV |
|---|---|---|
| R.L. | 08-01846 | – |
| SCALE NTS | DATE 09/19/12 | SHEET 6 OF 13 |

STATE OF TEXAS
LUIS R. LOMAS
101889
LICENSED
PROFESSIONAL ENGINEER

Luis R. Lomas P.E.
TX No.: 101889

| REVISIONS | | | |
|---|---|---|---|
| REV | DESCRIPTION | DATE | APPROVED |

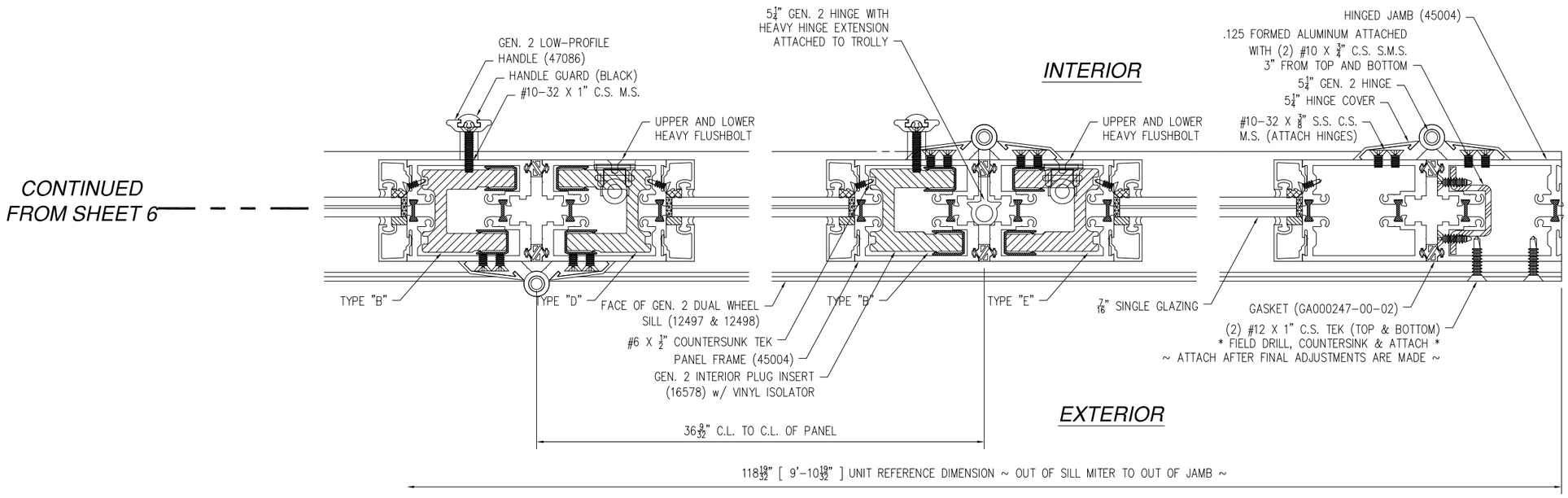


E/7 HORIZONTAL CROSS SECTION

SIGNED: 10/12/2012

© Copyright 2012 Solar Innovations, Inc. All Rights Reserved. These drawings are applicable only to the product specified herein, are the exclusive sole property of Solar Innovations, Inc., and are considered both confidential and proprietary. Any use of the information, design or drawings contained herein for any purpose whatsoever without the expressed written consent of a Solar Innovations, Inc. authorized individual is forbidden.

SOLAR INNOVATIONS, INC.
31 ROBERTS RD
PINE GROVE, PA 17963

SI 3350 FGW 3X8 PANEL 90° CORNER
NO POST INFOLD-IMPACT
HORIZONTAL CROSS SECTION & GLAZING DETAILS

| DRAWN: | DWG NO. | REV |
|---|---|---|
| R.L. | 08-01846 | – |

| SCALE | DATE | SHEET |
|---|---|---|
| NTS | 09/19/12 | 7 OF 13 |

STATE OF TEXAS
LUIS R. LOMAS
101889
LICENSED
PROFESSIONAL ENGINEER

Luis R. Lomas P.E.
TX No.: 101889

| REVISIONS | | | |
|---|---|---|---|
| REV | DESCRIPTION | DATE | APPROVED |

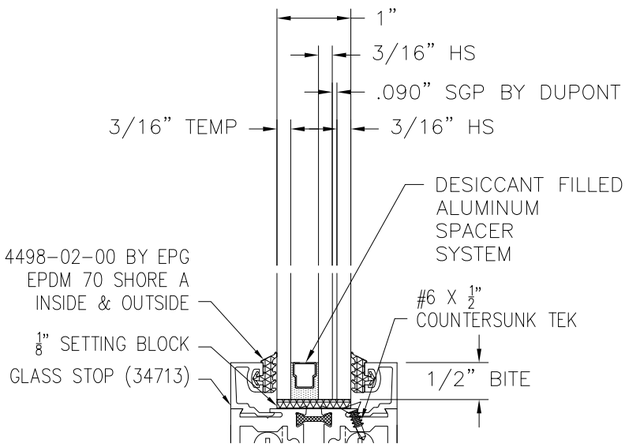


*GLAZING A*
*DRY GLAZING*

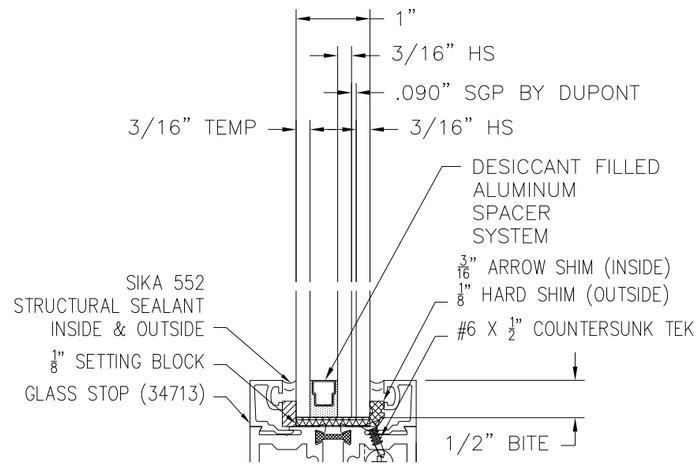


*GLAZING B*
*WET GLAZING*

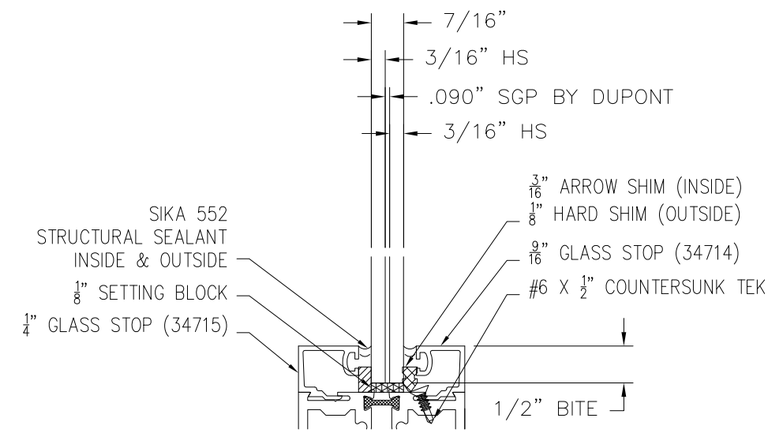


*GLAZING C*
*WET GLAZING*

*SIGNED: 10/12/2012*

© Copyright 2012 Solar Innovations, Inc. All Rights Reserved. These drawings are applicable only to the product specified herein, are the exclusive sole property of Solar Innovations, Inc., and are considered both confidential and proprietary. Any use of the information, design or drawings contained herein for any purpose whatsoever without the expressed written consent of a Solar Innovations, Inc. authorized individual is forbidden.

SOLAR INNOVATIONS, INC.
31 ROBERTS RD
PINE GROVE, PA 17963

SI 3350 FGW 3X8 PANEL 90° CORNER
NO POST INFOLD-IMPACT
GLAZING DETAILS

| DRAWN: | DWG NO. | REV |
|---|---|---|
| R.L. | 08-01846 | – |
| SCALE NTS | DATE 09/19/12 | SHEET 8 OF 13 |

Luis R. Lomas P.E.
TX No.: 101889

| REVISIONS | | | |
|---|---|---|---|
| REV | DESCRIPTION | DATE | APPROVED |

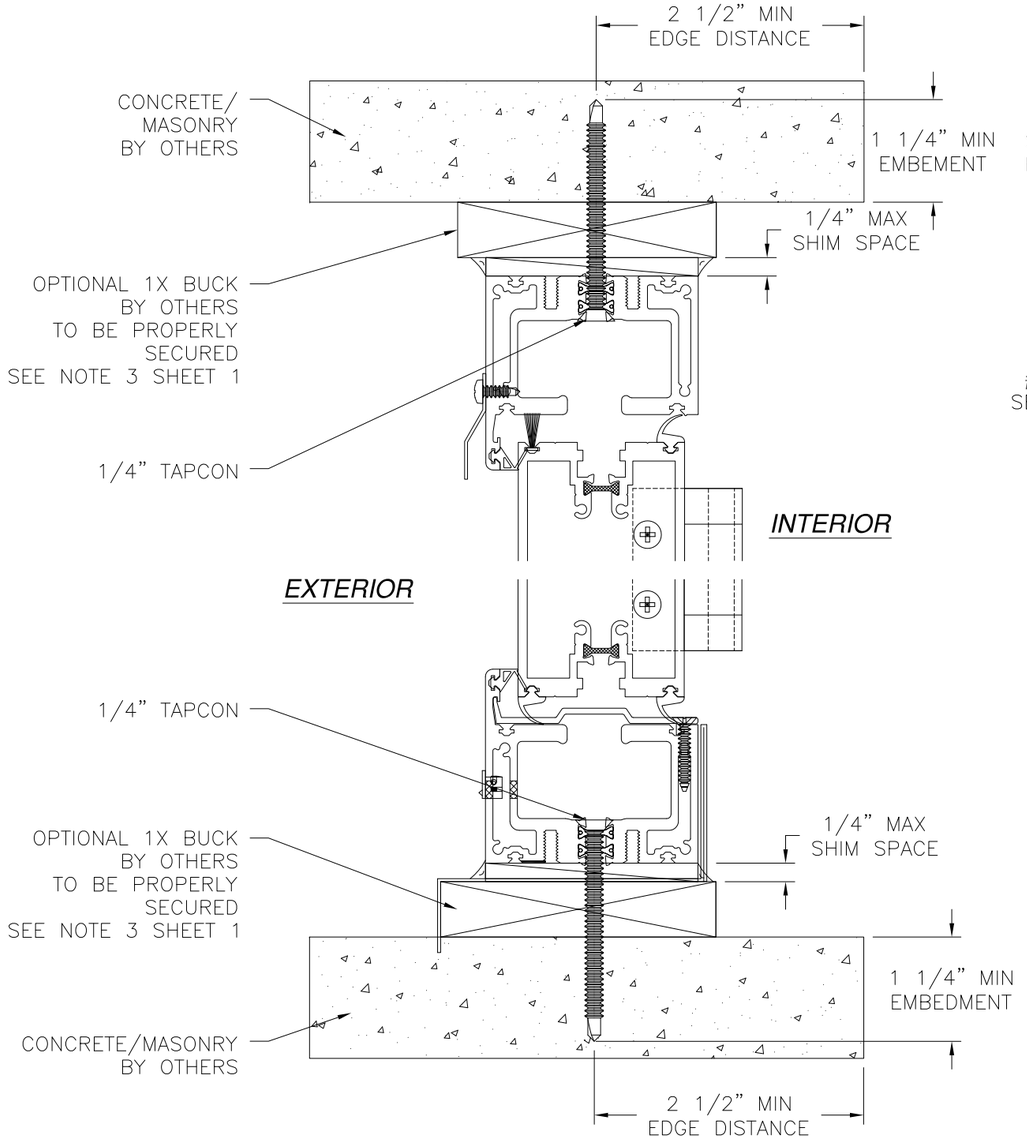


**VERTICAL CROSS SECTION**
*CONCRETE/MASONRY INSTALLATION*

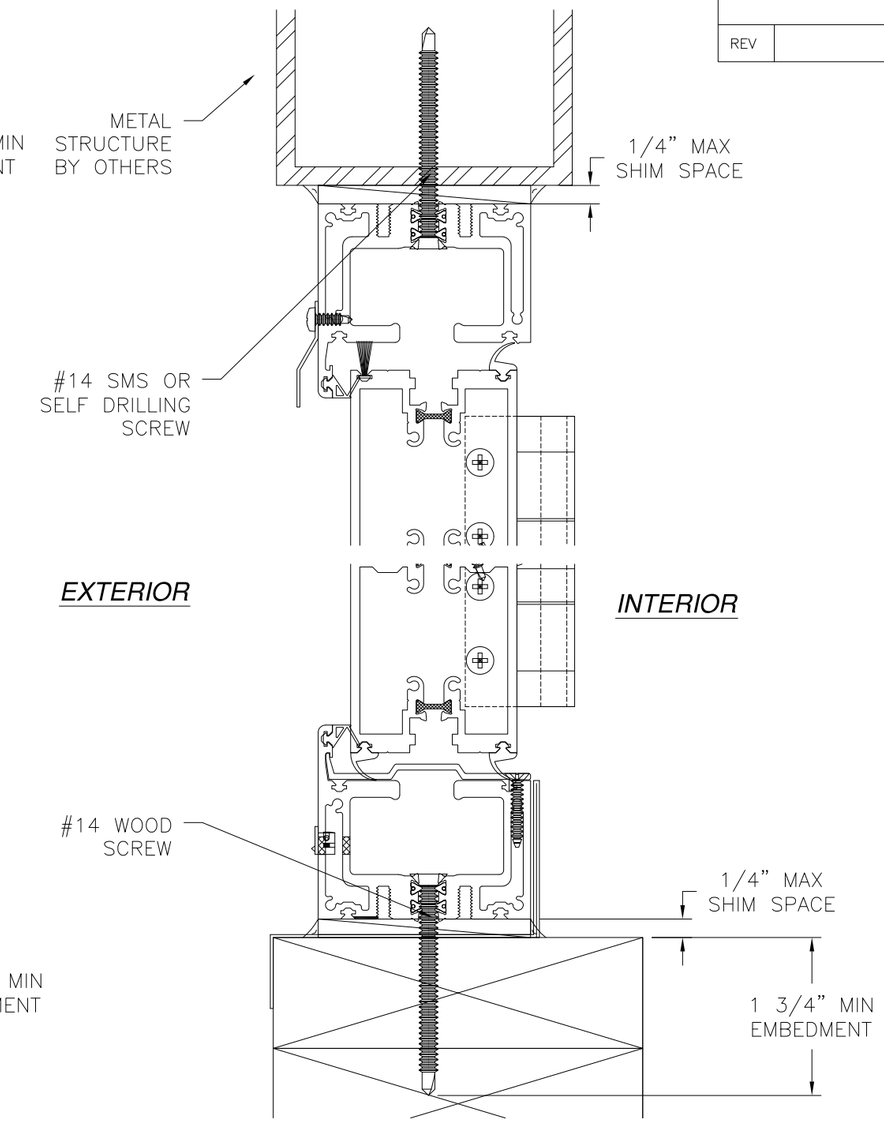


**VERTICAL CROSS SECTION**
*WOOD FRAMING OR 2X BUCK*
*OR METAL STRUCTURE INSTALLATION*

*NOTES:*
*INTERIOR AND EXTERIOR FINISHES, BY OTHERS, NOT SHOWN FOR CLARITY.*

*SIGNED: 10/12/2012*

© Copyright 2012 Solar Innovations, Inc. All Rights Reserved. These drawings are applicable only to the product specified herein, are the exclusive sole property of Solar Innovations, Inc., and are considered both confidential and proprietary. Any use of the information, design or drawings contained herein for any purpose whatsoever without the expressed written consent of a Solar Innovations, Inc. authorized individual is forbidden.

SOLAR INNOVATIONS, INC.
31 ROBERTS RD
PINE GROVE, PA 17963

SI 3350 FGW 3X8 PANEL 90° CORNER
NO POST INFOLD–IMPACT
INSTALLATION INSTRUCTIONS

| DRAWN: | DWG NO. | REV |
|---|---|---|
| R.L. | 08–01846 | – |
| SCALE NTS | DATE 09/19/12 | SHEET 9 OF 13 |

STATE OF TEXAS
LUIS R. LOMAS
101889
LICENSED
PROFESSIONAL ENGINEER

Luis R. Lomas P.E.
TX No.: 101889

| REVISIONS | | | |
|---|---|---|---|
| REV | DESCRIPTION | DATE | APPROVED |

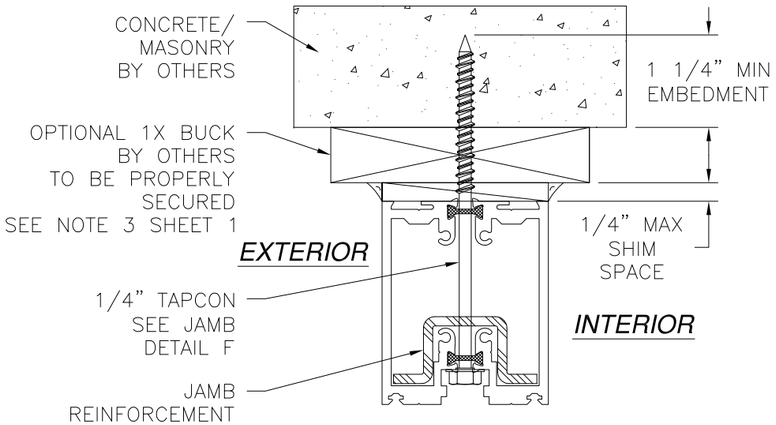


**JAMB INSTALLATION DETAIL**
*CONCRETE/MASONRY*
*TALL PROFILE WITH REINFORCEMENT*

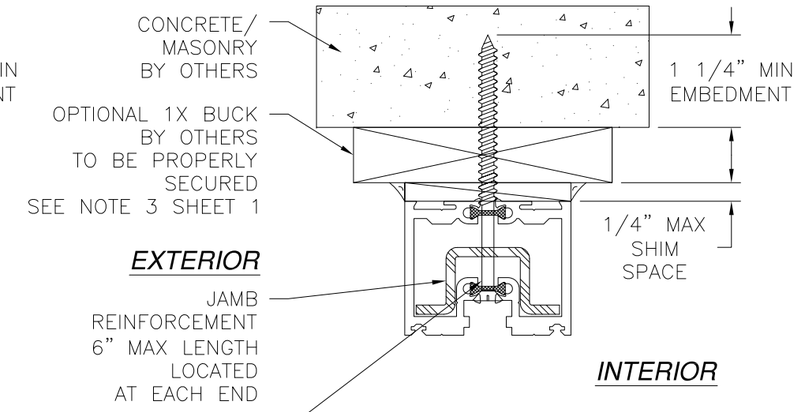


**JAMB INSTALLATION DETAIL**
*CONCRETE/MASONRY*
*SHORT PROFILE WITH REINFORCEMENT*

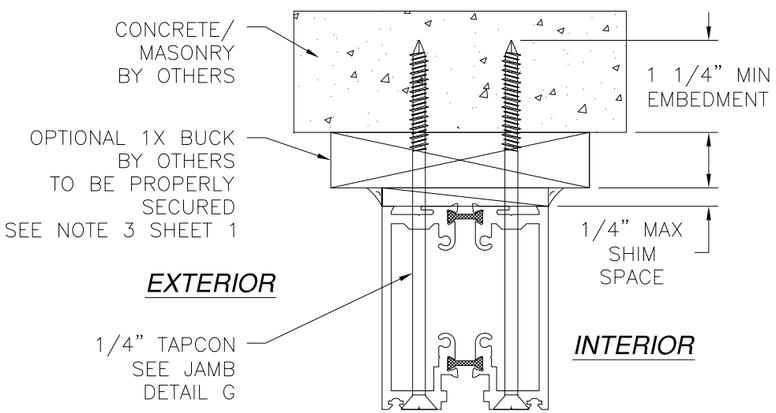


**JAMB INSTALLATION DETAIL**
*CONCRETE/MASONRY*
*TALL PROFILE NO REINFORCEMENT*

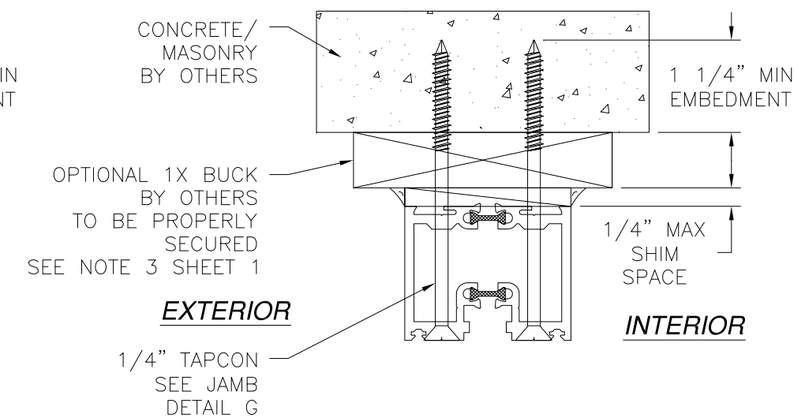


**JAMB INSTALLATION DETAIL**
*CONCRETE/MASONRY*
*SHORT PROFILE NO REINFORCEMENT*

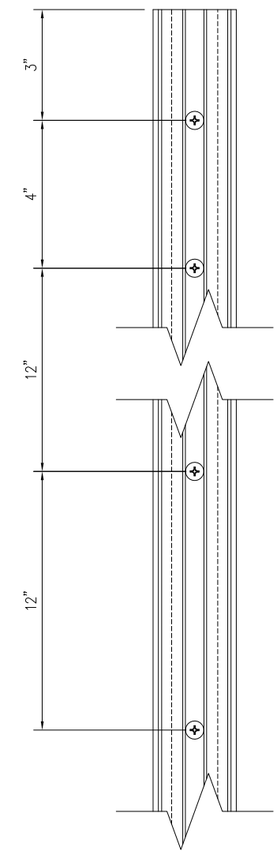


**JAMB INSTALLATION DETAIL F**
*JAMB WITH REINFORCEMENT*

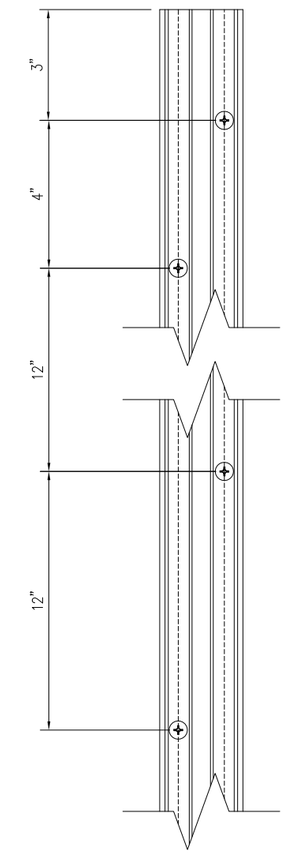


**JAMB INSTALLATION DETAIL G**
*JAMB WITHOUT REINFORCEMENT*

© Copyright 2012 Solar Innovations, Inc. All Rights Reserved. These drawings are applicable only to the product specified herein, are the exclusive sole property of Solar Innovations, Inc., and are considered both confidential and proprietary. Any use of the information, design or drawings contained herein for any purpose whatsoever without the expressed written consent of a Solar Innovations, Inc. authorized individual is forbidden.

SOLAR INNOVATIONS, INC.
31 ROBERTS RD
PINE GROVE, PA 17963

SI 3350 FGW 3X8 PANEL 90° CORNER
NO POST INFOLD–IMPACT
INSTALLATION INSTRUCTIONS

| DRAWN: | DWG NO. | REV |
|---|---|---|
| R.L. | 08–01846 | – |
| SCALE NTS | DATE 09/19/12 | SHEET 10 OF 13 |

STATE OF TEXAS
LUIS R. LOMAS
101889
LICENSED
PROFESSIONAL ENGINEER

Luis R. Lomas P.E.
TX No.: 101889

| REVISIONS | | | |
|---|---|---|---|
| REV | DESCRIPTION | DATE | APPROVED |

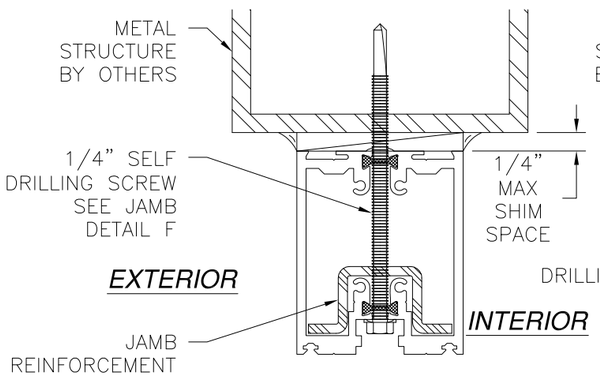


**JAMB INSTALLATION DETAIL**
*METAL STRUCTURE*
*TALL PROFILE WITH REINFORCEMENT*

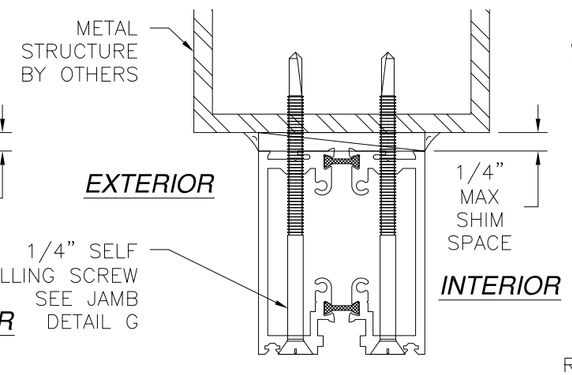


**JAMB INSTALLATION DETAIL**
*METAL STRUCTURE*
*TALL PROFILE NO REINFORCEMENT*

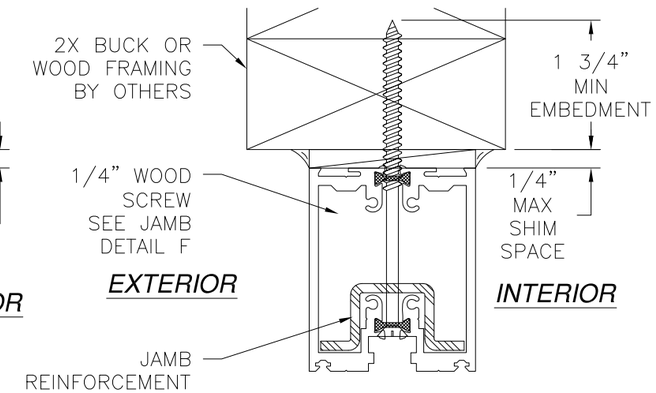


**JAMB INSTALLATION DETAIL**
*2X BUCK OR WOOD FRAMING*
*TALL PROFILE WITH REINFORCEMENT*

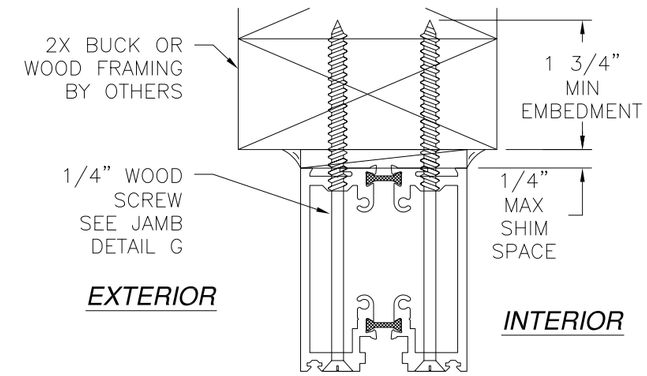


**JAMB INSTALLATION DETAIL**
*2X BUCK OR WOOD FRAMING*
*TALL PROFILE NO REINFORCEMENT*

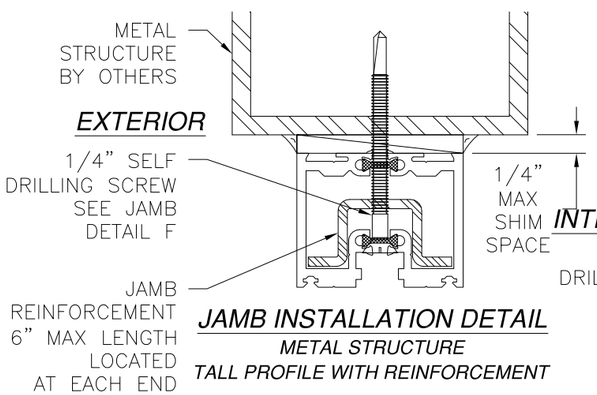


**JAMB INSTALLATION DETAIL**
*METAL STRUCTURE*
*TALL PROFILE WITH REINFORCEMENT*

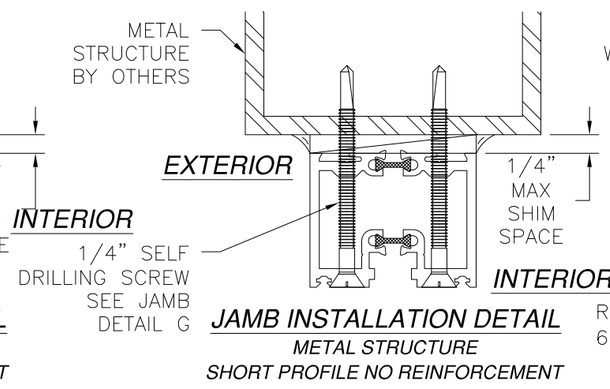


**JAMB INSTALLATION DETAIL**
*METAL STRUCTURE*
*SHORT PROFILE NO REINFORCEMENT*

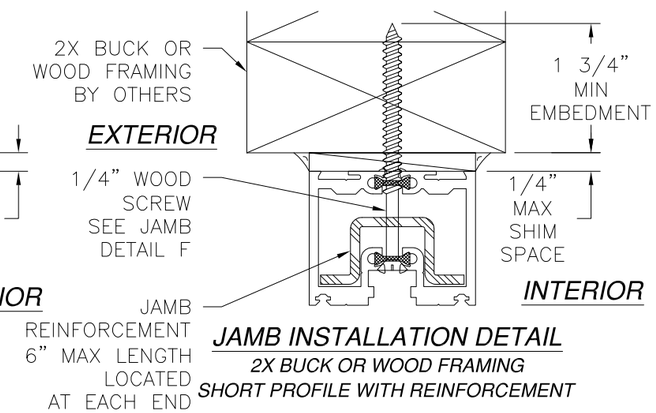


**JAMB INSTALLATION DETAIL**
*2X BUCK OR WOOD FRAMING*
*SHORT PROFILE WITH REINFORCEMENT*

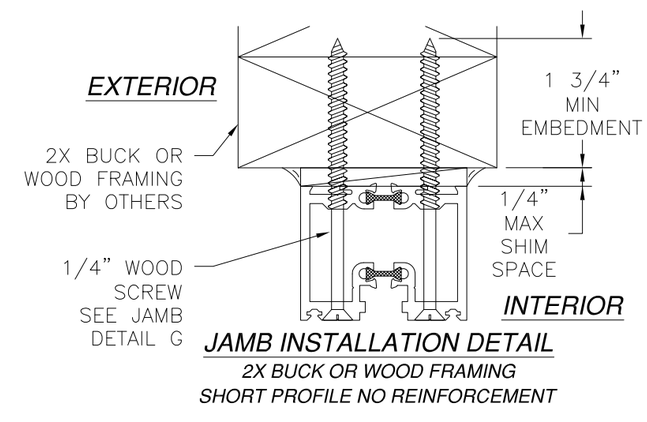


**JAMB INSTALLATION DETAIL**
*2X BUCK OR WOOD FRAMING*
*SHORT PROFILE NO REINFORCEMENT*

*SIGNED: 10/12/2012*

© Copyright 2012 Solar Innovations, Inc. All Rights Reserved. These drawings are applicable only to the product specified herein, are the exclusive sole property of Solar Innovations, Inc., and are considered both confidential and proprietary. Any use of the information, design or drawings contained herein for any purpose whatsoever without the expressed written consent of a Solar Innovations, Inc. authorized individual is forbidden.

SOLAR INNOVATIONS, INC.
31 ROBERTS RD
PINE GROVE, PA 17963

SI 3350 FGW 3X8 PANEL 90° CORNER
NO POST INFOLD–IMPACT
INSTALLATION INSTRUCTIONS

| DRAWN: | DWG NO. | REV |
|---|---|---|
| R.L. | 08–01846 | – |
| SCALE NTS | DATE 09/19/12 | SHEET 11 OF 13 |

Luis R. Lomas P.E.
TX No.: 101889

| REVISIONS | | | |
|---|---|---|---|
| REV | DESCRIPTION | DATE | APPROVED |

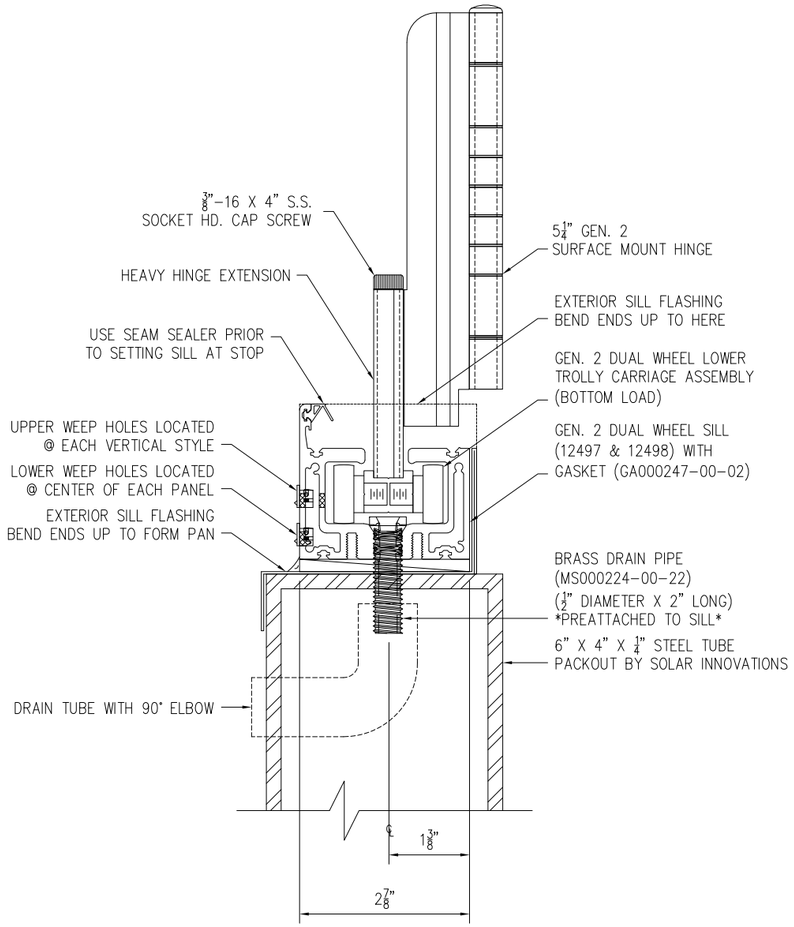


*WEEP HOLE, DRAIN PIPE AND HINGE EXENSION DETAIL*

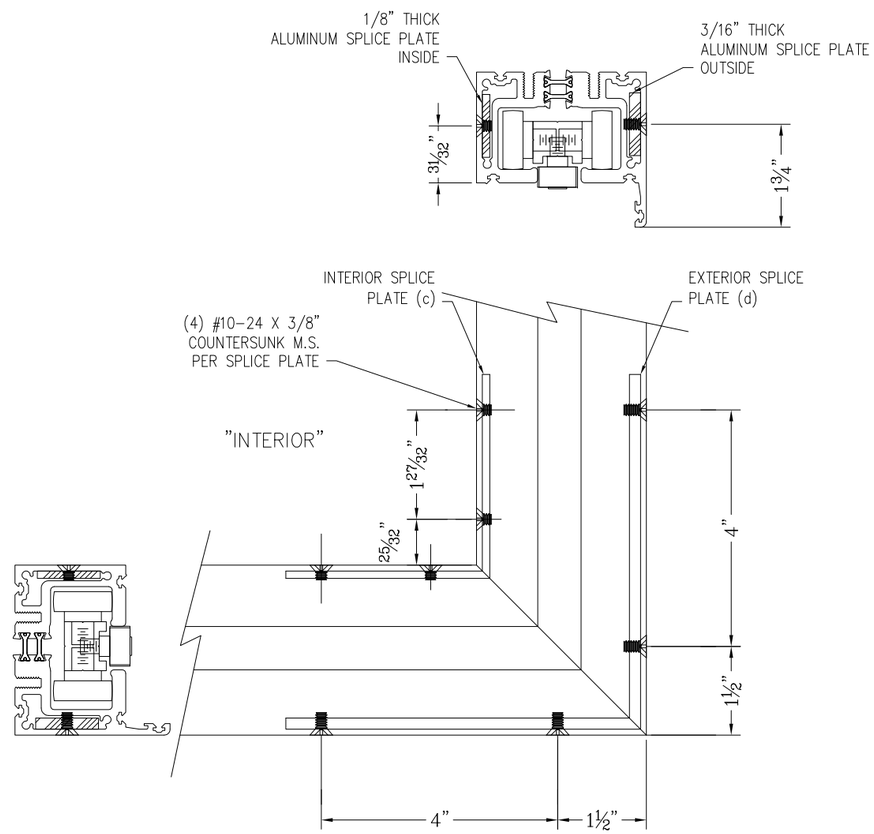


*SPLICE PLATES INSTALLATION DETAIL*

SIGNED: 10/12/2012

© Copyright 2012 Solar Innovations, Inc. All Rights Reserved. These drawings are applicable only to the product specified herein, are the exclusive sole property of Solar Innovations, Inc., and are considered both confidential and proprietary. Any use of the information, design or drawings contained herein for any purpose whatsoever without the expressed written consent of a Solar Innovations, Inc. authorized individual is forbidden.

SOLAR INNOVATIONS, INC.
31 ROBERTS RD
PINE GROVE, PA 17963

SI 3350 FGW 3X8 PANEL 90° CORNER
NO POST INFOLD-IMPACT
WEEP DETAILS

| DRAWN: | DWG NO. | REV |
|---|---|---|
| R.L. | 08-01846 | – |
| SCALE NTS | DATE 09/19/12 | SHEET 12 OF 13 |

Luis R. Lomas P.E.
TX No.: 101889

| REVISIONS | | | |
|---|---|---|---|
| REV | DESCRIPTION | DATE | APPROVED |

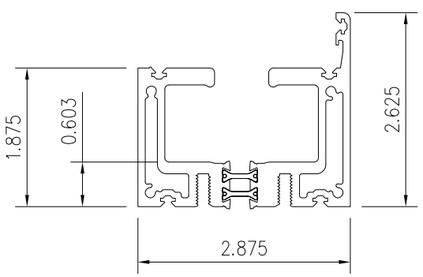


1 DUAL WHEEL HEAD / SILL

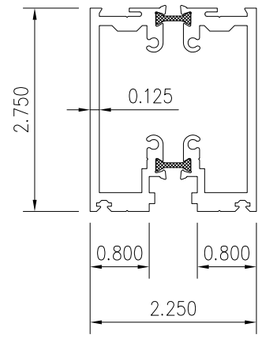


2 FRAME

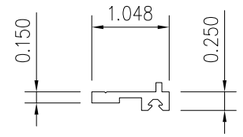


3 FRAME CAP

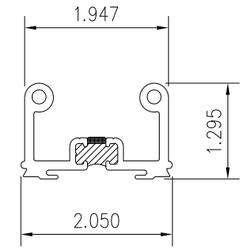


4 FRAME LUG

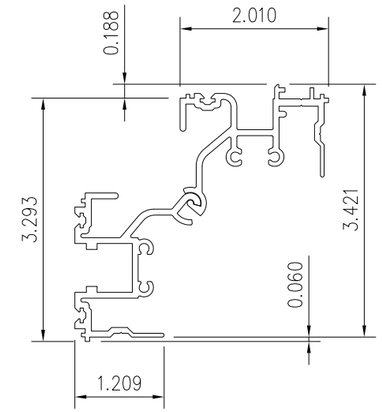


5 KNUCKLE JAMB

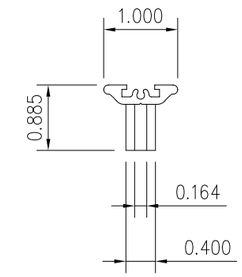


6 LOW-PROFILE HANDLE

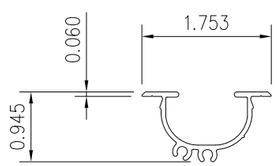


7 RECESSED / FLUSH HANDLE

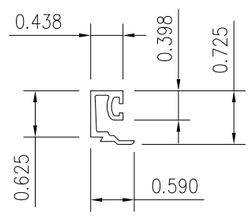


8 1" GLASS STOP

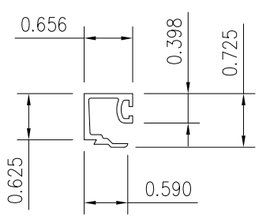


9 9/16" GLASS STOP

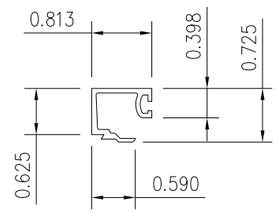


10 1/4" GLASS STOP

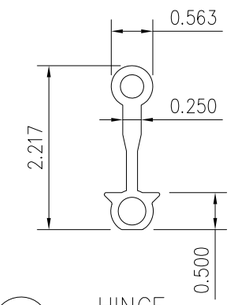


11 HINGE EXTENSION

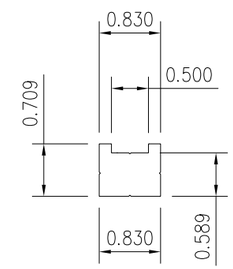


12 TROLLY BODY

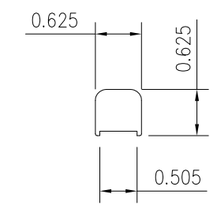


13 IDLER BODY

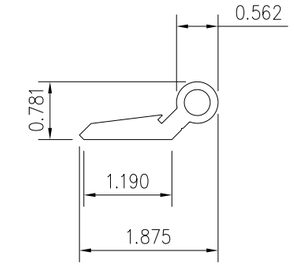


14 5 1/4" HYBRID HINGE

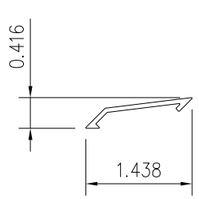


15 5 1/4" HYBRID HINGE COVER

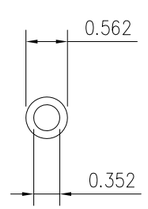


16 HINGE BARREL

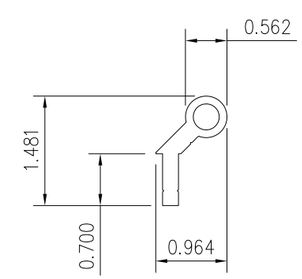


17 5 1/4" SEMI-CONCEALED HINGE

SIGNED: 10/12/2012

© Copyright 2012 Solar Innovations, Inc. All Rights Reserved. These drawings are applicable only to the product specified herein, are the exclusive sole property of Solar Innovations, Inc., and are considered both confidential and proprietary. Any use of the information, design or drawings contained herein for any purpose whatsoever without the expressed written consent of a Solar Innovations, Inc. authorized individual is forbidden.

SOLAR INNOVATIONS, INC.
31 ROBERTS RD
PINE GROVE, PA 17963

SI 3350 FGW 3X8 PANEL 90° CORNER
NO POST INFOLD-IMPACT
COMPONENTS

| DRAWN: | DWG NO. | REV |
|---|---|---|
| R.L. | 08-01846 | – |

| SCALE | DATE | SHEET |
|---|---|---|
| NTS | 09/19/12 | 13 OF 13 |

Luis R. Lomas P.E.
TX No.: 101889