SERIES FG-5100T HURRICANE RESISTANT THERMAL STOREFRONT SYSTEM FOR USE IN HURRICANE ZONES REQUIRING LARGE & SMALL MISSILE IMPACT PROTECTION (WET & DRY GLAZED).

GENERAL NOTES:

1. SERIES FG-5100T HURRICANE RESISTANT THERMAL STOREFRONT SYSTEM, SHOWN ON THIS PRODUCT EVALUATION DOCUMENT (P.E.D.) HAS BEEN VERIFIED FOR COMPLIANCE IN ACCORDANCE WITH THE 2006 EDITION OF THE INTERNATIONAL BUILDING CODE, (I.B.C) AND INTERNATIONAL RESIDENTIAL CODE, (I.R.C) WITH THE 2006 TEXAS REVISIONS, EFFECTIVE JANUARY 1, 2008.

   DESIGN WIND LOADS SHALL BE DETERMINED AS PER SECTION 1609 OF THE INTERNATIONAL BUILDING CODE, FOR A BASIC WIND SPEED AS REQUIRED BY THE JURISDICTION WHERE PRODUCT WILL BE INSTALLED, AND FOR A DIRECTIONALITY FACTOR Kd = 0.85, IN ACCORDANCE WITH ASCE 7-05 STANDARD, AND SHALL NOT EXCEED THE DESIGN PRESSURE RATING INDICATED ON NOTE 2.

   IN ORDER TO VERIFY THAT ANCHORS ON THIS P.E.D., AS TESTED, WERE NOT OVERSTRESSED, A 33% INCREASE IN ALLOWABLE STRESS FOR WIND LOADS WAS NOT USED IN THEIR ANALYSIS. FASTENERS SPACING TO WOOD HAS BEEN DETERMINED IN ACCORDANCE WITH N.D.S. 2005.

   THIS PRODUCT'S ADEQUACY FOR IMPACT AND CYCLIC RESISTANCE HAS BEEN VERIFIED IN ACCORDANCE WITH SECTIONS 1609.1.4 AND R301.2.1.2 OF THE ABOVE MENTIONED CODES RESPECTIVELY, AS PER FLORIDA BUILDING CODE HIGH VELOCITY HURRICANE ZONES PROTOCOLS TAS-201, TAS-202, TAS-203, PER ARCHITECTURAL TESTING, INC. LABORATORY REPORT # 91212.01-401-18, CONSTRUCTION CONSULTING LABORATORY INTERNATIONAL REPORT # CCLI-14-115 AND AS PER SUBMITTED STRUCTURAL CALCULATIONS, PERFORMED AS PER SECTION 1604 OF THE ABOVE MENTIONED BUILDING CODE.

2. MAXIMUM DESIGN PRESSURE RATING FOR THIS WINDOW WALL SYSTEM SHALL BE AS SHOWN ON SHEETS 5, 6, 7 & 8.
3. THIS PRODUCT WILL NOT REQUIRE A HURRICANE PROTECTION DEVICE.
4. THIS PRODUCT IS APPROVED FOR WATER INFILTRATION (SEE SCHEDULE ON SHEET 7).
5. SERIES FG-5100T HURRICANE RESISTANT THERMAL STOREFRONT SYSTEM SHALL COMPLY WITH SECTION 2406 OF THE INTERNATIONAL BUILDING CODE.
6. PROVIDE 3/8" MAX. LOAD BEARING SHIM (TYP.), WHEN ALLOWED BY THIS DRAWING.
7. WOOD BUCKS BY OTHERS, MUST BE ANCHORED PROPERLY TO TRANSFER LOADS TO THE BUILDING STRUCTURE. WOOD BUCKS MUST BE SOUTHERN PINE, G = 0.55.
8. REMAINING COMPONENTS FOR THIS WINDOW WALL SYSTEM SHALL BE AS INDICATED ON BILL OF MATERIALS, SHEET 3 OF THIS DRAWING.
9. ALL ALUMINUM EXTRUSIONS IN CONTACT WITH STEEL, CONCRETE, GROUT FILLED CONCRETE BLOCK AND WOOD SHALL COMPLY WITH SECTION 6.7 OF THE ALUMINUM DESIGN MANUAL 2005 EDITION.
10. SHOP DRAWINGS PREPARED BASED ON THIS T.D.I REPORT AND TAKING INTO ACCOUNT THE SPECIFIC JOB CONDITIONS, SHALL BE SUBMITTED TO THE BUILDING OFFICIAL AS PART OF THE PERMIT DOCUMENTS.
11. SUBSTRATE MATERIAL NOTED ON THIS DRAWING AS EXISTING BY OTHERS, POURED CONCRETE, GROUT FILLED CONCRETE BLOCK AND WOOD MUST WITHSTAND THE LOADS IMPOSED BY THIS PRODUCT.
12. THIS PRODUCT'S INSTALLATION SHALL COMPLY WITH ALL SPECS INDICATED IN THIS DRAWING PLUS ANY BUILDING AND ZONING REGULATIONS PROVIDED BY THE JURISDICTION WHERE PERMIT IS APPLIED TO.
13. (a) THIS P.E.D. PREPARED BY THIS ENGINEER IS GENERIC AND DOES NOT PROVIDE INFORMATION FOR A SITE SPECIFIC PROJECT; i.e. WHERE THE SITE CONDITIONS DEVIATE FROM THE P.E.D.

    (b) CONTRACTOR TO BE RESPONSIBLE FOR THE SELECTION, PURCHASE AND INSTALLATION INCLUDING LIFE SAFETY OF THIS PRODUCT, BASED ON THIS P.E.D., PROVIDED HE/SHE DOES NOT DEVIATE FROM THE CONDITIONS DETAILED ON THIS DOCUMENT. CONSTRUCTION SAFETY AT SITE IS THE CONTRACTOR'S RESPONSIBILITY.

    (c) THIS P.E.D. WILL BE CONSIDERED INVALID IF ALTERED BY ANY MEANS.

    (d) SITE SPECIFIC PROJECTS SHALL BE PREPARED BY A PROFESSIONAL ENGINEER OR ARCHITECT WHICH WILL BECOME THE ENGINEER OF RECORD (E.O.R.) FOR THE PROJECT AND WHO WILL BE RESPONSIBLE FOR THE PROPER USE OF THE P.E.D. ENGINEER OF RECORD, ACTING AS A DELEGATED ENGINEER TO THE P.E.D. ENGINEER, SHALL SUBMIT TO THIS LATTER THE SITE SPECIFIC DRAWINGS FOR REVIEW.

    (e) ORIGINAL P.E.D. SHALL BEAR THE DATE AND ORIGINAL SEAL AND SIGNATURE OF THE PROFESSIONAL ENGINEER OF RECORD THAT PREPARED IT.
14. PRODUCT MANUFACTURE'S LABEL SHALL BE LOCATED ON A READILY VISIBLE LOCATION AT PRODUCT IN ACCORDANCE WITH TEXAS DEPARTMENT OF INSURANCE REQUIREMENTS. ONE LABEL SHALL BE PLACED FOR EVERY OPENING.

INDEX:

SHEET 1: GENERAL NOTES, INDEX AND INSTRUCTIONS.
SHEET 2: COMPONENTS.
SHEET 3: BILL OF MATERIALS.
SHEET 4: OLDCASTLE BUILDINGENVELOPE FG-5100T FLUSH GLAZED ALUM STOREFRONT SYSTEM.
SHEET 5: TYPICAL GLAZING DETAILS & GLASS SCHEDULE.
SHEET 6: MAXIMUM DESIGN PRESSURE RATING SCHEDULE FOR A GIVEN GLASS TYPE AND GLASS PANEL DIMENSIONS.
SHEET 7: MAXIMUM DESIGN PRESSURE RATING FOR STANDARD AND JAMB MULLIONS.
SHEET 8: MAXIMUM DESIGN PRESSURE RATING FOR STANDARD & JAMB MULLION CONNECTIONS W/ 4" & 2 3/4" MIN. E.D. EXCEPT AS NOTED.
SHEET 9: HEAD CONNECTIONS DETAILS.
SHEET 10: SILL AND BOTTOM CONNECTION DETAILS FOR CORNER MULLIONS (SIDE VIEWS).
SHEET 11: MULLION & HORIZONTAL DETAILS.
SHEET 12: ISOMETRIC FOR JAMB MULLION DETAIL AT HORIZONTALS, HEAD & SILL.

INSTRUCTIONS:

STEP 1: DETERMINE DESIGN WIND LOAD REQUIREMENTS BASED ON WIND VELOCITY, BUILDING HEIGHT, WIND ZONE, USING APPLICABLE ASCE 7 STANDARD.

STEP 2: GO TO SCHEDULE ON SHEET 6 TO DETERMINE MAXIMUM DESIGN PRESSURE RATING (psf) OF DESIRED GLASS SIZE BASED ON GLASS PANEL DIMENSIONS.

STEP 3: DETERMINE MAXIMUM MULLION SPAN "L"(FT) FOR A GIVEN MULLION EFFECTIVE SPACING "b", ON SCHEDULE ON SHEET 7, AND SELECT ANCHOR OPTION W/ DESIGN PRESSURE RATING EQUAL OR GREATER THAN DESIGN LOAD SPECIFIED IN STEP 1 USING SCHEDULE ON SHEET 8.

STEP 4: THE LOWEST VALUE OF DESIGN PRESSURE RATING RESULTING FROM STEPS 2, 3, 4 AND 5 SHALL APPLY TO THE ENTIRE SYSTEM.

THIS DRAWING SHALL ONLY BE USED TO OBTAIN PERMITS UNDER THE TEXAS DEPARTMENT OF INSURANCE JURISDICTION

TEXAS DEPARTMENT OF INSURANCE - 2006

SERIES FG-5100T
HURRICANE RESISTANT
THERMAL STOREFRONT SYSTEM

DRAWN BY: F.R.L.
DATE 10/16/14
14-076 DRAWING No
SHEET 1 OF 12

Oldcastle BuildingEnvelope®
803 AIRPORT RD. TERRELL, TX 75160
www.OldcastleBE.com-Phone 800-869-4567

REV. No.	DESCRIPTION	DATE	REV. No.	DESCRIPTION	DATE
1	TITLE	12/8/14			

WALTER A. TILLIT Jr P.E.
PROFESSIONAL ENGINEER
6355 N.W 36 STREET, STE. 305
VIRGINIA GARDENS, FL 33166
PHONE(305) 871-1530 FAX (305) 871-1531
TEXAS LIC. # 90691
FIRM REGISTRATION # F-13790

STATE OF TEXAS
WALTER A. TILLIT JR.
90691
PROFESSIONAL ENGINEER

12/8/14

P.E. SEAL/SIGNATURE/DATE

SERIES FG-5100T HURRICANE RESISTANT THERMAL STOREFRONT SYSTEM

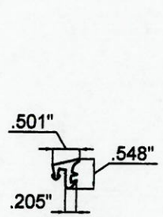

1 GASKET FG-1133

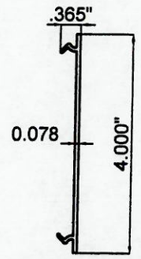

2 VINYL FILLER FG-2188

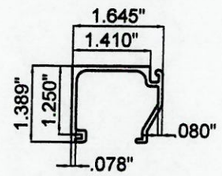

3 GLASS STOP FG-5177

4 SPACER GASKET FG-5185

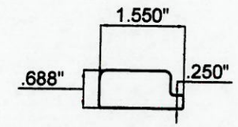

5 SETTING BLOCK FG-5186

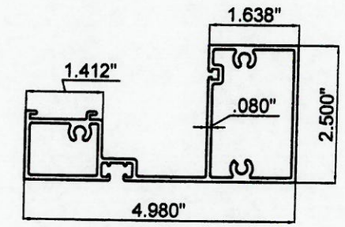

6 HEAD / SILL FG-5213

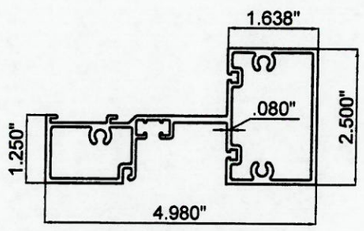

7 INT. HORIZONTAL FG-5214

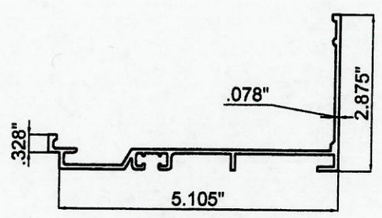

8 SILL FLASHING FG-5215

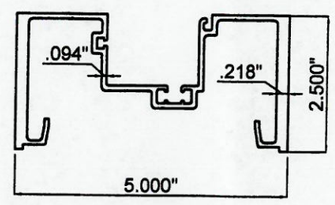

9 MULLION FG-5216

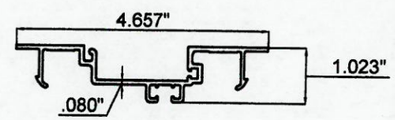

10 MULLION FILLER FG-5217

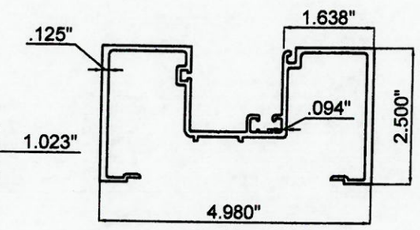

11 JAMB MULLION FG-5218

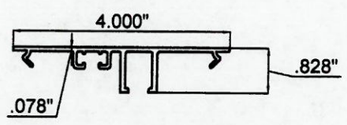

12 JAMB ANCHOR PLATE FG-5219-01

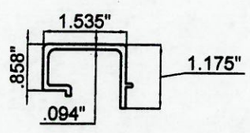

13 SETTING CHAIR FG-5226

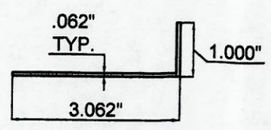

14 SILL END DAM FG-5000-FP11

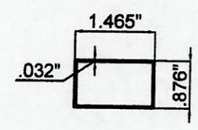

15 WATER DIVERTER FG5100-FP-5

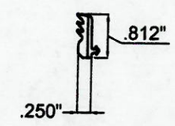

24 DRY GLAZE GASKET FG-5949

TEXAS DEPARTMENT OF INSURANCE - 2006

SERIES FG-5100T
HURRICANE RESISTANT
THERMAL STOREFRONT SYSTEM

DRAWN BY: F.R.L.
DATE 10/16/14

Oldcastle BuildingEnvelope™
803 AIRPORT RD. TERRELL, TX 75160
www.OldcastleBE.com-Phone 800-889-4567

DRAWING No 14-076

SHEET 2 OF 12

REV. No.	DESCRIPTION	REV. No.	DESCRIPTION	DATE

WALTER A. TILLIT Jr P.E.
PROFESSIONAL ENGINEER
6355 N.W 36 STREET, STE. 305
VIRGINIA GARDENS, FL 33166
PHONE(305) 871-1530 FAX (305) 871-1531
TEXAS LIC. # 90691
FIRM REGISTRATION # F-13790

P.E. SEAL/SIGNATURE/DATE

BILL OF MATERIALS

ITEM No.	PART NUMBER	DESCRIPTION	DIMENSIONS	MATERIAL	MANUFACTURER	NOTES
1.	FG-1133	EXTERIOR GLAZING GASKET	.197 SPACE	EPDM	EPG	FOR 1 5/16" OR 5/8" GLAZING
2.	FG-2188	FLAT FILLER @ JAMB	.780 X 4.66 X .080	RIGID PVC	Oldcastle BE	USE @ TYP. JAMB AND BETWEEN JAMB ANCHORS
3.	FG-5177	GLASS STOP	1.25 X 1.41 X .078	6063-T6 ALUMINUM	Oldcastle BE	
4.	FG-5185	SPACER GASKET	.25 SPACE	SILICONE	EPG	
5.	FG-5186	SETTING BLOCK	3/4" X 1/4" X 4"	SILICONE	VARIES	
6.	FG-5213	HEAD/SILL	2.50 X 4.98 X .080	6063-T6 ALUMINUM	Oldcastle BE	
7.	FG-5214	INTERMEDIATE HORIZONTAL	2.50 X 4.98 X .080	6063-T6 ALUMINUM	Oldcastle BE	
8.	FG-5215	SUB-SILL FLASHING	2.875 X 5.307 X .078	6063-T6 ALUMINUM	Oldcastle BE	
9.	FG-5216	MULLION	2.50 X 5.00 X .094 X .218"	6063-T6 ALUMINUM	Oldcastle BE	
10.	FG-5217	OPEN BACK MULLION FILLER	.780 X 4.66 X .08	6063-T6 ALUMINUM	Oldcastle BE	
11.	FG-5218	JAMB MULLION	2.50 X 5.00 X .094 X .125"	6063-T6 ALUMINUM	Oldcastle BE	
12.	FG-5219-01	JAMB ANCHOR PLATE	0.828" X 4" X .078" 6" LONG	6063-T6 ALUMINUM	Oldcastle BE	LOCATED AT JAMB ANCHORS
13.	FG-5226	SETTING CHAIR	1.269 X 1.535 X .094	6063-T5 ALUMINUM	Oldcastle BE	CUT 4" LONG
14.	FG5000-FP-11	SILL FLASHING END DAM	3.062 X 1 X .062	6063-T5 ALUMINUM	Oldcastle BE	5.25" LONG
15.	FG5100-FP-5	WATER DIVERTER	.876 X 1.465 X .032	RIGID PVC	Oldcastle BE	CUT 1.562 LONG & LOCATE @ EACH END
16.	FS-8	SPLINE ASSEMBLY SCREW	#14 X 1 HHSTS	STEEL	VARIES	
17.	FS-54	END DAM ASSEMBLY SCREW	#10 - 24 X 3/8" USPFH	STEEL	VARIES	
18.	BACKER ROD	USED AT PERIMETER	FILL SPACE	POLY	VARIES	
19.	995	STRUCTURAL SILICONE	FILL SPACE AT GLAZING	SILICONE	DOW CORNING	
20.	TREMCO PROGLAZE II SSG	STRUCTURAL SILICONE	FILL SPACE AT GLAZING	SILICONE	TREMCO	
21.	795	NON STRUCTURAL SILICONE	PERIMETER	SILICONE	DOW CORNING	
22.	TREMCO SPECTRUM 2	NON STRUCTURAL SILICONE	PERIMETER SEAL	SILICONE	TREMCO	
23.	SM-5601	JOINT SEALANT TAPE		ISOCRYL	SCHNEE MOOREHEAD	
24.	FG-5949	DRY GLAZED GASKET	0.25 X 0.813"	SPONGE & EPDM	EPG	
25.	SU 311-19T	STRUCTURAL THERMAL BARRIER POLYMER	FILL SPACE ON EXTRUSIONS, SEE SHEET 2	POLYAMIDE	AZON	

TEXAS DEPARTMENT OF INSURANCE - 2006

SERIES FG-5100T
HURRICANE RESISTANT
THERMAL STOREFRONT SYSTEM

DRAWN BY: F.R.L
DATE 10/16/14

Oldcastle BuildingEnvelope
803 AIRPORT RD. TERRELL TX 75160
www.OldcastleBE.com • Phone 800-669-4567

14-076
DRAWING No

SHEET 3 OF 12

WALTER A. TILLIT Jr P.E.
PROFESSIONAL ENGINEER
6355 N.W 36 STREET, STE. 305
VIRGINIA GARDENS, FL 33166
PHONE(305) 871-1530 FAX (305) 871-1531
TEXAS LIC. # 90691
FIRM REGISTRATION # F-13790

P.E. SEAL/SIGNATURE/DATE

SERIES FG-5100T HURRICANE RESISTANT THERMAL STOREFRONT SYSTEM

N.T.S.

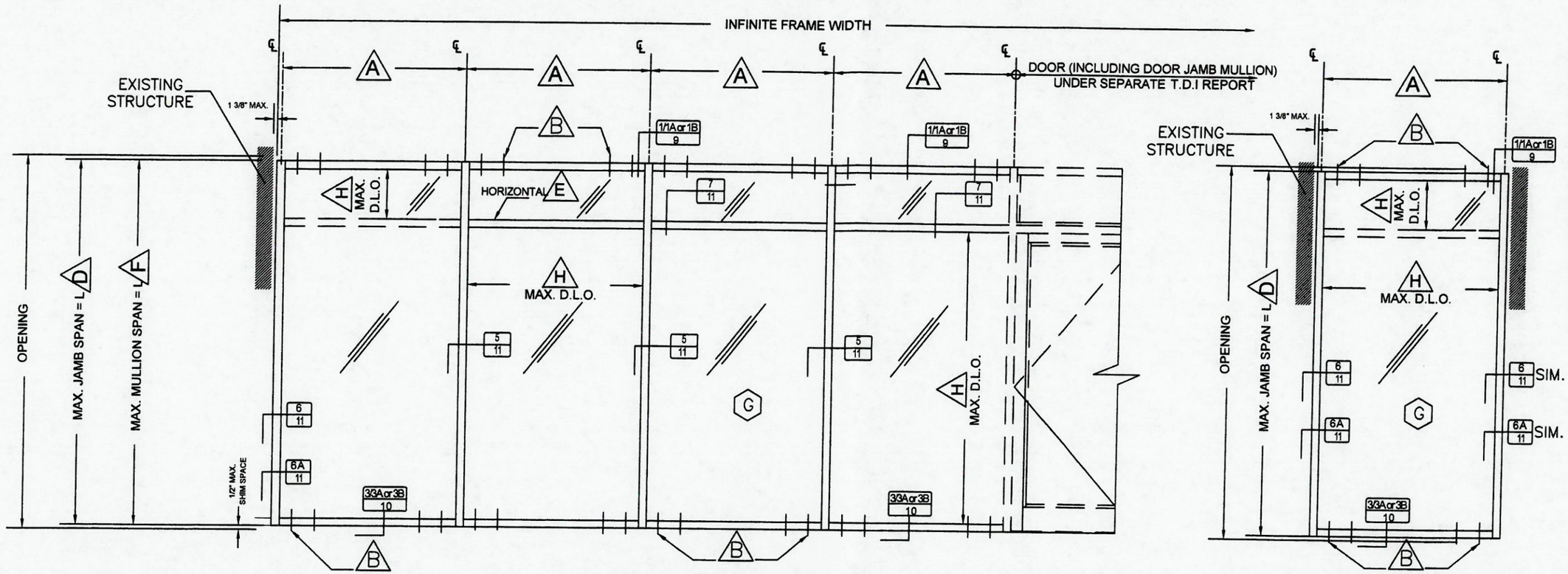

FOOT NOTES:

- (A) FOR MAXIMUM MULLION SPACING SEE SHEET 7.
- (B) FOR HEAD AND SILL FASTENERS QUANTITY FOR JAMB & STANDARD MULLION, SEE SHEET 8.
- (D) SEE SHEET 7 FOR MAXIMUM DESIGN PRESSURE RATING FOR JAMB NOT CONNECTED TO EXISTING STRUCTURE.
- (E) USE OF HORIZONTALS (SEE SECTION 7/11) IS LIMITED TO 5'-0" MAX. SPAN.
- (F) FOR MAXIMUM STANDARD MULLION SPAN SEE SHEET 7.
- (G) FOR GLAZING DETAILS AND GLASS SCHEDULE SEE SHEET 5.
- (H) FOR MAXIMUM D.L.O. DESIGN PRESSURE RATING FOR GLASS, SEE SCHEDULE ON SHEET 6.

TEXAS DEPARTMENT OF INSURANCE - 2006

SERIES FG-5100T
HURRICANE RESISTANT
THERMAL STOREFRONT SYSTEM

Oldcastle BuildingEnvelope
803 AIRPORT RD. TERRELL, TX 75160
www.Oldcastle.BE.com - Phone 800-869-4567

DRAWN BY: F.R.L
DATE: 10/16/14
DRAWING No: 14-076
SHEET 4 OF 12

WALTER A. TILLIT Jr P.E.
PROFESSIONAL ENGINEER
6355 N.W 36 STREET, STE. 305
VIRGINIA GARDENS, FL 33166
PHONE(305) 871-1531 FAX (305) 871-1530
TEXAS LIC. # 90691
FIRM REGISTRATION # F-13790

P.E. SEAL/SIGNATURE/DATE

7/4/16

TYPICAL GLAZING DETAIL OPTIONS & LIMITATIONS

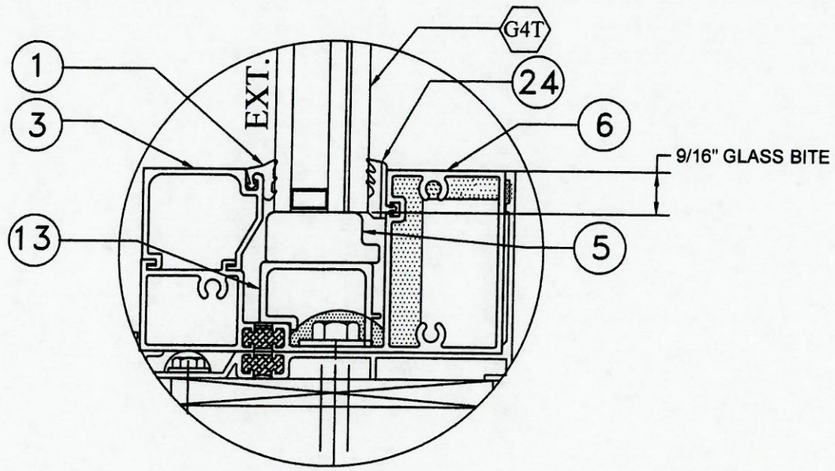

DRY GLAZED

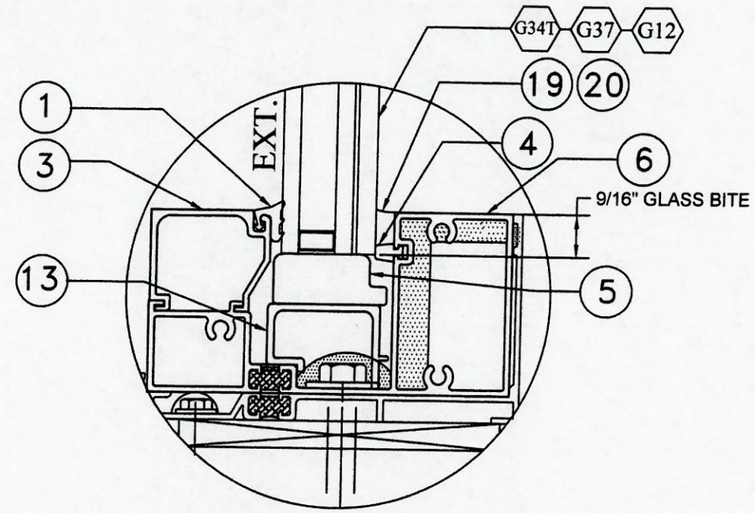

WET GLAZED

GLASS SCHEDULE

GLASS LABEL	GLASS COMPOSITION	MANUFACTURER NAME	MAXIMUM D.L.O.	MAXIMUM TOTAL SQ. FT. OF DLO
G4T	1 5/16" INSULATED LAMINATED GLASS CONSISTING OF EXTERIOR 1/4" TEMP 1/2" AIR SPACE 1/4" H.S. GLASS, AND A 0.090" SENTRYGLAS COMPOSITE INTERLAYER– 1/4" H.S.	DUPONT	SEE SCHEDULE ON SHEET 6	41.12

* WHEN INSTALLING A DOOR IN THIS SYSTEM, GLASS PANELS ADJACENT TO DOOR MUST BE GLAZED WITH SAFETY GLASS PER GLASS TYPE G12.

GLASS SCHEDULE

GLASS LABEL	GLASS COMPOSITION	MANUFACTURER NAME	MAXIMUM D.L.O.	MAXIMUM TOTAL SQ. FT. OF DLO
G34T	1 5/16" INSULATED LAMINATED GLASS CONSISTING OF EXTERIOR 1/4" H.S. 1/2" AIR SPACE 1/4" H.S. GLASS, AND A 0.090" SAFLEX PVB INTERLAYER– 1/4" H.S.	OBE	SEE SCHEDULE ON SHEET 6	30.04
G12 *	1 5/16" INSULATED LAMINATED GLASS CONSISTING OF EXTERIOR 1/4" TEMP 1/2" AIR SPACE 1/4" H.S. GLASS, AND A 0.075" SAFLEX CP/STORMGLASS COMPOSITE INTERLAYER– 1/4" H.S.	EASTMAN CHEMICAL COMPANY	SEE SCHEDULE ON SHEET 6	41.12
G37	1 5/16" INSULATED LAMINATED GLASS CONSISTING OF EXTERIOR 1/4" H.S 1/2" AIR SPACE 1/4" H.S. GLASS, AND A 0.075" EASTMAN CHEMICAL CO. SAFLEX CP/STORMGLASS INTERLAYER– 1/4" H.S.	EASTMAN CHEMICAL COMPANY	SEE SCHEDULE ON SHEET 6	38.33

TEXAS DEPARTMENT OF INSURANCE – 2006

SERIES FG-5100T
HURRICANE RESISTANT
THERMAL STOREFRONT SYSTEM

Oldcastle BuildingEnvelope
803 AIRPORT RD. TERRELL, TX 75160
www.OldcastleBE.com-Phone 800-869-4567

DRAWN BY: F.R.L.
DATE 10/16/14
DRAWING No 14-076
SHEET 5 OF 12

REV. No	DESCRIPTION	DATE	REV. No	DESCRIPTION	DATE

WALTER A. TILLIT Jr P.E.
PROFESSIONAL ENGINEER
6355 N.W 36 STREET, STE. 305
VIRGINIA GARDENS, FL 33166
PHONE(305) 871-1530 FAX (305) 871-1531
TEXAS LIC. # 90691
FIRM REGISTRATION # F-13790

P.E. SEAL/SIGNATURE/DATE

MAXIMUM DESIGN PRESSURE RATING (psf) SCHEDULE FOR A GIVEN GLASS TYPE AND GLASS PANEL DIMENSIONS "a" (in) x "b" (in)

(SEE LEGEND)

DRY GLAZED GLASS TYPE (G4T)

DIMENSION "a" *	DIMENSION "b" *	MAXIMUM DESIGN PRESSURE RATING(psf)
24"	FROM 24" TO 108"	70.0
30"	FROM 30" TO 108"	70.0
36"	FROM 36" TO 108"	70.0
42"	FROM 42" TO 108"	70.0
48"	FROM 48" TO 108"	70.0
54"	FROM 54" TO 108"	70.0
60"	FROM 60" TO 105"	70.0
62.5"	FROM 62.5" TO 95"	63.6

WET GLAZED GLASS TYPE (G34T)

DIMENSION "a" *	DIMENSION "b" *	MAXIMUM DESIGN PRESSURE RATING(psf)
24"	FROM 24" TO 101"	50.0
30"	FROM 30" TO 101"	50.0
36"	FROM 36" TO 101"	50.0
42"	FROM 42" TO 101"	50.0
47"	FROM 47" TO 97.5"	46.3

WET GLAZED GLASS TYPE (G12)

DIMENSION "a" *	DIMENSION "b" *	MAXIMUM DESIGN PRESSURE RATING(psf)
24"	FROM 24" TO 105"	80.0
30"	FROM 30" TO 105"	80.0
36"	FROM 36" TO 105"	80.0
42"	FROM 42" TO 105"	80.0
48"	FROM 48" TO 105"	80.0
54"	FROM 54" TO 105"	80.0
60"	FROM 60" TO 102"	80.0
62.5"	FROM 62.5" TO 93"	72.7

WET GLAZED GLASS TYPE (G37)

DIMENSION "a" *	DIMENSION "b" *	MAXIMUM DESIGN PRESSURE RATING(psf)
24"	FROM 24" TO 101"	50.0
30"	FROM 30" TO 101"	50.0
36"	FROM 36" TO 101"	50.0
42"	FROM 42" TO 101"	50.0
48"	FROM 48" TO 101"	50.0
54"	FROM 54" TO 101"	50.0
60"	FROM 60" TO 101"	50.0
62.5"	FROM 62.5" TO 95"	47.4

* DETERMINATION OF MAXIMUM DAY LIGHT OPENING (D.L.O.) AT EACH END OF GLASS GIVEN "a" & "b"

SIDE	MAXIMUM DAY LIGHT OPENING	
	(D.L.O.) Formula at Vertical & Horizontal Mullions	(D.L.O.) Formula at Jamb, Head & Sill Frames
MAX. D.L.O. (a) (SHORT SIDE)	"a"–5.00"	"a"–5.00"
MAX. D.L.O. (b) (LONG SIDE)	"b"–5.00"	"b"–5.00"

DIMENSIONS LEGEND *

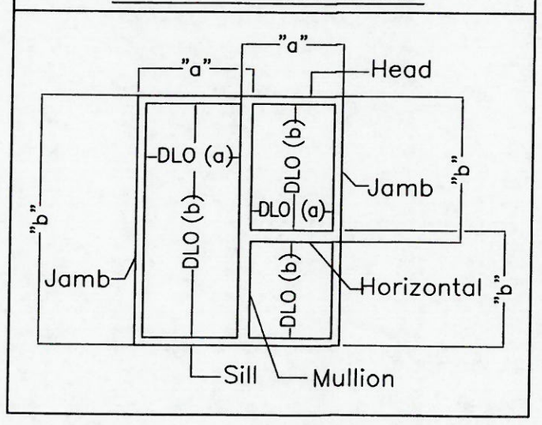

TEXAS DEPARTMENT OF INSURANCE – 2006

SERIES FG-5100T
HURRICANE RESISTANT
THERMAL STOREFRONT SYSTEM

DRAWN BY: F.R.L
10/16/14
DATE

14-076
DRAWING No

Oldcastle BuildingEnvelope®
803 AIRPORT RD. TERRELL TX 75160
www.OldcastleBE.com-Phone 800-869-4567

REV. No	DESCRIPTION	DATE	REV. No	DESCRIPTION	DATE
1	6 37 WET GLAZED	12/8/14			
2	GLASS DIMENSIONS	02/4/15			

SHEET 6 OF 12

WALTER A. TILLIT Jr P.E.
PROFESSIONAL ENGINEER
6355 N.W 36 STREET, STE. 305
VIRGINIA GARDENS, FL 33166
PHONE(305) 871-1531 FAX (305) 871-1531
TEXAS LIC. # 90691
FIRM REGISTRATION # F-13790

P.E. SEAL/SIGNATURE/DATE

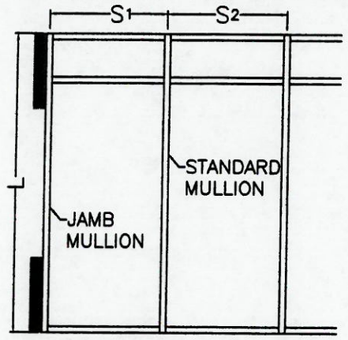

ELEVATION MULTIPLE PANEL

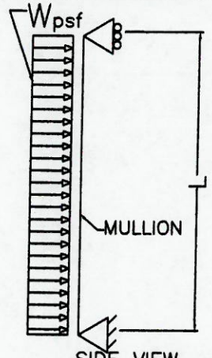

SIDE VIEW

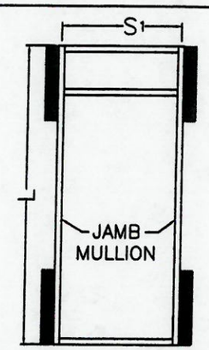

ELEVATION SINGLE PANEL

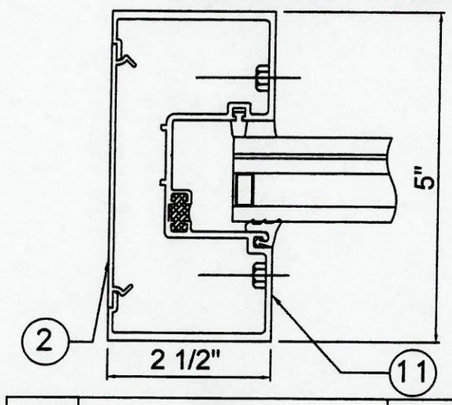

A	CASE:1 JAMB MULLION (2) + (11)	Ix= 5.7859 in4 Sx= 2.3144 in3
AIR/WATER INFILTRATION IS 15.0 psf		IN TERMS OF ALUM.

4 JAMB

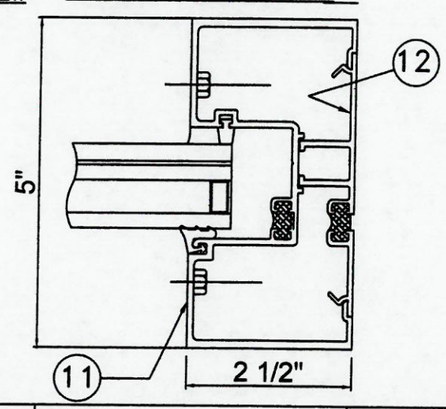

B	CASE:2 JAMB MULLION (12) + (11)	Ix= 5.8641 in4 Sx= 2.3456 in3
AIR/WATER INFILTRATION IS 15.0 psf		IN TERMS OF ALUM.

6 JAMB

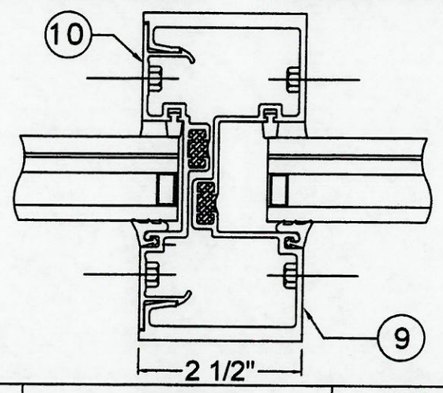

C	CASE:3 STANDARD MULLION (9) + (10)	Ix= 8.8604 in4 Sx= 3.5442 in3
AIR/WATER INFILTRATION IS 15.0 psf		IN TERMS OF ALUM.

5 VERTICAL

MAXIMUM JAMB MULLION SPAN "L"(ft) SCHEDULE FOR A GIVEN DESIGN PRESSURE RATING (psf) AND A GIVEN EFFECTIVE SPACING "b" (ft-in) *

MAXIMUM DESIGN PRESSURE RATING W(PSF)	EFFECTIVE SPACING	CASE 1 JAMB W/O CONNECTION SPAN	CASE 2 JAMB W/O CONNECTION SPAN
	"b" (Ft-in)	L (Ft-in)	LF (Ft-in)
50.0	1' - 9" 2' - 0" 2' - 3" 2' - 6"	10' - 0" 10' - 0" 10' - 0" 10' - 0"	10' - 0" 10' - 0" 10' - 0" 10' - 0"
55.0	1' - 9" 2' - 0" 2' - 3" 2' - 6"	10' - 0" 10' - 0" 10' - 0" 9' - 10"	10' - 0" 10' - 0" 10' - 0" 9' - 10"
60.0	1' - 9" 2' - 0" 2' - 3" 2' - 6"	10' - 0" 10' - 0" 10' - 0" 9' - 9"	10' - 0" 10' - 0" 10' - 0" 9' - 9"
65.0	1' - 9" 2' - 0" 2' - 3" 2' - 6"	10' - 0" 10' - 0" 10' - 0" 9' - 8"	10' - 0" 10' - 0" 10' - 0" 9' - 8"
70.0	1' - 9" 2' - 0" 2' - 3" 2' - 6"	10' - 0" 10' - 0" 10' - 0" 9' - 0"	10' - 0" 10' - 0" 10' - 0" 9' - 0"
75.0	1' - 9" 2' - 0" 2' - 3" 2' - 6"	10' - 0" 10' - 0" 9' - 6" 8' - 10"	10' - 0" 10' - 0" 9' - 6" 8' - 10"
80.0	1' - 9" 2' - 0" 2' - 3" 2' - 6"	10' - 0" 9' - 9" 9' - 3" 8' - 9"	10' - 0" 9' - 9" 9' - 3" 8' - 9"

L = JAMB MULLION SPAN EFFECTIVE SPACING

$*b = \frac{S1}{2}$ (SEE SCHEDULE)

MAXIMUM STANDARD MULLION SPAN "L"(ft) SCHEDULE FOR A GIVEN DESIGN PRESSURE RATING AND A GIVEN EFFECTIVE SPACING "b" *

MAXIMUM DESIGN PRESSURE RATING W(PSF)	EFFECTIVE SPACING	CASE 3 STANDARD UNREINFORCED MULLION C
	"b" (Ft-in)	L (Ft-in)
50.0	3' - 6" 4' - 0" 4' - 6" 5' - 0"	10' - 0" 10' - 0" 10' - 0" 10' - 0"
55.0	3' - 6" 4' - 0" 4' - 6" 5' - 0"	10' - 0" 10' - 0" 10' - 0" 9' - 10"
60.0	3' - 6" 4' - 0" 4' - 6" 5' - 0"	10' - 0" 10' - 0" 9' - 11" 9' - 7"
65.0	3' - 6" 4' - 0" 4' - 6" 5' - 0"	10' - 0" 10' - 0" 9' - 8" 9' - 4"
70.0	3' - 6" 4' - 0" 4' - 6" 5' - 0"	10' - 0" 9' - 9" 9' - 5" 9' - 0"
75.0	3' - 6" 4' - 0" 4' - 6" 5' - 0"	10' - 0" 9' - 7" 9' - 2" 8' - 10"
80.0	3' - 6" 4' - 0" 4' - 6" 5' - 0"	9' - 9" 9' - 4" 9' - 0" 8' - 8"

L = STANDARD MULLION SPAN EFFECTIVE SPACING

$*b = \frac{S1+S2}{2}$ (SEE SCHEDULE)

TEXAS DEPARTMENT OF INSURANCE – 2006

SERIES FG-5100T
HURRICANE RESISTANT
THERMAL STOREFRONT SYSTEM

DRAWN BY: F.R.L.
10/16/14
DATE

14-076
DRAWING No

SHEET 7 OF 12

Oldcastle BuildingEnvelope
803 AIRPORT RD. TERRELL TX 75160
www.OldcastleBE.com-Phone 800-869-4567

REV. No.	DESCRIPTION	DATE	REV. No.	DESCRIPTION	DATE

WALTER A. TILLIT Jr P.E.
PROFESSIONAL ENGINEER
6355 N.W 36 STREET, STE. 305
VIRGINIA GARDENS, FL 33166
PHONE(305) 871-1531 FAX (305) 871-1530
TEXAS LIC. # 90691
FIRM REGISTRATION # F-13790

P.E. SEAL/SIGNATURE/DATE

MAXIMUM DESIGN PRESSURE RATING FOR STANDARD & JAMB MULLION CONNECTIONS (B)

MAXIMUM MULLION SPAN "L" (Ft-in)	EFFECTIVE SPACING "b" (Ft-in)	CONNECTION TO CONCRETE & STEEL W/ 4 ANCHORS & TO WOOD W/ 8 ANCHORS △				CONNECTION TO CONCRETE & STEEL W/ 2 ANCHORS & TO WOOD W/ 6 ANCHORS △			
		POURED CONCRETE (Min. f'c= 3ksi) SUBSTRATE		1/4" Min. THK. ASTM A-36 STEEL SUBSTRATE	DOUBLE BUCK 3" Min. THK.(G=0.55) WOOD SUBSTRATE	POURED CONCRETE (Min. f'c= 3ksi) SUBSTRATE		1/4" Min. THK. ASTM A-36 STEEL SUBSTRATE	DOUBLE BUCK 3" Min. THK.(G=0.55) WOOD SUBSTRATE
		FASTENERS TYPES		FASTENERS	FASTENERS	FASTENERS TYPES		FASTENERS	FASTENERS
		B	C	D	E	B	C	D	E
8' - 6"	3' - 6"	80.0	80.0	80.0	80.0	78.0	73.6	80.0	80.0
	4' - 0"	80.0	80.0	80.0	80.0	68.2	64.4	80.0	75.0
	4' - 6"	80.0	80.0	80.0	80.0	60.7	57.2	78.5	66.6
	5' - 0"	80.0	80.0	80.0	80.0	54.6	51.5	70.6	60.0
9' - 0"	3' - 6"	80.0	80.0	80.0	80.0	73.7	69.5	80.0	80.0
	4' - 0"	80.0	80.0	80.0	80.0	64.4	60.8	80.0	70.8
	4' - 6"	80.0	80.0	80.0	80.0	57.3	54.0	74.1	62.9
	5' - 0"	80.0	80.0	80.0	80.0	51.6	48.6	66.7	56.7
9' - 6"	3' - 6"	80.0	80.0	80.0	80.0	69.8	65.8	80.0	76.7
	4' - 0"	80.0	80.0	80.0	80.0	61.1	57.6	79.0	67.1
	4' - 6"	80.0	80.0	80.0	79.5	54.3	51.2	70.2	59.6
	5' - 0"	80.0	80.0	80.0	71.6	48.8	46.1	63.2	53.7
10' - 0"	3' - 6"	80.0	80.0	80.0	80.0	66.3	62.5	80.0	72.8
	4' - 0"	80.0	80.0	80.0	80.0	58.0	54.7	75.0	63.7
	4' - 6"	80.0	80.0	80.0	75.5	51.6	48.6	66.7	56.7
	5' - 0"	80.0	80.0	80.0	68.0	46.4	43.8	60.0	51.0

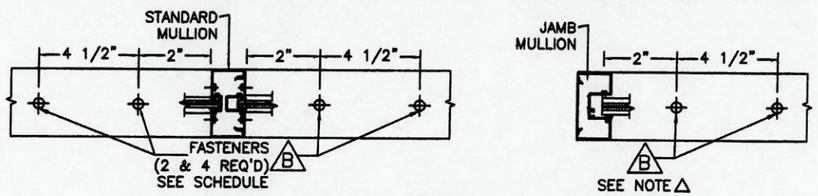

EXTERIOR

SCHEMATIC CONCRETE & STEEL CONNECTION DETAIL *

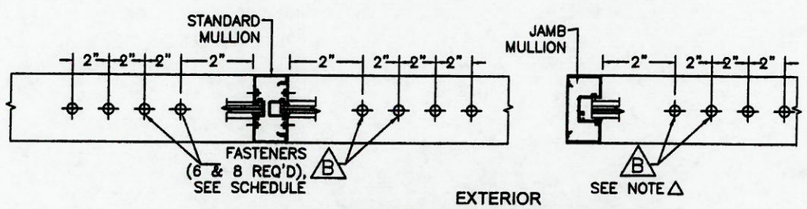

EXTERIOR

SCHEMATIC WOOD CONNECTION DETAIL *

* SEE CONNECTION DETAILS ON SHEETS 9 & 10.

NOTE △ TOTAL NUMBER OF ANCHORS INDICATED ON SCHEDULE CORRESPONDS TO STANDARD MULLION CONNECTION. TOTAL NUMBER OF REQUIRED ANCHORS FOR JAMB MULLION CONNECTION IS HALF OF THE TOTAL NUMBERS OF ANCHORS USED AT STANDARD MULLION CONNECTION.

(B) FASTENERS TYPES AND SUBSTRATES REQUIREMENTS W/ 4 1/2" MIN. E.D., BEYOND ANY FINISH MATERIAL & 3/8" MAX. SHIM SPACE

B - 3/8"Ø POWER FASTENERS TAPPER ANCHOR W/ 1 3/4" Min. EMBEDMENT INTO POURED CONCRETE (Min. f'c = 3 ksi) .

C - 3/8"Ø HILTI HUS-H SCREW ANCHOR W/ 2" Min. EMBEDMENT INTO POURED CONCRETE (Min. f'c = 3 ksi).

D - 3/8"Ø TYPE "F" BOLT OR 3/8"Ø -16 ELCO CONSTRUCTION PRODUCTS HEX WASHER HEAD DRILL-FLEX STRUCTURAL DRILL SCREWS TO 1/4" Min. THK. ASTM A-36 STEEL.

E - 3/8"Ø LAG SCREWS TO DOUBLE 2 x WOOD BUCK (G=0.55) W/ 3" Min. PENETRATION INTO WOOD.

MAXIMUM DESIGN PRESSURE RATING FOR STANDARD & JAMB MULLION CONNECTIONS (B)

MAXIMUM MULLION SPAN "L" (Ft-in)	EFFECTIVE SPACING "b" (Ft-in)	CONN. W/4 ANCHORS △		CONN. W/6 ANCHORS △		CONN. W/4 ANCHORS △
		POURED CONCRETE (Min. f'c= 3ksi) SUBSTRATE		GROUT FILLED CONCRETE BLOCK SUBTRATE		12 GAGE (0.108" Min. THK) Fy=33ksi STEEL SUBSTRATE
		FASTENERS TYPES		FASTENERS TYPES		FASTENERS
		G	H	G'	H'	I
8' - 6"	3' - 6"	80.0	80.0	80.0	80.0	80.0
	4' - 0"	80.0	80.0	79.4	80.0	80.0
	4' - 6"	80.0	80.0	70.6	80.0	80.0
	5' - 0"	78.6	80.0	63.5	80.0	80.0
9' - 0"	3' - 6"	80.0	80.0	80.0	80.0	80.0
	4' - 0"	80.0	80.0	75.0	80.0	80.0
	4' - 6"	80.0	80.0	66.7	80.0	80.0
	5' - 0"	74.2	80.0	60.0	80.0	80.0
9' - 6"	3' - 6"	80.0	80.0	80.0	80.0	80.0
	4' - 0"	80.0	80.0	71.1	80.0	80.0
	4' - 6"	78.1	80.0	63.2	80.0	80.0
	5' - 0"	70.3	80.0	56.8	80.0	80.0
10' - 0"	3' - 6"	80.0	80.0	77.1	80.0	80.0
	4' - 0"	80.0	80.0	67.5	80.0	80.0
	4' - 6"	74.2	80.0	60.0	80.0	80.0
	5' - 0"	66.8	80.0	54.0	80.0	80.0

■ MIN. SPACING (spcg.) REQUIRED FOR DIFFERENT SUBSTRATES

-POURED CONCRETE:	4 1/2" MIN. O.C.
-GROUT FILLED C.B.:	8" MIN. O.C.
-STEEL:	3" MIN. O.C.

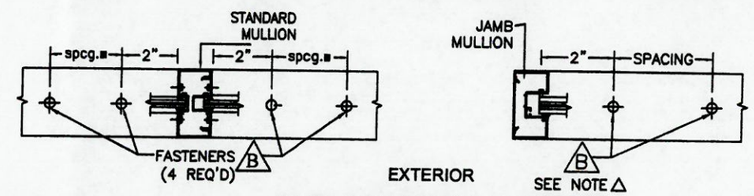

EXTERIOR

SCHEMATIC CONCRETE & 12 GAGE STEEL CONNECTION DETAIL *

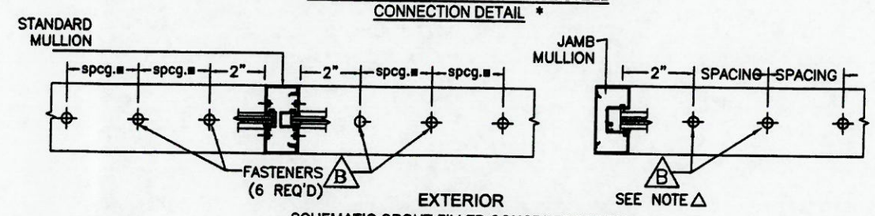

EXTERIOR

SCHEMATIC GROUT-FILLED CONCRETE BLOCK CONNECTION DETAIL *

* SEE CONNECTION DETAILS ON SHEETS 9 &10.

NOTE △ TOTAL NUMBER OF ANCHORS INDICATED ON SCHEDULE CORRESPONDS TO STANDARD MULLION CONNECTION. TOTAL NUMBER OF REQUIRED ANCHORS FOR JAMB MULLION CONNECTION IS HALF OF THE TOTAL NUMBERS OF ANCHORS USED AT STANDARD MULLION CONNECTION.

(B) FASTENERS TYPES AND SUBSTRATES REQUIREMENTS W/ 2 3/4" MIN. E.D., BEYOND ANY FINISH MATERIAL & 3/8" MAX. SHIM SPACE

G - 3/8"Ø POWER FASTENERS TAPPER ANCHOR W/ 1 3/4" Min. EMBEDMENT INTO POURED CONCRETE (Min. f'c = 3 ksi).

H - 3/8"Ø HILTI HUS-H SCREW ANCHOR W/ 2" Min. EMBEDMENT INTO POURED CONCRETE (Min. f'c = 3 ksi).

G' - 3/8"Ø POWER FASTENERS TAPPER ANCHOR W/ 1 3/4" Min. EMBEDMENT INTO GROUT FILLED CONCRETE BLOCK.

H' - 3/8"Ø HILTI HUS-H SCREW ANCHOR W/ 2 3/4" Min. EMBEDMENT INTO GROUT FILLED CONCRETE BLOCK.

I - 3/8"Ø TYPE "F" BOLT OR 3/8"Ø -16 ELCO CONSTRUCTION PRODUCTS HEX WASHER HEAD DRILL-FLEX STRUCTURAL DRILL SCREWS & 2" MIN. EDGE DISTANCE TO 12 GAGE (0.108" MIN THK.) Fy=33 ksi STEEL.

TEXAS DEPARTMENT OF INSURANCE - 2006

SERIES FG-5100T
HURRICANE RESISTANT
THERMAL STOREFRONT SYSTEM

DRAWN BY: F.R.L.
DATE 10/16/14
DRAWING No 14-076
SHEET 8 OF 12

Oldcastle BuildingEnvelope™
803 AIRPORT RD. TERRELL, TX 75160
www.OldcastleBE.com-Phone 800-869-4567

WALTER A. TILLIT Jr P.E.
PROFESSIONAL ENGINEER
6355 N.W 36 STREET, STE. 305
VIRGINIA GARDENS, FL 33166
PHONE(305) 871-1530 FAX (305) 871-1531
TEXAS LIC. # 90691
FIRM REGISTRATION # F-13790

P.E. SEAL/SIGNATURE/DATE

HEAD CONNECTION DETAILS FOR WET & DRY GLAZING SYSTEM

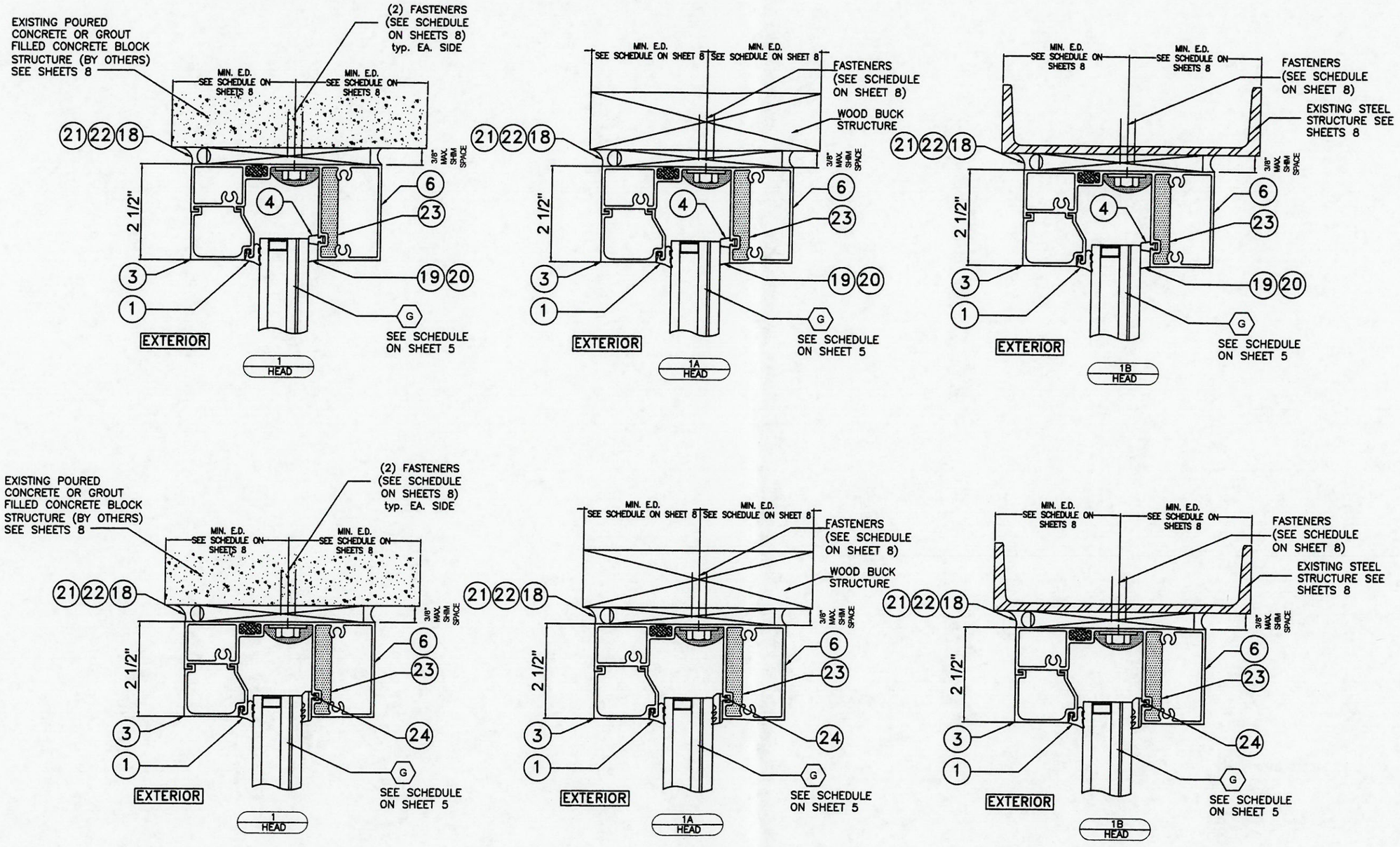

TEXAS DEPARTMENT OF INSURANCE – 2006

SERIES FG-5100T
HURRICANE RESISTANT
THERMAL STOREFRONT SYSTEM

DRAWN BY: F.R.L.
DATE 10/16/14

Oldcastle BuildingEnvelope™
803 AIRPORT RD. TERRELL, TX 75160
www.OldcastleBE.com Phone: 800-869-4567

14-076
DRAWING No

SHEET 9 OF 12

REV. No.	DESCRIPTION	DATE	REV. No.	DESCRIPTION	DATE

WALTER A. TILLIT Jr P.E.
PROFESSIONAL ENGINEER
6355 N.W 36 STREET, STE. 305
VIRGINIA GARDENS, FL 33166
PHONE(305) 871-1530 FAX (305) 871-1531
TEXAS LIC. # 90691
FIRM REGISTRATION # F-13790

P.E. SEAL/SIGNATURE/DATE

SILL CONNECTION DETAILS FOR WET & DRY GLAZING SYSTEM

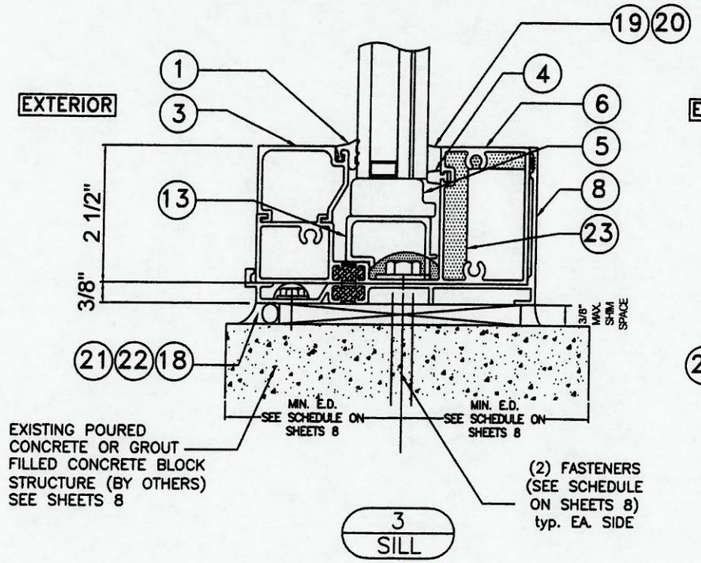

3
SILL

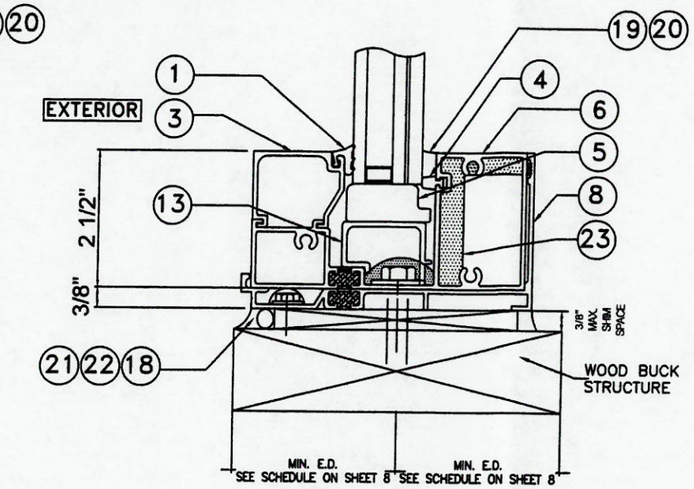

3A
SILL

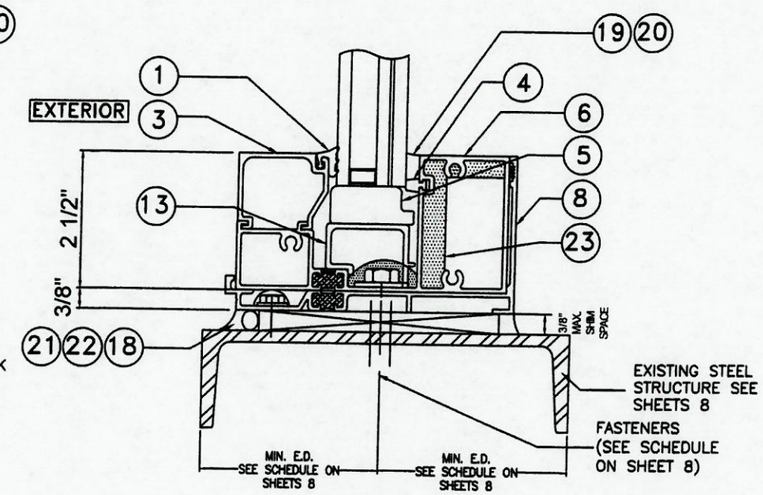

3B
SILL

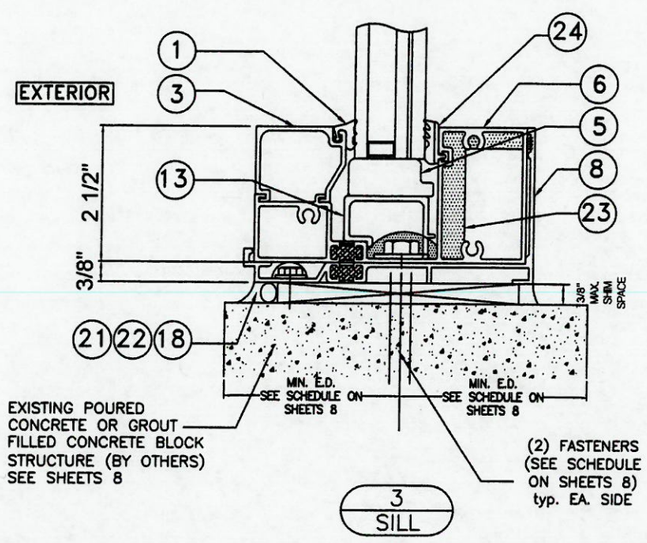

3
SILL

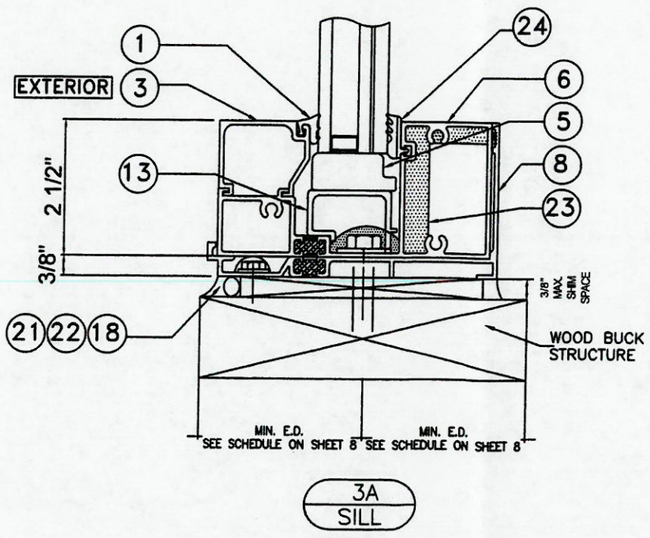

3A
SILL

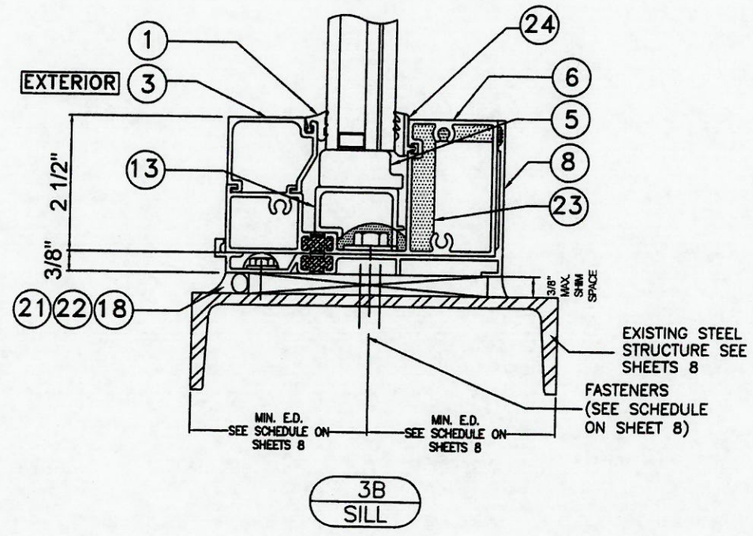

3B
SILL

TEXAS DEPARTMENT OF INSURANCE - 2006

SERIES FG-5100T
HURRICANE RESISTANT
THERMAL STOREFRONT SYSTEM

DRAWN BY: F.R.L.
DATE 10/16/14

Oldcastle BuildingEnvelope™
803 AIRPORT RD. TERRELL TX 75160
www.OldcastleBE.com-Phone 800-869-4567

14-076
DRAWING No

SHEET 10 OF 12

WALTER A. TILLIT Jr P.E.
PROFESSIONAL ENGINEER
6355 N.W. 36 STREET, STE. 305
VIRGINIA GARDENS, FL 33166
PHONE(305) 871-1530 FAX (305) 871-1531
TEXAS LIC. # 90691
FIRM REGISTRATION # F-13790

P.E. SEAL/SIGNATURE/DATE

CONNECTION DETAILS FOR WET & DRY GLAZING SYSTEM

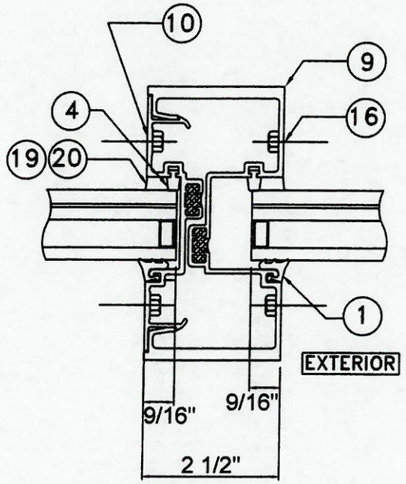

5
VERTICAL

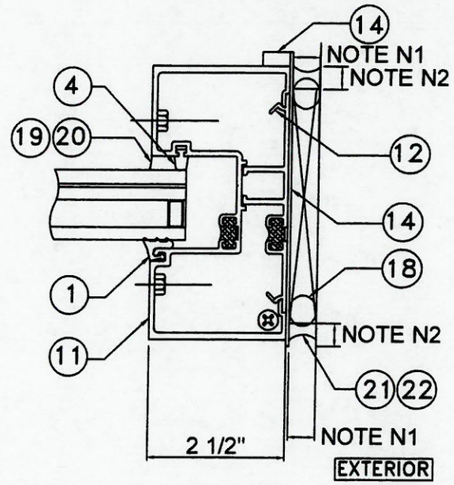

6
JAMB

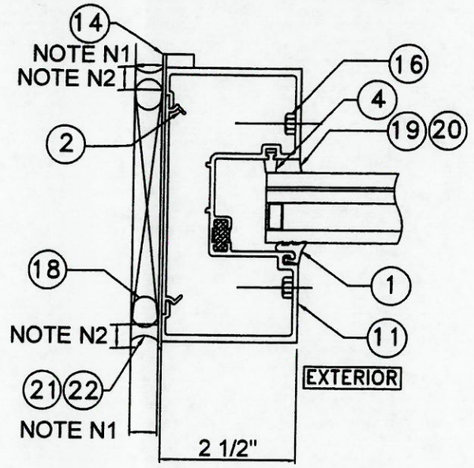

6A
JAMB

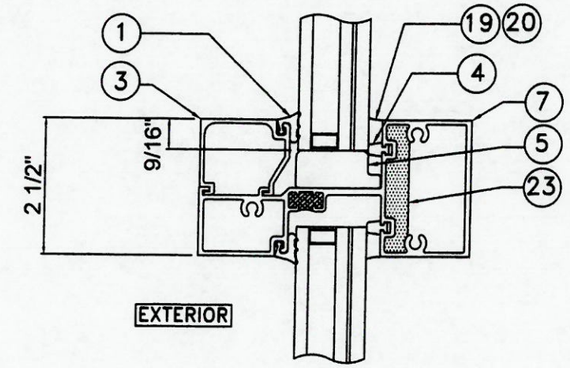

7
HORIZONTAL MULLION

WET GLAZED

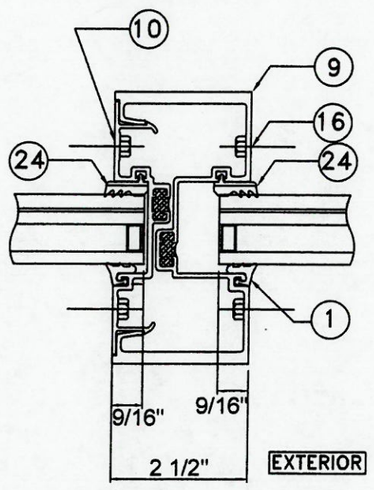

5
VERTICAL

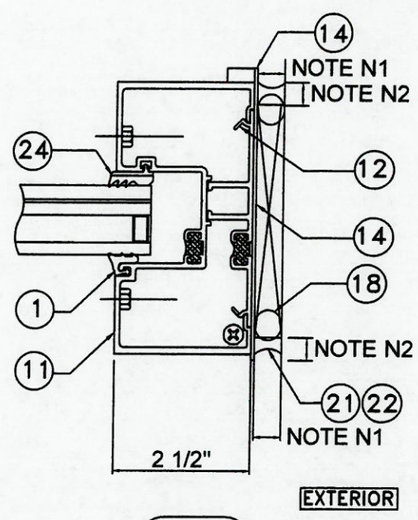

6
JAMB

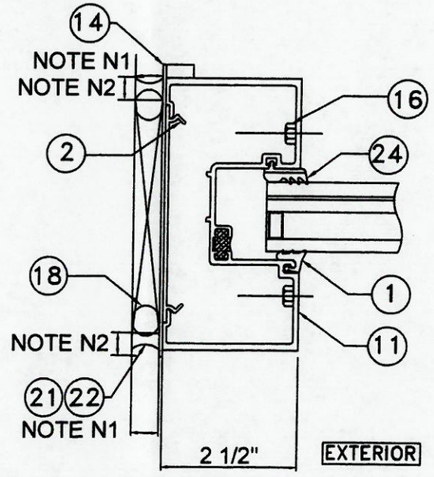

6A
JAMB

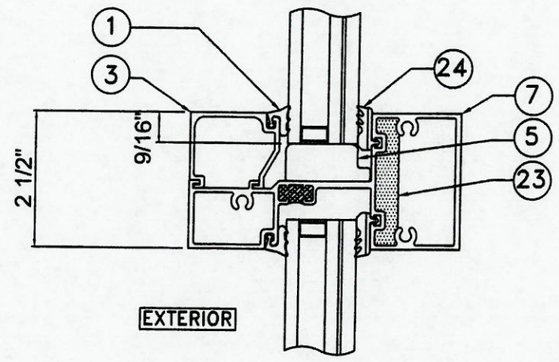

7
HORIZONTAL MULLION

DRY GLAZED

SEALANT JOINT NOTES *

N1 : 1/2" MIN. & 1 3/4" MAX. WIDE JOINT W/ SEALANTS 21, 22

N2 : 1/4" MIN. & 3/8" MAX. DEPTH JOINT W/ 1/4" DEPTH AT MIDWIDTH OF JOINT W/ SEALANTS 21, 22

* INDICATED MAXIMUM AND MINIMUM VALUES FOR SPECIFIED SEALANT VERTICAL JOINT WIDTH AT JAMBS PER NOTES N1 & N2 HAVE BEEN DETERMINED ONLY TAKING INTO CONSIDERATION THE ACTUAL MOVEMENT OF GLASS WALL AT JAMBS DUE TO THERMAL, WIND AND ITS OWN CONSTRUCTION TOLERANCE, AND NOT PERFORMANCE FACTORS FROM THE SURROUNDING STRUCTURE.

TEXAS DEPARTMENT OF INSURANCE - 2006

SERIES FC-5100T
HURRICANE RESISTANT
THERMAL STOREFRONT SYSTEM

Oldcastle BuildingEnvelope™
803 AIRPORT RD. TERRELL, TX 75160
www.OldcastleBE.com-Phone 800-869-4567

REV. No	DESCRIPTION	DATE	REV. No	DESCRIPTION	DATE

DRAWN BY: F.R.L.
DATE 10/16/14
DRAWING No 14-076
SHEET 11 OF 12

WALTER A. TILLIT Jr P.E.
PROFESSIONAL ENGINEER
6355 N.W 36 STREET, STE. 305
VIRGINIA GARDENS, FL 33166
PHONE(305) 871-1530 FAX (305) 871-1531
TEXAS LIC. # 90691
FIRM REGISTRATION # F-13790

P.E. SEAL/SIGNATURE/DATE

JAMB MULLION DETAIL AT HORIZONTALS, HEAD & SILL

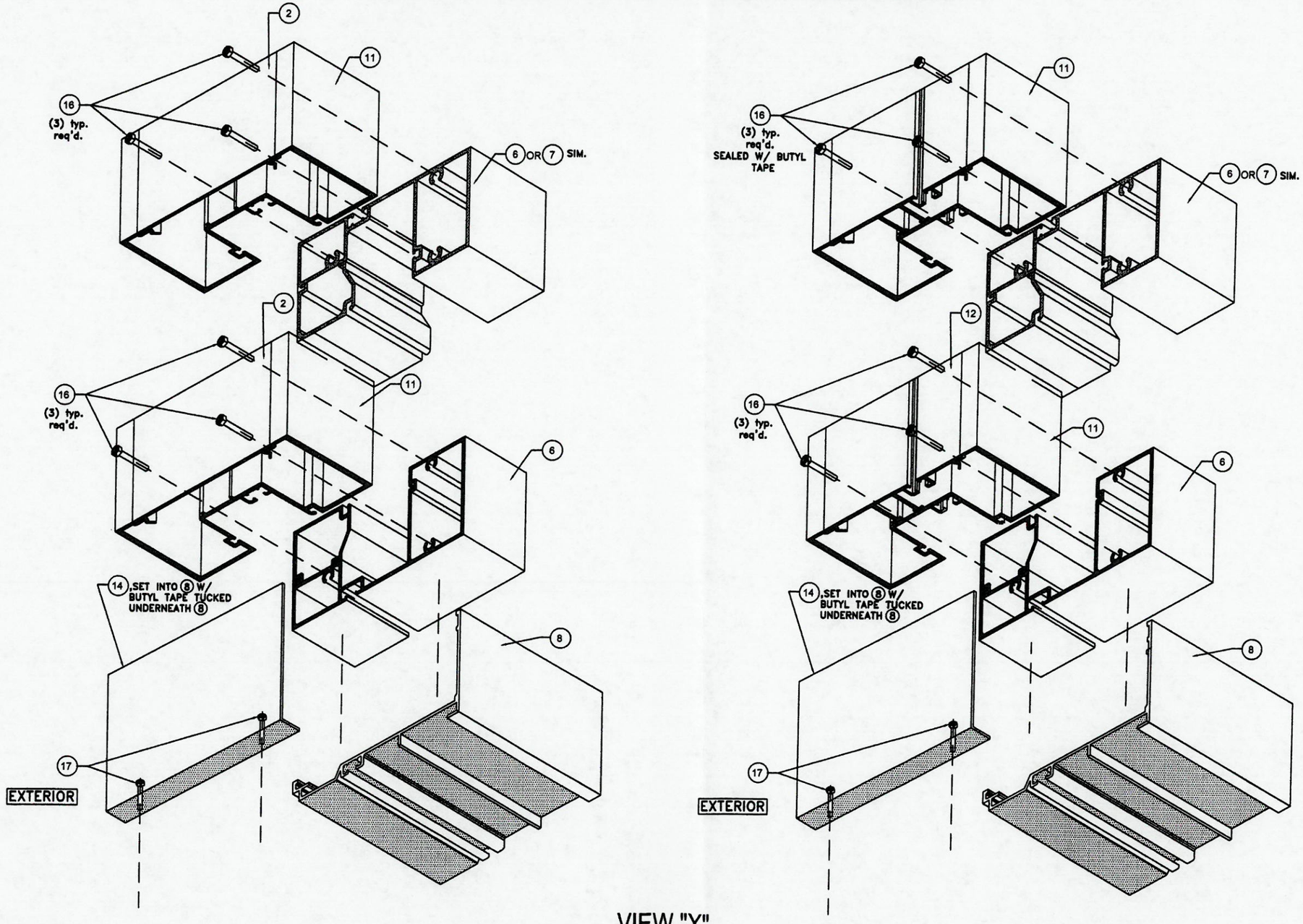

VIEW "X"
(ISOMETRIC)

TEXAS DEPARTMENT OF INSURANCE - 2006

SERIES FG-5100T
HURRICANE RESISTANT
THERMAL STOREFRONT SYSTEM

Oldcastle BuildingEnvelope
803 AIRPORT RD. TERRELL TX 75160
www.OldcastleBE.com-Phone: 800-869-4567

DRAWN BY: F.R.L
10/16/14
DATE
14-076
DRAWING No
SHEET 12 OF 12

WALTER A. TILLIT Jr P.E.
PROFESSIONAL ENGINEER
6355 N.W 36 STREET, STE. 305
VIRGINIA GARDENS, FL 33166
PHONE(305) 871-1530 FAX (305) 871-1531
TEXAS LIC. # 90691
FIRM REGISTRATION # F-13790

P.E. SEAL/SIGNATURE/DATE