SERIES FG-5100 FLUSH GLAZED ALUMINUM WINDOW WALL SYSTEM FOR USE IN HURRICANE ZONES REQUIRING LARGE & SMALL MISSILE IMPACT PROTECTION. (LAMINATED OR INSULATED WET & INSULATED DRY GLAZED)

GENERAL NOTES:

1. SERIES FG-5100 FLUSH GLAZED ALUMINUM WINDOW WALL SYSTEM LARGE & SMALL MISSILE IMPACT SHOWN ON THIS PRODUCT EVALUATION DOCUMENT (P.E.D.) HAS BEEN VERIFIED FOR COMPLIANCE IN ACCORDANCE WITH THE 2006 EDITION OF THE INTERNATIONAL BUILDING CODE, (I.B.C) AND INTERNATIONAL RESIDENTIAL CODE, (I.R.C) WITH THE 2006 TEXAS REVISIONS, EFFECTIVE JANUARY 1, 2008.

   DESIGN WIND LOADS SHALL BE DETERMINED AS PER SECTION 1609 OF THE INTERNATIONAL BUILDING CODE, FOR A BASIC WIND SPEED AS REQUIRED BY THE JURISDICTION WHERE PRODUCT WILL BE INSTALLED, AND FOR A DIRECTIONALITY FACTOR Kd = 0.85, IN ACCORDANCE WITH ASCE 7-05 STANDARD, AND SHALL NOT EXCEED THE DESIGN PRESSURE RATING INDICATED ON NOTE 2.

   IN ORDER TO VERIFY THAT ANCHORS ON THIS P.E.D., AS TESTED, WERE NOT OVERSTRESSED, A 33% INCREASE IN ALLOWABLE STRESS FOR WIND LOADS WAS NOT USED IN THEIR ANALYSIS. FASTENERS SPACING TO WOOD HAS BEEN DETERMINED IN ACCORDANCE WITH N.D.S. 2005.

   THIS PRODUCT'S ADEQUACY FOR IMPACT AND CYCLIC RESISTANCE HAS BEEN VERIFIED IN ACCORDANCE WITH SECTIONS 1609.1.4 AND R301.2.1.2 OF THE ABOVE MENTIONED CODES RESPECTIVELY AS PER FLORIDA BUILDING CODE HIGH VELOCITY HURRICANE ZONE PROTOCOLS TAS-201, TAS-202, TAS-203, PER CERTIFIED TESTING LABORATORIES REPORT #CTLA-1177W, ARCHITECTURAL TESTING REPORT #86107.02-401-18 & 88725.02-401-18 AND AS PER SUBMITTED STRUCTURAL CALCULATIONS, PERFORMED AS PER SECTION 1604 OF THE ABOVE MENTIONED BUILDING CODE.

2. MAXIMUM DESIGN PRESSURE RATING FOR THIS WINDOW WALL SYSTEM SHALL BE AS SHOWN ON SHEETS 6, 7, 8, 9, 10, 11, 12, 13 AND 14.

3. THIS PRODUCT WILL NOT REQUIRE A HURRICANE PROTECTION DEVICE.

4. THIS PRODUCT IS APPROVED FOR AIR/WATER INFILTRATION (15 psf).

5. SERIES FG-5100 FLUSH GLAZED ALUMINUM WINDOW WALL SYSTEM LARGE & SMALL MISSILE IMPACT SHALL COMPLY WITH SECTION 1604 OF THE INTERNATIONAL BUILDING CODE.

6. PROVIDE 1 3/8" MAX. LOAD BEARING SHIM (TYP.), WHEN ALLOWED BY THIS DRAWING.

7. WOOD BUCKS BY OTHERS, MUST BE ANCHORED PROPERLY TO TRANSFER LOADS TO THE BUILDING STRUCTURE. WOOD BUCKS MUST BE SOUTHERN PINE, G = 0.55.

8. REMAINING COMPONENTS FOR THIS WINDOW WALL SYSTEM SHALL BE AS INDICATED ON BILL OF MATERIALS, SHEET 3 OF THIS DRAWING.

9. ALL ALUMINUM EXTRUSIONS IN CONTACT WITH STEEL, CONCRETE, GROUT FILLED CONCRETE BLOCK AND WOOD SHALL COMPLY WITH SECTION 6.7 OF THE ALUMINUM DESIGN MANUAL 2005 EDITION.

10. SHOP DRAWINGS PREPARED BASED ON THIS T.D.I REPORT AND TAKING INTO ACCOUNT THE SPECIFIC JOB CONDITIONS, SHALL BE SUBMITTED TO THE BUILDING OFFICIAL AS PART OF THE PERMIT DOCUMENTS.

11. SUBSTRATE MATERIAL NOTED ON THIS DRAWING AS EXISTING BY OTHERS, POURED CONCRETE, GROUT FILLED CONCRETE BLOCK AND WOOD MUST WITHSTAND THE LOADS IMPOSED BY THIS PRODUCT.

12. THIS PRODUCT'S INSTALLATION SHALL COMPLY WITH ALL SPECS INDICATED IN THIS DRAWING PLUS ANY BUILDING AND ZONING REGULATIONS PROVIDED BY THE JURISDICTION WHERE PERMIT IS APPLIED TO.

13. (a) THIS P.E.D. PREPARED BY THIS ENGINEER IS GENERIC AND DOES NOT PROVIDE INFORMATION FOR A SITE SPECIFIC PROJECT; i.e. WHERE THE SITE CONDITIONS DEVIATE FROM THE P.E.D.

    (b) CONTRACTOR TO BE RESPONSIBLE FOR THE SELECTION, PURCHASE AND INSTALLATION INCLUDING LIFE SAFETY OF THIS PRODUCT, BASED ON THIS P.E.D., PROVIDED HE/SHE DOES NOT DEVIATE FROM THE CONDITIONS DETAILED ON THIS DOCUMENT. CONSTRUCTION SAFETY AT SITE IS THE CONTRACTOR'S RESPONSIBILITY.

    (c) THIS P.E.D. WILL BE CONSIDERED INVALID IF ALTERED BY ANY MEANS.

    (d) SITE SPECIFIC PROJECTS SHALL BE PREPARED BY A PROFESSIONAL ENGINEER OR ARCHITECT WHICH WILL BECOME THE ENGINEER OF RECORD (E.O.R.) FOR THE PROJECT AND WHO WILL BE RESPONSIBLE FOR THE PROPER USE OF THE P.E.D. ENGINEER OF RECORD, ACTING AS A DELEGATED ENGINEER TO THE P.E.D. ENGINEER, SHALL SUBMIT TO THIS LATTER THE SITE SPECIFIC DRAWINGS FOR REVIEW.

    (e) ORIGINAL P.E.D. SHALL BEAR THE DATE AND ORIGINAL SEAL AND SIGNATURE OF THE PROFESSIONAL ENGINEER OF RECORD THAT PREPARED IT.

14. PRODUCT MANUFACTURE'S LABEL SHALL BE LOCATED ON A READILY VISIBLE LOCATION AT PRODUCT IN ACCORDANCE WITH TEXAS DEPARTMENT OF INSURANCE REQUIREMENTS. ONE LABEL SHALL BE PLACED FOR EVERY OPENING.

INDEX:

SHEET 1: GENERAL NOTES, INDEX AND INSTRUCTIONS.
SHEET 2: COMPONENTS.
SHEET 3: BILL OF MATERIALS.
SHEET 4: ISOMETRIC ELEVATION FOR FG-5100 FLUSH GLAZED ALUMINUM WINDOW WALL SYSTEM.
SHEET 5: TYPICAL GLAZING DETAILS & GLASS SCHEDULE.
SHEET 6: MAXIMUM DESIGN PRESSURE RATING SCHEDULE FOR A GIVEN GLASS TYPE AND GLASS PANEL DIMENSIONS.
SHEET 7: MAXIMUM DESIGN PRESSURE RATING FOR STANDARD, HEAVY & CORNER MULLION W/ LAMINATED GLASS.
SHEET 8: MAXIMUM DESIGN PRESSURE RATING FOR STANDARD, HEAVY & CORNER MULLION W/ INSULATED GLASS.
SHEET 9: MAXIMUM DESIGN PRESSURE RATING FOR REINFORCED JAMB MULLION W/ LAMINATED OR INSULATED GLASS (WET GLASS).
SHEET 10: MAXIMUM DESIGN PRESSURE RATING FOR HORIZONTAL W/ LAMINATED OR INSULATED GLASS.
SHEET 11: MAXIMUM DESIGN PRESSURE RATING FOR MULLION CONNECTIONS.
SHEET 12: MAXIMUM DESIGN PRESSURE RATING FOR MULLION CONNECTIONS (CONTINUED).
SHEET 13: MAXIMUM DESIGN PRESSURE RATING FOR JAMBS FASTENED W/ 3/8"ø FASTENERS.
SHEET 14: MAXIMUM DESIGN PRESSURE RATING FOR JAMBS FASTENED W/ 1/2"ø FASTENERS.
SHEET 15: HEAD CONNECTION DETAILS.
SHEET 16: SILL CONNECTION DETAILS.
SHEET 17: HORIZONTAL SECTIONS AT STANDARD, HEAVY & CORNER MULLION W/ LAMINATED GLASS.
SHEET 18: HORIZONTAL SECTIONS AT STANDARD, HEAVY & CORNER MULLION W/ INSULATED GLASS (WET & DRY GLAZED).
SHEET 19: HORIZONTAL CONNECTIONS DETAIL AT JAMB.
SHEET 20: CORNER DETAIL AT JAMB.

INSTRUCTIONS:

STEP 1: DETERMINE DESIGN WIND LOAD REQUIREMENTS BASED ON WIND VELOCITY, BUILDING HEIGHT, WIND ZONE, USING APPLICABLE ASCE 7 STANDARDS.

STEP 2: GO TO SCHEDULE ON SHEET 6, TO DETERMINE MAXIMUM DESIGN PRESSURE RATING (psf) OF DESIRED GLASS SIZE BASED ON GLASS PANEL DIMENSIONS.

STEP 3: DETERMINE MAXIMUM MULLION SPAN "L"(FT) FOR A GIVEN MULLION EFFECTIVE SPACING "b", ON SCHEDULE ON SHEETS 7 & 8, AND SELECT ANCHOR OPTION W/ DESIGN PRESSURE RATING EQUAL OR GREATER THAN DESIGN LOAD SPECIFIED IN STEP 1 USING SCHEDULES ON SHEETS 11 AND 12.

STEP 4: USE SCHEDULES ON SHEETS 13 AND 14, TO SELECT JAMB ANCHOR OPTION W/ ANCHORAGE OR SHEET 9, FOR W/O ANCHORAGE WITH DESIGN PRESSURE RATING EQUAL OR GREATER THAN DESIGN LOAD SPECIFIED IN STEP 1.

STEP 5: USE SCHEDULE ON SHEET 10, TO VERIFY MAXIMUM DESIGN PRESSURE RATING OF HORIZONTALS (IF USED), TO BE EQUAL OR GREATER THAN DESIGN LOAD SPECIFIED IN STEP 1.

STEP 6: THE LOWEST VALUE OF DESIGN PRESSURE RATING RESULTING FROM STEPS 2, 3, 4 AND 5 SHALL APPLY TO THE ENTIRE SYSTEM.

THIS DRAWING SHALL ONLY BE USED TO OBTAIN PERMITS UNDER THE TEXAS DEPARTMENT OF INSURANCE JURISDICTION

TEXAS DEPARTMENT OF INSURANCE - 2006

SERIES FG-5100 FLUSH GLAZED ALUMINUM WINDOW WALL SYSTEM
LARGE & SMALL MISSILE IMPACT LAMINATED OR INSULATED WET & INSULATED DRY GLAZED

Oldcastle BuildingEnvelope™
803 AIRPORT RD. TERRELL, TX 75160
www.OldcastleBE.com-Phone 800-869-4567

REV. No	DESCRIPTION	DATE	REV. No	DESCRIPTION	DATE

DRAWN BY: F.R.L
DATE 12/4/14
DRAWING No 14-086
SHEET 1 OF 20

WALTER A. TILLIT Jr P.E.
PROFESSIONAL ENGINEER
6355 N.W 36 STREET, STE. 305
VIRGINIA GARDENS, FL 33166
PHONE(305) 871-1531 FAX (305) 871-1530
TEXAS LIC. # 90691
FIRM REGISTRATION # F-13790

2/1/16

P.E. SEAL/SIGNATURE/DATE

SERIES FG-5100 FLUSH GLAZED ALUMINUM WINDOW WALL SYSTEM COMPONENTS:
(LAMINATED OR INSULATED WET & INSULATED DRY GLAZED)

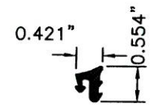

1 EXTERIOR GLAZING GASKET FG-1133

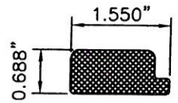

3 SETTING BLOCK FG-5186

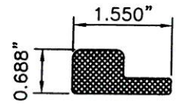

4 TRANSITION SETTING BLOCK FG-5187

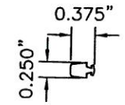

5 SPACER GASKET FG-5185

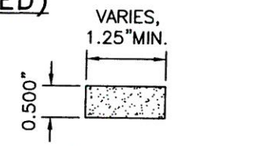

6 JOINT SEALANT TAPE SM-5601

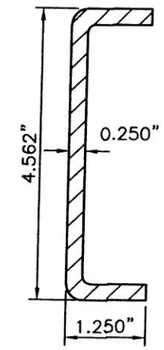

9 STEEL REINFORCEMENT FG-5000-PP8

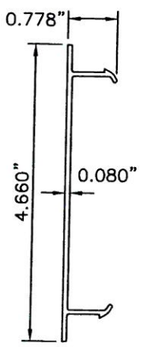

11 FLAT FILLER AT JAMB FG-5167

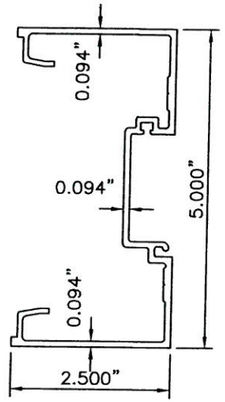

12 STANDARD UNATTACHED JAMB MULLIONS FG-5173

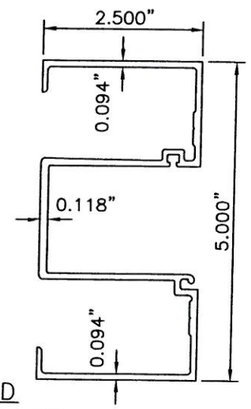

13 JAMB FG-5174

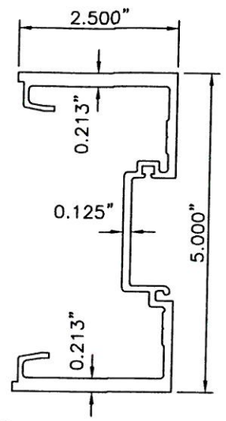

14 HEAVY MULLION FG-5175

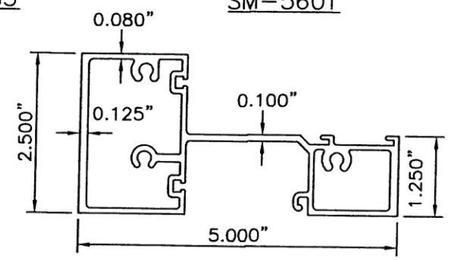

15 HORIZONTAL FG-5176

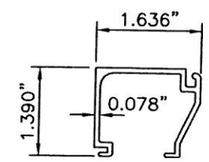

16 GLASS STOP FG-5177

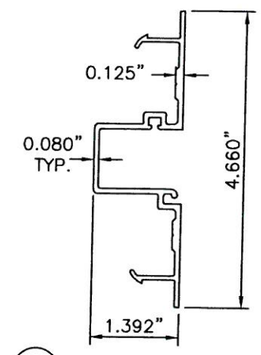

18A CORNER MULLION POCKET FILLER FOR L.G FG-5196

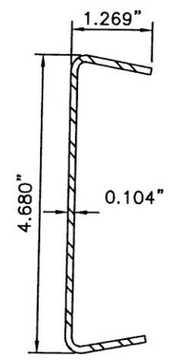

10 STEEL REINFORCEMENT 9956

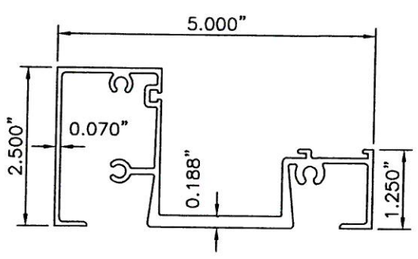

17 HEAD/SILL FG-5178

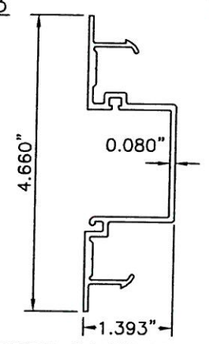

18 OPEN BACK MULLION POCKET FILLER FOR I.G. FG-5179

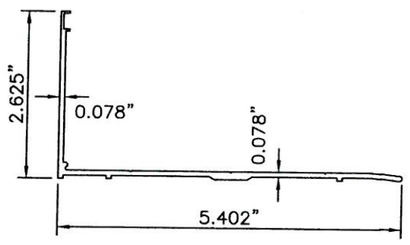

19 SILL PAN FG-5180

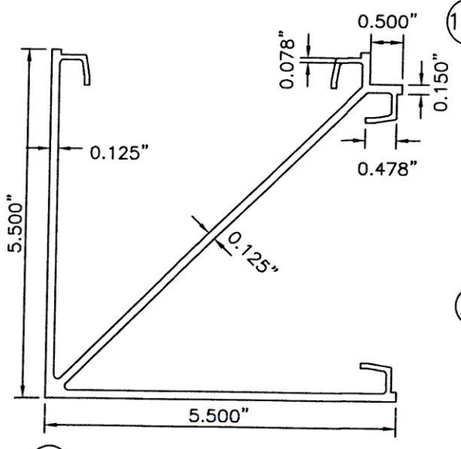

33 90 DEGREES CORNER MULLION FG-5200

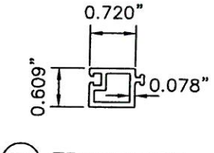

22 TRANSITION GLAZING ADAPTER FG-5183

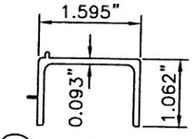

23 SETTING CHAIR FG-5184

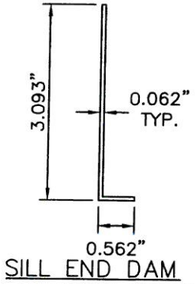

24 SILL END DAM FG-5000-FP-10

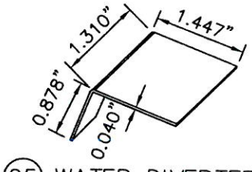

25 WATER DIVERTER FG-5100-FP-5

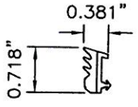

32 INTERIOR GASKET FG-5948

TEXAS DEPARTMENT OF INSURANCE - 2006

SERIES FG-5100 FLUSH GLAZED ALUMINUM WINDOW WALL SYSTEM
LARGE & SMALL MISSILE IMPACT LAMINATED OR INSULATED WET & INSULATED DRY GLAZED

Oldcastle BuildingEnvelope™
803 AIRPORT RD. TERRELL, TX 75160
www.OldcastleBE.com-Phone: 800-869-4567

REV. No	DATE	DESCRIPTION	REV. No	DATE	DESCRIPTION

DRAWN BY: F.R.L
DATE 12/4/14
DRAWING No 14-086
SHEET 2 OF 20

WALTER A. TILLIT Jr P.E.
PROFESSIONAL ENGINEER
6355 N.W 36 STREET, STE. 305
VIRGINIA GARDENS, FL 33166
PHONE(305) 871-1530 FAX (305) 871-1531
TEXAS LIC. # 90691
FIRM REGISTRATION # F-13790

2/1/16

P.E. SEAL/SIGNATURE/DATE

BILL OF MATERIALS

ITEM No.	PART NUMBER	DESCRIPTION	DIMENSIONS	MATERIAL	MANUFACTURER	NOTES
1.	FG-1133	EXTERIOR GLAZING GASKET	0.421" X .554"	70 DUROMETER EPDM	TRELLEBORG OR EPG	FOR 1 5/16" OR 5/8" GLAZING FOR WET & DRY GLAZED
3.	FG-5186	SETTING BLOCK	1.550" X .688"	SILICONE	VARIES	AT SILL & HORIZONTAL
4.	FG-5187	TRANSITION SETTING BLOCK	1.550" X .688"	EPDM	VARIES	AT SILL & HORIZONTAL
5.	FG-5185	SPACER GASKET	0.375 X .250	SILICONE	VARIES	
6.	SM-5601	JOINT SEALANT TAPE	.125" X .50" VARIES	BUTYL	SCHNEE-MOREHEAD	
7.	FS-8	SPLINE ASSEMBLY SCREW	#14 X 1 HHSTS	STEEL	VARIES	ZINC COATED PER ASTM B-633
8.	FS-38	ATTACH STEEL REINFORCEMENT	1/4-20 X ½" HH TYPE F	STEEL	VARIES	1" FROM EACH END, ZINC COATED PER ASTM B-633
9.	FG-5000-PP8	STEEL REINFORCEMENT FOR FG-5173 STANDARD MULLION	1.250" X 4.562" X .250"	A36 STEEL	VARIES	FULL MULLION LENGTH
10.	9956	STEEL REINFORCEMENT FOR FG-5173 UNATTACHED JAMB MULLION	1.269" X 4.680" X .104" GA.	A36 STEEL	VARIES	ALT. WALL JAMB, FULL MULLION LENGTH
11.	FG-5167	FLAT FILLER @ JAMB	.778" X 4.660" X .080"	6063-T6 ALUMINUM	OLDCASTLE BE	USE @ ALT. WALL JAMB
12.	FG-5173	STANDARD /UNATTACHED JAMB MULLIONS	2.50" X 5.00" X .094"	6063-T6 ALUMINUM	OLDCASTLE BE	
13.	FG-5174	JAMB	2.50" X 5.00" X .118" X .094"	6063-T6 ALUMINUM	OLDCASTLE BE	ATTACHED TO EXISTING WALL
14.	FG-5175	HEAVY MULLION	2.50" X 5.00" X .125" X .213"	6063-T6 ALUMINUM	OLDCASTLE BE	
15.	FG-5176	HORIZONTAL	2.50" X 5.00" X .125" X .080" X .100"	6063-T6 ALUMINUM	OLDCASTLE BE	
16.	FG-5177	GLASS STOP	1.39" X 1.63" X .078"	6063-T6 ALUMINUM	OLDCASTLE BE	
17.	FG-5178	HEAD/SILL	2.50" X 5.00" X .070" X 0.188"	6063-T6 ALUMINUM	OLDCASTLE BE	
18.	FG-5179	OPEN BACK MULLION POCKET FILLER FOR I.G.	1.39" X 4.66" X .080"	6063-T6 ALUMINUM	OLDCASTLE BE	FOR CORNER OR STANDARD MULLION
18A.	FG-5196	CORNER MULLION POCKET FILLER FOR L.G.	1.39" X 4.66" X .080" X .125"	6063-T5 ALUMINUM	OLDCASTLE BE	WET GLAZED, CORNER MULLION
19.	FG-5180	SILL PAN	2.62" X 5.40" X .078"	6063-T6 ALUMINUM	OLDCASTLE BE	
22.	FG-5183	TRANSITION GLAZING ADAPTER FOR L.G.	.609" X .720" X .078"	6063-T5 ALUMINUM	OLDCASTLE BE	
23.	FG-5184	SETTING CHAIR	1.062" X 1.595" X .093"	6063-T5 ALUMINUM	OLDCASTLE BE	CUT 4" LONG, AT SILL
24.	FG-5000-FP-10	SILL END DAM	0.562" X 3.093" X .062"	6063-T5 ALUMINUM	OLDCASTLE BE	5.00" LONG
25.	FG-5100-FP-5	WATER DIVERTER	.878" X 1.447" X .040"	RIGID PVC		CUT 1.562 LONG & LOCATE @ EACH END
26.	#995	STRUCTURAL SILICONE	FILL SPACE	SILICONE	DOW CORNING	WET GLAZED
29.	FASTENER	FOR ATTACHING SILL PAN TO CONCRETE SUBSTRATE	3/16" X 2" SHWH	STAINLESS STEEL	TAPCON	1" MIN. EMBEDMENT NON-STRUCTURAL
30.	FASTENER	FOR ATTACHING SILL PAN FLASHING TO WOOD SUBSTRATE	3/16" X 2" LAG BOLT	STEEL	VARIES	1" MIN. EMBEDMENT NON-STRUCTURAL
31.	FASTENER	FOR ATTACHING SILL PAN FLASHING TO STL SUBSTRATE	3/16" X 1" DRILL FLEX #5	STEEL	VARIES	1" MIN. EMBEDMENT NON-STRUCTURAL
32.	FG-5948	INTERIOR GASKET	0.381" X 0.718"	EPDM	EPG	DRY GLAZED GASKET
33.	FG-5200	90 DEGREES CORNER MULLION	5.50" X 5.50" X 0.125"	6063-T6 ALUMINUM	OLDCASTLE BE	
38.	SPECTREM 2	STRUCTURAL SILICONE	FILL SPACE	SILICONE	TREMCO	
39.	FS-54	PHILLIPS FLAT HEAD MACHINE SCREW U.C.	#10-24 x 3/8"	STEEL	VARIES	ZINC COATED, PER ASTM B-633.
40.	#795	PERIMETER SELEANT	–	SILICONE	DOW CORNING	

TEXAS DEPARTMENT OF INSURANCE - 2006

SERIES FG-5100 FLUSH GLAZED
ALUMINUM WINDOW WALL SYSTEM
LARGE & SMALL MISSILE IMPACT LAMINATED OR INSULATED WET & INSULATED DRY GLAZED

DRAWN BY: F.R.L
DATE: 12/4/14
DRAWING No: 14-086
SHEET 3 OF 20

Oldcastle BuildingEnvelope®
803 AIRPORT RD. TERRELL, TX 75160
www.OldcastleBE.com-Phone 800-869-4567

REV. No	DESCRIPTION	DATE	REV. No	DESCRIPTION	DATE

WALTER A. TILLIT Jr P.E.
PROFESSIONAL ENGINEER
6355 N.W 36 STREET, STE. 305
VIRGINIA GARDENS, FL 33166
PHONE(305) 871-1531 FAX (305) 871-1530
TEXAS LIC. # 90691
FIRM REGISTRATION # F-13790

P.E. SEAL/SIGNATURE/DATE:

ISOMETRIC ELEVATION FOR FG-5100 FLUSH GLAZED ALUMINUM WINDOW WALL SYSTEM (WET & DRY GLAZED)

N.T.S.

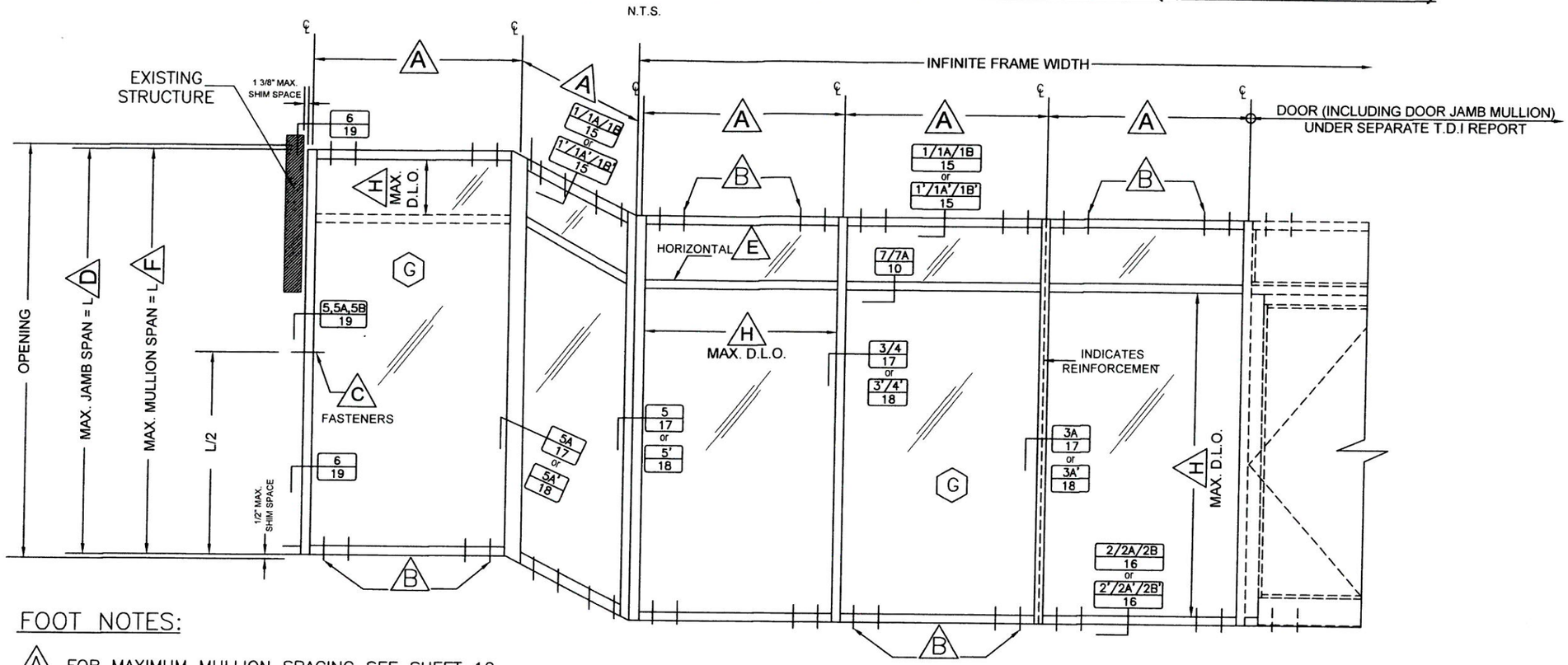

FOOT NOTES:

A. FOR MAXIMUM MULLION SPACING SEE SHEET 10.

B. FOR HEAD AND SILL FASTENERS QUANTITY, TYPES AND SPECS SEE SHEETS 11 & 12.

C. SEE SHEETS 13 & 14 FOR MAXIMUM DESIGN PRESSURE RATING FOR JAMB CONNECTED TO EXISTING STRUCTURE.

D. SEE SHEET 9 FOR MAXIMUM DESIGN PRESSURE RATING FOR JAMB NOT CONNECTED TO EXISTING STRUCTURE.

E. USE OF HORIZONTALS (SEE SECTIONS 7 & 7A/10) IS LIMITED BY SCHEDULE ON SHEET 10.

F. FOR MAXIMUM MULLION SPAN SEE SHEETS 7 & 8 SEE LIMITATIONS IN PRESSURE FOR DRY GLAZED CONDITIONS W/INSULATED GLASS ON SHEET 8.

G. FOR GLAZING DETAILS AND GLASS SCHEDULE SEE SHEETS 5 & 6.

H. FOR MAXIMUM D.L.O. DESIGN PRESSURE RATING FOR GLASS, SEE SCHEDULE ON SHEET 6.

TEXAS DEPARTMENT OF INSURANCE - 2006

SERIES FG-5100 FLUSH GLAZED ALUMINUM WINDOW WALL SYSTEM
LARGE & SMALL MISSILE IMPACT LAMINATED OR INSULATED WET & INSULATED DRY GLAZED

DRAWN BY: F.R.L
DATE: 12/4/14
DRAWING No: 14-086
SHEET 4 OF 20

Oldcastle BuildingEnvelope™
803 AIRPORT RD. TERRELL, TX 75160
www.OldcastleBE.com-Phone: 800-869-4567

REV. No.	DATE	DESCRIPTION

WALTER A. TILLIT Jr P.E.
PROFESSIONAL ENGINEER
6355 N.W 36 STREET, STE. 305
VIRGINIA GARDENS, FL 33166
PHONE(305) 871-1531 FAX (305) 871-1531
TEXAS LIC. # 90691
FIRM REGISTRATION # F-13790

P.E. SEAL/SIGNATURE/DATE

2/11/16

TYPICAL GLAZING DETAILS

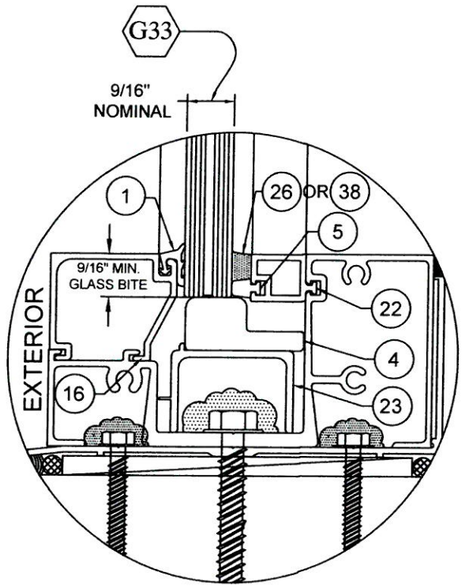

LAMINATED GLASS WET GLAZED

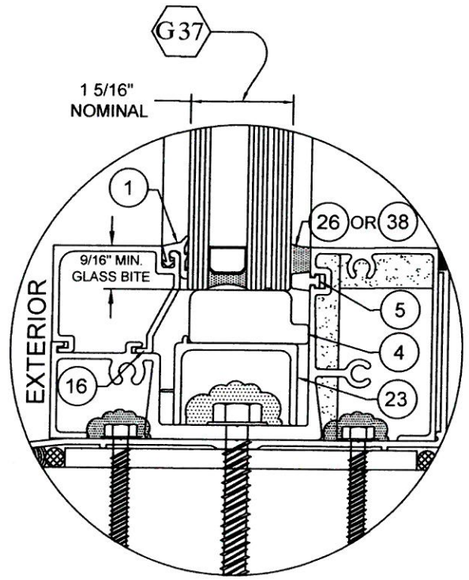

INSULATED LAMINATED GLASS WET GLAZED

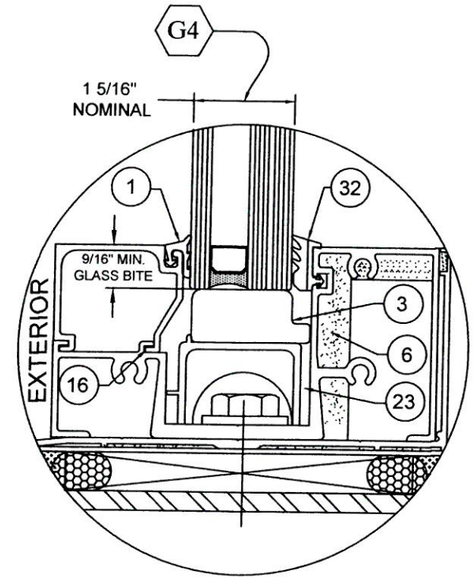

INSULATED LAMINATED GLASS DRY GLAZED*

GLASS SCHEDULE WET GLAZED

GLASS LABEL	GLASS COMPOSITION	MANUFACTURER NAME	MAXIMUM D.L.O.
G33	9/16" LAMINATED GLASS: 1/4" H.S. GLASS OUTBOARD .075" VANCEVA/STORMGLASS COMPOSITE INTERLAYER 1/4" H.S. GLASS INBOARD	OLDCASTLE	SEE SCHEDULE ON SHEET 6
G37	1 5/16" OVERALL THICKNESS INSULATED LAMINATED GLASS, CONSISTING OF 1/4" TEMPERED GLASS OUTBOARD 1/2" AIR SPACE 1/4" H.S. GLASS .075" VANCEVA/STORMGLASS COMPOSITE INTERLAYER 1/4" H.S. GLASS INBOARD	OLDCASTLE	SEE SCHEDULE ON SHEET 6

GLASS SCHEDULE DRY GLAZED

GLASS LABEL	GLASS COMPOSITION	MANUFACTURER NAME	MAXIMUM D.L.O.
G4	1 5/16" OVERALL THICKNESS INSULATED LAMINATED GLASS, CONSISTING OF 1/4" HS GLASS OB 1/2" SPACER AND 1/4" HS OVER 0.090 SENTRYGLASPLUS INTERLAYER OVER 1/4" HS GLASS	DUPONT	SEE SCHEDULE ON SHEET 6

* LIMITED TO +70 -70 psf. FOR MAXIMUM DESIGN PRESSURE RATING.

TEXAS DEPARTMENT OF INSURANCE - 2006

SERIES FG-5100 FLUSH GLAZED ALUMINUM WINDOW WALL SYSTEM
LARGE & SMALL MISSILE IMPACT LAMINATED OR INSULATED WET & INSULATED DRY GLAZED

Oldcastle BuildingEnvelope™
803 AIRPORT RD. TERRELL TX 75160
www.OldcastleBE.com-Phone 800-869-4567

REV. No	DATE	DESCRIPTION	REV. No	DATE	DESCRIPTION

DRAWN BY: F.R.L
DATE: 12/4/14
DRAWING No: 14-086
SHEET 5 OF 20

WALTER A. TILLIT Jr P.E.
PROFESSIONAL ENGINEER
6355 N.W 36 STREET, STE. 305
VIRGINIA GARDENS, FL 33166
PHONE(305) 871-1531 FAX (305) 871-1531
TEXAS LIC. # 90691
FIRM REGISTRATION # F-13790

P.E. SEAL/SIGNATURE/DATE

MAXIMUM DESIGN PRESSURE RATING (psf) SCHEDULE FOR A GIVEN GLASS TYPE AND GLASS PANEL DIMENSIONS "a" (in) x "b" (in) (SEE LEGEND)

LAMINATED GLASS TYPE ⟨G33⟩: WET GLAZED

DIMENSION "a"	DIMENSION "b"	MAXIMUM DESIGN PRESSURE RATING(psf)
24"	FROM 24" TO 120"	+70,−80
30"	FROM 30" TO 120"	+70,−80
36"	FROM 36" TO 120"	+70,−80
42"	FROM 42" TO 120"	+70,−80
48"	FROM 48" TO 108"	+70,−80
48"	62.5" TO 114"	+70,−78.5
48"	62.5" TO 120"	+70,−75.7
48"	62.5" TO 120"	+70,−73.7
54"	FROM 54" TO 96"	+70,−80
54"	62.5" TO 102"	+70,−78.3
54"	62.5" TO 108"	+70,−73.7
54"	62.5" TO 112"	+70,−71.2
62.5"	FROM 62.5" TO 90"	+70,−80

INSULATED GLASS TYPE ⟨G37⟩: WET GLAZED

DIMENSION "a"	DIMENSION "b"	MAXIMUM DESIGN PRESSURE RATING(psf)
24"	FROM 24" TO 101"	+90,−90
30"	FROM 30" TO 101"	+90,−90
36"	FROM 36" TO 101"	+90,−90
42"	FROM 42" TO 101"	+90,−90
48"	FROM 48" TO 101"	+90,−90
54"	FROM 54" TO 101"	+90,−90
62.5"	FROM 62.5" TO 101"	+90,−90

INSULATED GLASS TYPE ⟨G4⟩: DRY GLAZED

DIMENSION "a"	DIMENSION "b"	MAXIMUM DESIGN PRESSURE RATING(psf)
24"	FROM 24" TO 101"	+70,−70
30"	FROM 30" TO 101"	+70,−70
36"	FROM 36" TO 101"	+70,−70
42"	FROM 42" TO 101"	+70,−70
48"	FROM 48" TO 101"	+70,−70
54"	FROM 54" TO 101"	+70,−70
62.5"	FROM 62.5" TO 101"	+70,−70

DETERMINATION OF MAXIMUM DAY LIGHT OPENING (D.L.O.) AT EACH END OF GLASS GIVEN "a" & "b"

SIDE	MAXIMUM DAY LIGHT OPENING	
	(D.L.O.) Formula at Vertical & Horizontal Mullions	(D.L.O.) Formula at Jamb, Head & Sill Frames
MAX. D.L.O. (a) (SHORT SIDE)	"a"−5.00"	"a"−5.00"
MAX. D.L.O. (b) (LONG SIDE)	"b"−5.00"	"b"−5.00"

DIMENSIONS LEGEND *

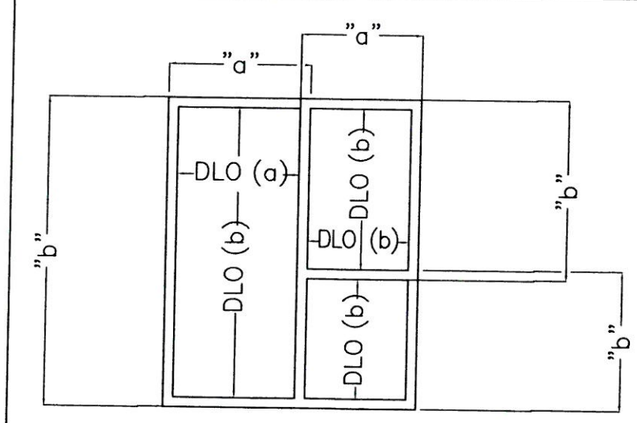

* SIDE "a" IS ALWAYS EQUAL OR SHORTER THAN "b"
"a" ,"b" MAY BE ORIENTED IN ANY DIRECTION.

TEXAS DEPARTMENT OF INSURANCE – 2006

SERIES FG-5100 FLUSH GLAZED
ALUMINUM WINDOW WALL SYSTEM
LARGE & SMALL MISSILE IMPACT LAMINATED OR INSULATED WET & INSULATED DRY GLAZED

Oldcastle BuildingEnvelope™
803 AIRPORT RD. TERRELL, TX 75160
www.OldcastleBE.com-Phone 800-869-4567

REV. No	DESCRIPTION	DATE
1	REVISION	1/4/16
2	REVISION	2/1/16

DRAWN BY: F.R.L
DATE 12/4/14
DRAWING No 14-086
SHEET 6 OF 20

WALTER A. TILLIT Jr P.E.
PROFESSIONAL ENGINEER
6355 N.W. 36 STREET, STE. 305
VIRGINIA GARDENS, FL 33166
PHONE(305) 871-1530 FAX (305) 871-1531
TEXAS LIC. # 90691
FIRM REGISTRATION # F-13790

2/1/16

P.E. SEAL/SIGNATURE/DATE

STANDARD, HEAVY & CORNER MULLION W/ LAMINATED GLASS

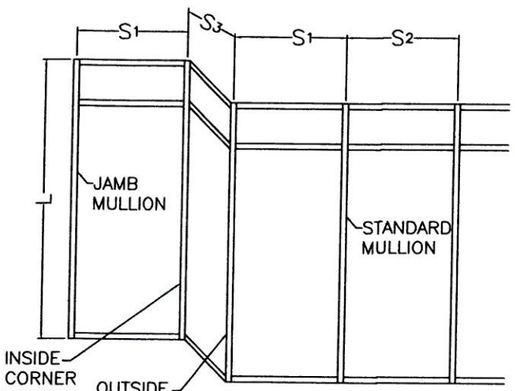

ISOMETRIC

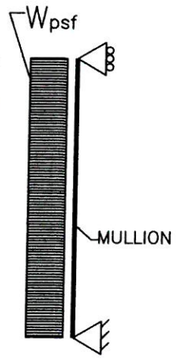

SIDE VIEW

L = MULLION SPAN

EFFECTIVE SPACING $b = \frac{S_1 + S_2}{2}$ (SEE SCHEDULE,)
(FOR STANDARD MULLION)

EFFECTIVE SPACING $b = \frac{S_1 + S_3}{2}$ (SEE SCHEDULE)
(FOR CORNER MULLION)

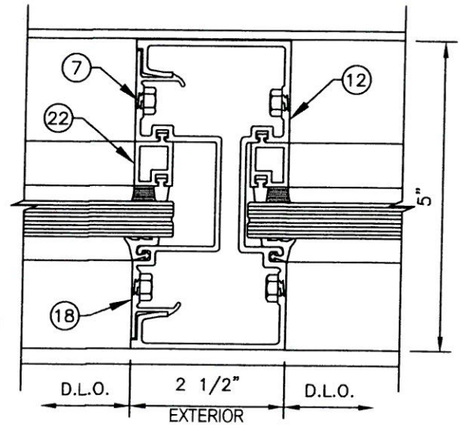

A — CASE:1 STANDARD MULLION (12) + (18) + (22)

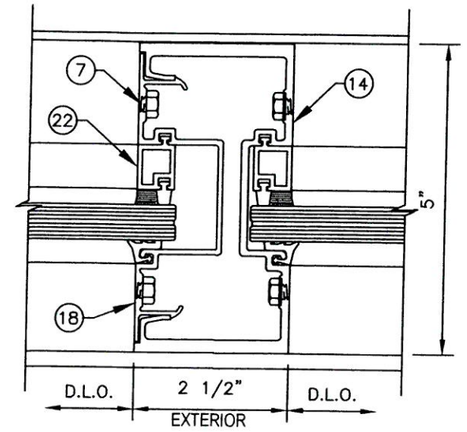

B — CASE:2 HEAVY MULLION (14) + (18) + (22)

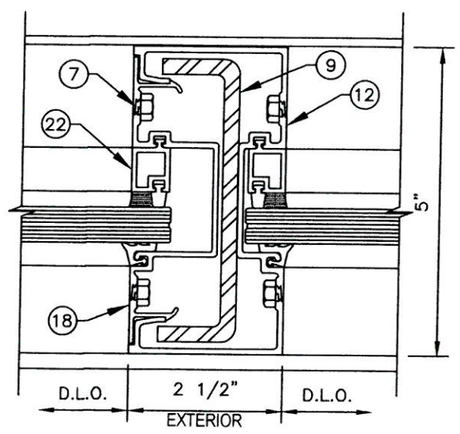

C — CASE:3 STANDARD MULLION (12) + (18) + (22) W/ STEEL REINFORCEMENT (9)

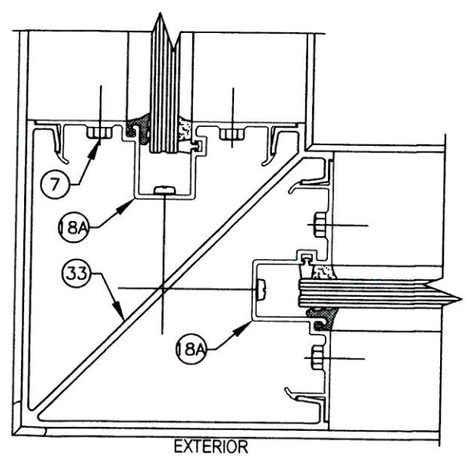

D — CASE:4 OUTSIDE (SHOWN)/INSIDE CORNER MULLION (33) + (18A)

CASE DEFINITIONS

CASE 1 : UNREINFORCED STANDARD MULLION A.

CASE 2 : UNREINFORCED HEAVY MULLION B.

CASE 3 : REINFORCED STANDARD MULLION C.

CASE 4 : OUTSIDE/INSIDE CORNER MULLION D.

* MAXIMUM DESIGN PRESSURE RATING FOR STANDARD & CORNER MULLION WILL AUTOMATICALLY QUALIFY DESIGN PRESSURE RATINGS FOR JAMBS W/ ANCHORAGE FOR ANY GIVEN MULLION SPACING. FOR MAX. JAMB SPAN W/O ANCHORAGE SEE SCHEDULE ON SHEET 9. JAMB ANCHORAGE (WHEN USED) SHALL BE PERFORMED AT MID HEIGHT OF JAMBS.

MAXIMUM DESIGN PRESSURE RATING FOR STANDARD, HEAVY & CORNER MULLIONS * MAXIMUM MULLION SPAN "L"(FT) SCHEDULE FOR A GIVEN DESIGN PRESSURE RATING AND A GIVEN MULLION EFFECTIVE SPACING "b"

MAXIMUM DESIGN PRESSURE RAITING (psf)	EFFECTIVE SPACING "b" (Ft-in)	CASE 1 UNREINFORCED STANDARD MULLION A "L" (FT-in)	CASE 2 UNREINFORCED HEAVY MULLION B "L" (FT-in)	CASE 3 REINFORCED STANDARD MULLION C "L" (FT-in)	CASE 4 OUTSIDE/INSIDE CORNER MULLION D "L" (FT-in)
60.0	3' - 6"	7' - 5"	10' - 0"	10' - 0"	10' - 0"
	4' - 0"	7' - 5"	10' - 0"	10' - 0"	10' - 0"
	4' - 6"	7' - 5"	10' - 0"	10' - 0"	10' - 0"
	5' - 0"	7' - 5"	9' - 8"	10' - 0"	10' - 0"
65.0	3' - 6"	7' - 5"	10' - 0"	10' - 0"	10' - 0"
	4' - 0"	7' - 5"	10' - 0"	10' - 0"	10' - 0"
	4' - 6"	7' - 5"	9' - 9"	10' - 0"	10' - 0"
	5' - 0"	7' - 5"	9' - 4"	10' - 0"	9' - 11"
70.0	3' - 6"	-	10' - 0"	10' - 0"	10' - 0"
	4' - 0"	-	9' - 11"	10' - 0"	10' - 0"
	4' - 6"	-	9' - 6"	10' - 0"	10' - 0"
	5' - 0"	-	9' - 0"	10' - 0"	9' - 9"
75.0	3' - 6"	-	10' - 0"	10' - 0"	10' - 0"
	4' - 0"	-	9' - 8"	10' - 0"	10' - 0"
	4' - 6"	-	9' - 2"	10' - 0"	9' - 10"
	5' - 0"	-	8' - 8"	10' - 0"	9' - 6"
80.0	3' - 6"	-	9' - 11"	10' - 0"	10' - 0"
	4' - 0"	-	9' - 5"	10' - 0"	10' - 0"
	4' - 6"	-	8' - 11"	10' - 0"	9' - 7"
	5' - 0"	-	8' - 5"	10' - 0"	9' - 3"
85.0	3' - 6"	-	-	10' - 0"	-
	4' - 0"	-	-	10' - 0"	-
	4' - 6"	-	-	10' - 0"	-
	5' - 0"	-	-	10' - 0"	-
90.0	3' - 6"	-	-	10' - 0"	-
	4' - 0"	-	-	10' - 0"	-
	4' - 6"	-	-	10' - 0"	-
	5' - 0"	-	-	10' - 0"	-

TEXAS DEPARTMENT OF INSURANCE - 2006

SERIES FG-5100 FLUSH GLAZED ALUMINUM WINDOW WALL SYSTEM
LARGE & SMALL MISSILE IMPACT LAMINATED OR INSULATED WET & INSULATED DRY GLAZED

Oldcastle BuildingEnvelope™
803 AIRPORT RD. TERRELL, TX 75160
www.OldcastleBE.com-Phone: 800-860-4567

REV. No	DATE	DESCRIPTION	REV. No	DATE	DESCRIPTION

DRAWN BY: F.R.L
DATE: 12/4/14
DRAWING No: 14-086
SHEET 7 OF 20

WALTER A. TILLIT Jr P.E.
PROFESSIONAL ENGINEER
6355 N.W 36 STREET, STE. 305
VIRGINIA GARDENS, FL 33166
PHONE(305) 871-1530 FAX (305) 871-1531
TEXAS LIC. # 90691
FIRM REGISTRATION # F-13790

P.E. SEAL/SIGNATURE/DATE

2/1/16

STANDARD, HEAVY & CORNER MULLION W/ INSULATED GLASS

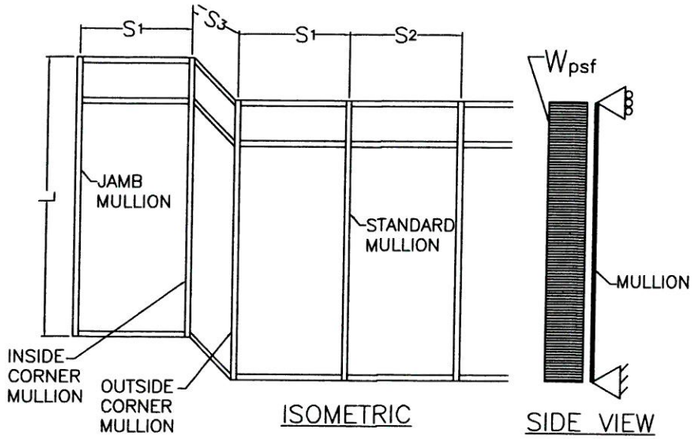

L = MULLION SPAN

EFFECTIVE SPACING $b = \frac{S_1 + S_2}{2}$ (SEE SCHEDULE,)
(FOR STANDARD MULLION)

EFFECTIVE SPACING $b = \frac{S_1 + S_3}{2}$ (SEE SCHEDULE)
(FOR CORNER MULLION)

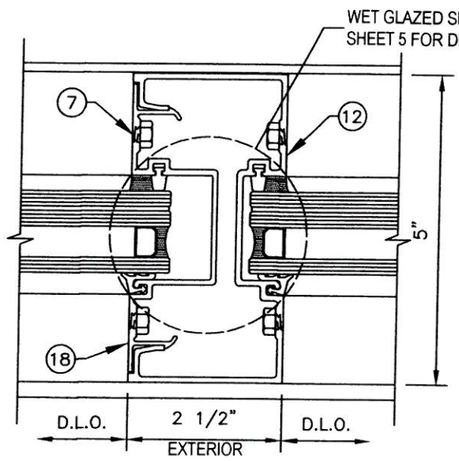

A' — CASE:1 STANDARD MULLION (12) + (18)

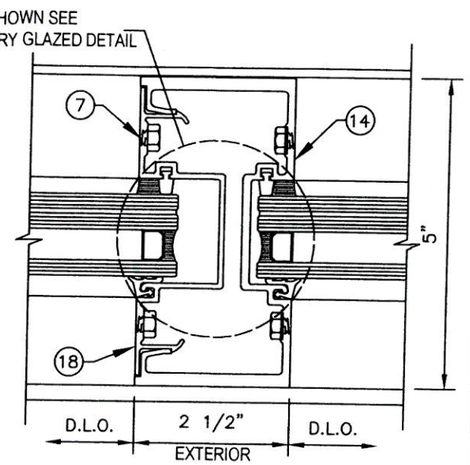

B' — CASE:2 HEAVY MULLION (14) + (18)

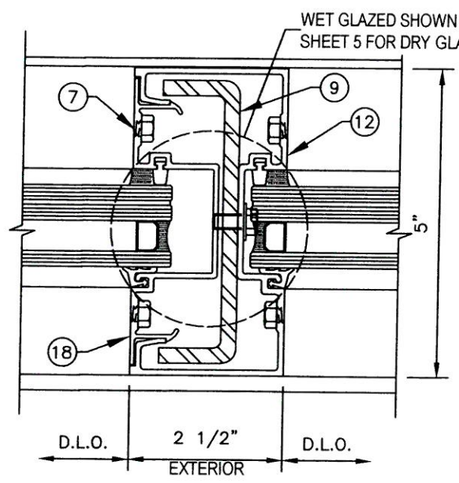

C' — CASE:3 STANDARD MULLION (12) + (18) W/ STEEL REINFORCEMENT (9)

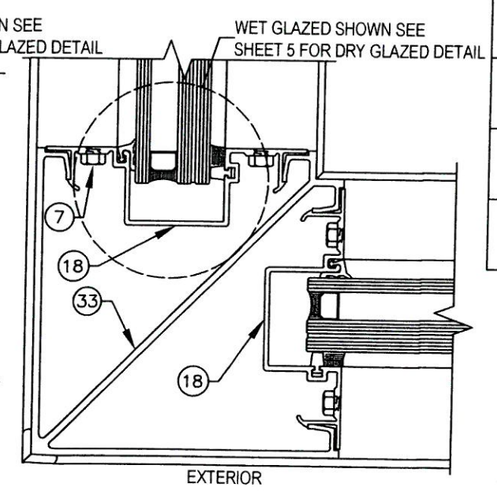

D' — CASE:4 OUTSIDE (SHOWN)/INSIDE CORNER MULLION (33) + (18)

CASE DEFINITIONS

CASE 1 : UNREINFORCED STANDARD MULLION A'.

CASE 2 : UNREINFORCED HEAVY MULLION B'.

CASE 3 : REINFORCED STANDARD MULLION C'.

CASE 4 : OUTSIDE/INSIDE CORNER MULLION D'.

* MAXIMUM DESIGN PRESSURE RATING FOR STANDARD & CORNER MULLION WILL AUTOMATICALLY QUALIFY DESIGN PRESSURE RATINGS FOR JAMBS W/ ANCHORAGE FOR ANY GIVEN MULLION SPACING. FOR MAX. JAMB SPAN W/O ANCHORAGE SEE SCHEDULE ON SHEET 9. JAMB ANCHORAGE (WHEN USED) SHALL BE PERFORMED AT MID HEIGHT OF JAMBS.

** MAXIMUM DESIGN PRESSURE RATING FOR DRY GLAZED MULLION INSTALLATIONS IS +70, −70 psf.

MAXIMUM DESIGN PRESSURE RATING FOR STANDARD, HEAVY & CORNER MULLIONS *
MAXIMUM MULLION SPAN "L"(FT)
SCHEDULE FOR A GIVEN DESIGN PRESSURE RATING AND A GIVEN MULLION EFFECTIVE SPACING "b"

MAXIMUM DESIGN PRESSURE RAITING (psf)	EFFECTIVE SPACING "b" (Ft-in)	CASE 1 UNREINFORCED STANDARD MULLION A' "L" (FT-in)	CASE 2 UNREINFORCED HEAVY MULLION B' "L" (FT-in)	CASE 3 REINFORCED STANDARD MULLION C' "L" (FT-in)	CASE 4 OUTSIDE/INSIDE CORNER MULLION D' "L" (FT-in)
60.0	3' - 6"	7' - 5"	10' - 0"	10' - 0"	10' - 0"
	4' - 0"	7' - 5"	10' - 0"	10' - 0"	10' - 0"
	4' - 6"	7' - 5"	10' - 0"	10' - 0"	10' - 0"
	5' - 0"	7' - 5"	9' - 8"	10' - 0"	10' - 0"
65.0	3' - 6"	7' - 5"	10' - 0"	10' - 0"	10' - 0"
	4' - 0"	7' - 5"	10' - 0"	10' - 0"	10' - 0"
	4' - 6"	7' - 5"	9' - 9"	10' - 0"	10' - 0"
	5' - 0"	7' - 5"	9' - 4"	10' - 0"	9' - 11"
70.0**	3' - 6"	-	10' - 0"	10' - 0"	10' - 0"
	4' - 0"	-	9' - 11"	10' - 0"	10' - 0"
	4' - 6"	-	9' - 6"	10' - 0"	10' - 0"
	5' - 0"	-	9' - 0"	10' - 0"	9' - 9"
75.0	3' - 6"	-	10' - 0"	10' - 0"	10' - 0"
	4' - 0"	-	9' - 8"	10' - 0"	10' - 0"
	4' - 6"	-	9' - 2"	10' - 0"	9' - 10"
	5' - 0"	-	8' - 8"	10' - 0"	9' - 6"
80.0	3' - 6"	-	9' - 11"	10' - 0"	10' - 0"
	4' - 0"	-	9' - 5"	10' - 0"	10' - 0"
	4' - 6"	-	8' - 11"	10' - 0"	9' - 7"
	5' - 0"	-	8' - 5"	10' - 0"	9' - 3"
85.0	3' - 6"	-	-	10' - 0"	-
	4' - 0"	-	-	10' - 0"	-
	4' - 6"	-	-	10' - 0"	-
	5' - 0"	-	-	10' - 0"	-
90.0	3' - 6"	-	-	10' - 0"	-
	4' - 0"	-	-	10' - 0"	-
	4' - 6"	-	-	10' - 0"	-
	5' - 0"	-	-	10' - 0"	-

TEXAS DEPARTMENT OF INSURANCE – 2006

SERIES FG-5100 FLUSH GLAZED ALUMINUM WINDOW WALL SYSTEM
LARGE & SMALL MISSILE IMPACT LAMINATED OR INSULATED WET & INSULATED DRY GLAZED

DRAWN BY: F.R.L
DATE: 12/4/14
DRAWING No: 14-086
SHEET 8 OF 20

Oldcastle BuildingEnvelope™
803 AIRPORT RD. TERRELL TX 75160
www.OldcastleBE.com-Phone 800-869-4567

WALTER A. TILLIT Jr P.E.
PROFESSIONAL ENGINEER
6355 N.W 36 STREET, STE. 305
VIRGINIA GARDENS, FL 33166
PHONE(305) 871-1530 FAX (305) 871-1531
TEXAS LIC. # 90691
FIRM REGISTRATION # F-13790

REV. No	DATE	DESCRIPTION	REV. No	DATE	DESCRIPTION

P.E. SEAL/SIGNATURE/DATE

REINFORCED JAMB MULLION W/ LAMINATED OR INSULATED GLASS (WET GLAZED) *

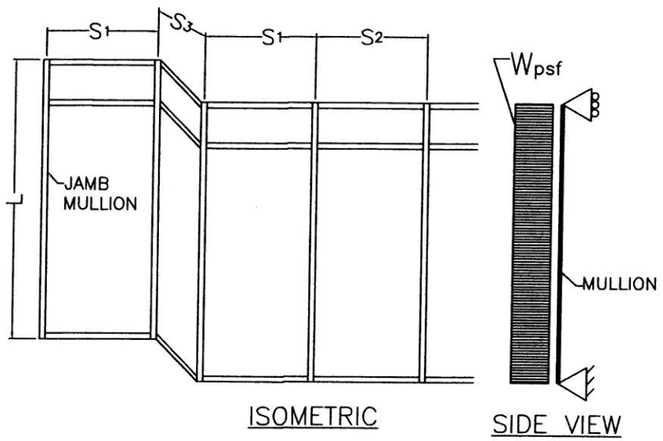

L = MULLION SPAN

EFFECTIVE SPACING $b = \frac{S_1}{2}$ (SEE SCHEDULE)

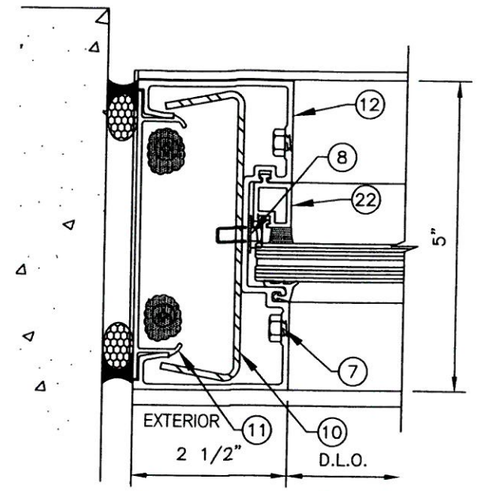

E	CASE:1 JAMB MULLION (12) + (11) + (22) W/ STEEL REINFORCEMENT (10)

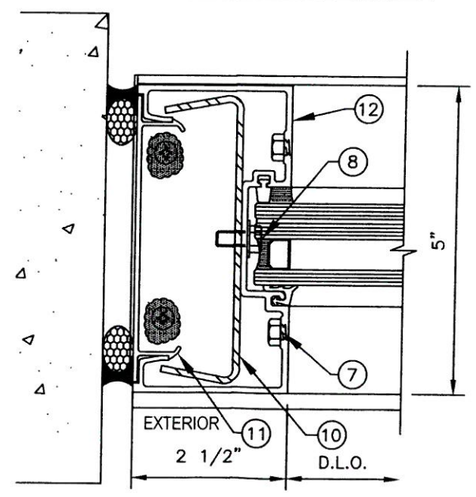

E'	CASE:2 JAMB MULLION (12) + (11) W/ STEEL REINFORCEMENT (10)

CASE DEFINITIONS

CASE 1 : REINFORCED JAMB MULLION FOR LAMINATED GLASS E.

CASE 2 : REINFORCED JAMB MULLION FOR INSULATED GLASS E'.

* SEE SHEETS 13 & 14 FOR SPECS FOR JAMB ATTACHED TO EXISTING WALL W/WET OR DRY GLAZED WITH LAMINATED OR INSULATED GLASS.
- JAMBS ATTACHED TO EXISTING WALL HOLDING INSULATED GLASS MAY BE WET OR DRY GLAZED.
- JAMBS ATTACHED TO EXISTING WALL HOLDING LAMINATED GLASS MUST ALWAYS BE WET GLAZED.

MAXIMUM DESIGN PRESSURE RATING FOR REINFORCED JAMB MULLION UNATTACHED MAXIMUM JAMB MULLION SPAN "L"(FT) SCHEDULE FOR A GIVEN DESIGN PRESSURE RATING AND A GIVEN JAMB MULLION EFFECTIVE SPACING "b"

MAXIMUM DESIGN PRESSURE RAITING (psf)	EFFECTIVE SPACING "b" (Ft-in)	CASE 1 REINFORCED JAMB MULLION E "L" (FT-in)	CASE 2 REINFORCED JAMB MULLION E' "L" (FT-in)
60.0	1' - 9"	10' - 0"	10' - 0"
	2' - 0"	10' - 0"	10' - 0"
	2' - 3"	10' - 0"	10' - 0"
	2' - 6"	10' - 0"	10' - 0"
65.0	1' - 9"	10' - 0"	10' - 0"
	2' - 0"	10' - 0"	10' - 0"
	2' - 3"	10' - 0"	10' - 0"
	2' - 6"	10' - 0"	10' - 0"
70.0	1' - 9"	10' - 0"	10' - 0"
	2' - 0"	10' - 0"	10' - 0"
	2' - 3"	10' - 0"	10' - 0"
	2' - 6"	10' - 0"	10' - 0"
75.0	1' - 9"	10' - 0"	10' - 0"
	2' - 0"	10' - 0"	10' - 0"
	2' - 3"	10' - 0"	10' - 0"
	2' - 6"	10' - 0"	10' - 0"
80.0	1' - 9"	10' - 0"	10' - 0"
	2' - 0"	10' - 0"	10' - 0"
	2' - 3"	10' - 0"	10' - 0"
	2' - 6"	10' - 0"	10' - 0"
85.0	1' - 9"	10' - 0"	10' - 0"
	2' - 0"	10' - 0"	10' - 0"
	2' - 3"	10' - 0"	10' - 0"
	2' - 6"	10' - 0"	10' - 0"
90.0	1' - 9"	10' - 0"	10' - 0"
	2' - 0"	10' - 0"	10' - 0"
	2' - 3"	10' - 0"	10' - 0"
	2' - 6"	10' - 0"	10' - 0"

TEXAS DEPARTMENT OF INSURANCE – 2006

SERIES FG-5100 FLUSH GLAZED ALUMINUM WINDOW WALL SYSTEM
LARGE & SMALL MISSILE IMPACT LAMINATED OR INSULATED WET & INSULATED DRY GLAZED

Oldcastle BuildingEnvelope™
803 AIRPORT RD. TERRELL, TX 75160
www.OldcastleBE.com-Phone 800-869-4567

REV. No	DATE	DESCRIPTION	REV. No	DATE	DESCRIPTION	DATE

DRAWN BY: F.R.L
DATE 12/4/14
DRAWING No 14-086
SHEET 9 OF 20

WALTER A. TILLIT Jr P.E.
PROFESSIONAL ENGINEER
6355 N.W 36 STREET, STE. 305
VIRGINIA GARDENS, FL 33166
PHONE(305) 871-1531 FAX (305) 871-1531
TEXAS LIC. # 90691
FIRM REGISTRATION # F-13790

P.E. SEAL/SIGNATURE/DATE

HORIZONTAL W/ LAMINATED OR INSULATED GLASS

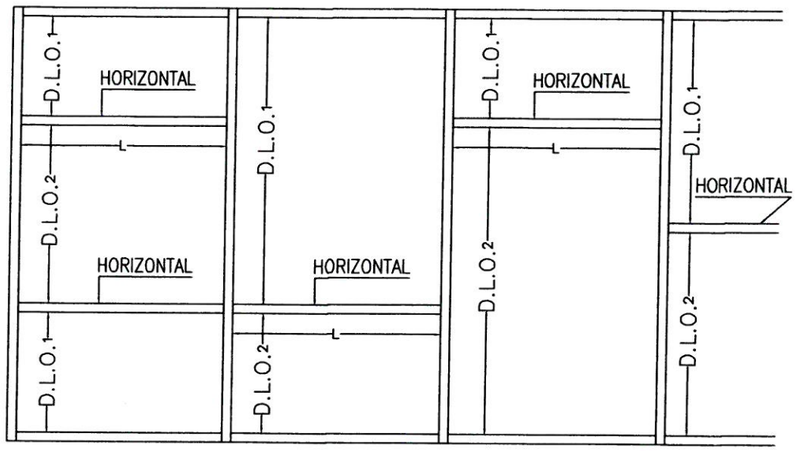

WINDOW WALL ELEVATION W/ HORIZONTALS

"L" = MAXIMUM SPAN FOR HORIZONTAL

"D.L.O." = EFFECTIVE DAY LIGHT OPENING FOR HORIZONTAL = $\frac{D.L.O._1 + D.L.O._2}{2}$

CASE DEFINITIONS

CASE 1 : UNREINFORCED HORIZONTAL FOR LAMINATED GLASS F.

CASE 2 : UNREINFORCED HORIZONTAL FOR INSULATED GLASS F'.

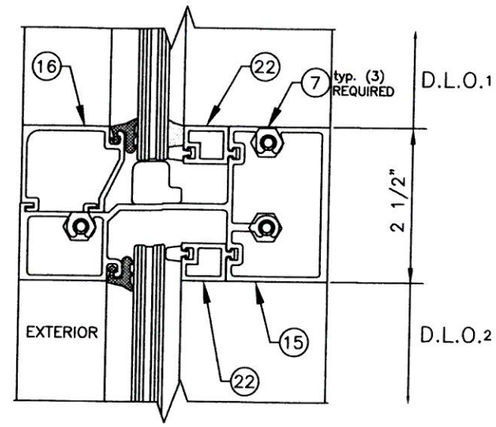

F	CASE:1 STANDARD MULLION 15 + 16 + 22

7
HORIZONTAL

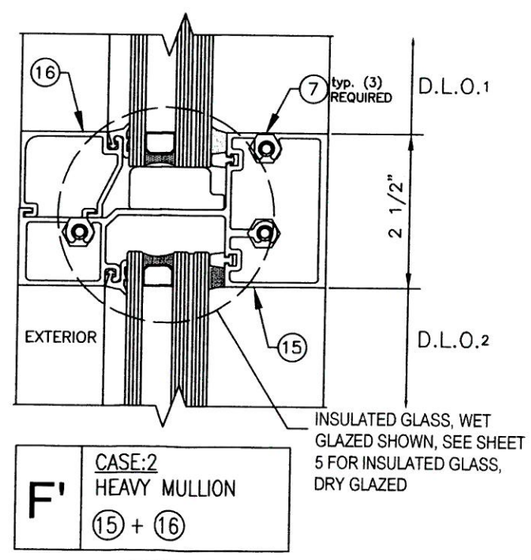

F'	CASE:2 HEAVY MULLION 15 + 16

7A
HORIZONTAL

MAXIMUM DESIGN PRESSURE RATING FOR HORIZONTAL MAXIMUM SPAN "L"(FT) SCHEDULE FOR A GIVEN DESIGN PRESSURE RATING AND A GIVEN EFFECTIVE SPACING "b"

MAXIMUM DESIGN PRESSURE RAITING (psf)	EFFECTIVE DAY LIGHT OPENING "DLO"(FT-in)	CASE 1 MAXIMUM UNREINFORCED HORIZONTAL F "L" (FT-in)	CASE 2 MAXIMUM UNREINFORCED HORIZONTAL F' "L" (FT-in)
90.0	2' - 0"	5' - 0"	5' - 0"
	2' - 6"	5' - 0"	5' - 0"
	3' - 0"	5' - 0"	5' - 0"
	3' - 6"	5' - 0"	5' - 0"
	4' - 0"	5' - 0"	5' - 0"
	4' - 6"	5' - 0"	5' - 0"
	5' - 0"	5' - 0"	5' - 0"

TEXAS DEPARTMENT OF INSURANCE - 2006

SERIES FG-5100 FLUSH GLAZED ALUMINUM WINDOW WALL SYSTEM
LARGE & SMALL MISSILE IMPACT LAMINATED OR INSULATED WET & INSULATED DRY GLAZED

Oldcastle BuildingEnvelope™
803 AIRPORT RD. TERRELL TX 75160
www.OldcastleBE.com-Phone 800-869-4567

DRAWN BY: F.R.L	14-086	SHEET 10 OF 20
DATE 12/4/14	DRAWING No	

REV. No	DATE	DESCRIPTION	REV. No	DATE	DESCRIPTION

WALTER A. TILLIT Jr P.E.
PROFESSIONAL ENGINEER
6355 N.W 36 STREET, STE. 305
VIRGINIA GARDENS, FL 33166
PHONE(305) 871-1530 FAX (305) 871-1531
TEXAS LIC. # 90691
FIRM REGISTRATION # F-13790

2/11/14

P.E. SEAL/SIGNATURE/DATE

MAXIMUM DESIGN PRESSURE RATING FOR MULLION CONNECTIONS (B)

MAXIMUM MULLION SPAN	EFFECTIVE SPACING FOR MULLION	EFFECTIVE SPACING FOR JAMB MULLION	MAXIMUM DESIGN PRESSURE RATING (psf)					
			POURED CONCRETE (Min. fc = 3ksi) SUBSTRATE			1/4" Min. THK ASTM A-36 STEEL SUBSTRATE	DOUBLE BUCK 3" Min. THK. (G=0.55) WOOD SUBSTRATE	DOUBLE BUCK 2" Min. THK. (G=0.55) WOOD SUBSTRATE
			FASTENERS TYPES			FASTENERS	FASTENERS	FASTENERS
"L" (Ft-in)	"b"(Ft-in)	"b"(Ft-in)	A	B	C	D	E	E'
			4 Anchors	4 Anchors	4 Anchors	4 Bolts	10 Lag screws	10 Lag screws
6' - 2"	3' - 6"	1' - 9"	90.0	90.0	90.0	90.0	90.0	90.0
	4' - 0"	2' - 0"	90.0	90.0	90.0	90.0	90.0	90.0
	4' - 6"	2' - 3"	90.0	90.0	90.0	90.0	90.0	90.0
	5' - 0"	2' - 6"	90.0	90.0	90.0	90.0	90.0	90.0
6' - 6"	3' - 6"	1' - 9"	90.0	90.0	90.0	90.0	90.0	90.0
	4' - 0"	2' - 0"	90.0	90.0	90.0	90.0	90.0	90.0
	4' - 6"	2' - 3"	90.0	90.0	90.0	90.0	90.0	90.0
	5' - 0"	2' - 6"	90.0	90.0	90.0	90.0	90.0	90.0
7' - 0"	3' - 6"	1' - 9"	90.0	90.0	90.0	90.0	90.0	90.0
	4' - 0"	2' - 0"	90.0	90.0	90.0	90.0	90.0	90.0
	4' - 6"	2' - 3"	90.0	90.0	90.0	90.0	90.0	90.0
	5' - 0"	2' - 6"	90.0	90.0	90.0	90.0	90.0	90.0
7' - 6"	3' - 6"	1' - 9"	90.0	90.0	90.0	90.0	90.0	90.0
	4' - 0"	2' - 0"	90.0	90.0	90.0	90.0	90.0	90.0
	4' - 6"	2' - 3"	90.0	90.0	90.0	90.0	90.0	90.0
	5' - 0"	2' - 6"	90.0	90.0	90.0	90.0	90.0	90.0
8' - 0"	3' - 6"	1' - 9"	90.0	90.0	90.0	90.0	90.0	90.0
	4' - 0"	2' - 0"	90.0	90.0	90.0	90.0	90.0	90.0
	4' - 6"	2' - 3"	90.0	90.0	90.0	90.0	90.0	90.0
	5' - 0"	2' - 6"	90.0	90.0	90.0	90.0	90.0	90.0
8' - 6"	3' - 6"	1' - 9"	90.0	90.0	90.0	90.0	90.0	90.0
	4' - 0"	2' - 0"	90.0	90.0	90.0	90.0	90.0	90.0
	4' - 6"	2' - 3"	90.0	90.0	90.0	90.0	90.0	90.0
	5' - 0"	2' - 6"	90.0	90.0	90.0	90.0	90.0	90.0
9' - 0"	3' - 6"	1' - 9"	90.0	90.0	90.0	90.0	90.0	90.0
	4' - 0"	2' - 0"	90.0	90.0	90.0	90.0	90.0	90.0
	4' - 6"	2' - 3"	90.0	90.0	90.0	90.0	90.0	90.0
	5' - 0"	2' - 6"	90.0	90.0	90.0	90.0	90.0	90.0
9' - 6"	3' - 6"	1' - 9"	90.0	90.0	90.0	90.0	90.0	90.0
	4' - 0"	2' - 0"	90.0	90.0	90.0	90.0	90.0	90.0
	4' - 6"	2' - 3"	90.0	90.0	90.0	90.0	90.0	90.0
	5' - 0"	2' - 6"	90.0	90.0	90.0	90.0	89.5	90.0
10' - 0"	3' - 6"	1' - 9"	90.0	90.0	90.0	90.0	90.0	90.0
	4' - 0"	2' - 0"	90.0	90.0	90.0	90.0	90.0	90.0
	4' - 6"	2' - 3"	90.0	90.0	90.0	90.0	90.0	90.0
	5' - 0"	2' - 6"	90.0	90.0	87.5	90.0	85.0	90.0

MULLION CONNECTIONS

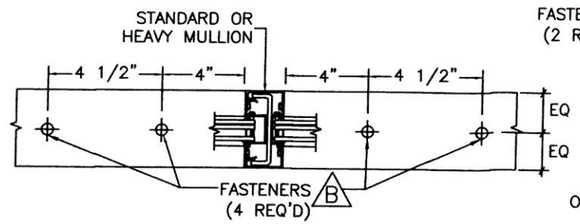

SCHEMATIC CONCRETE & STEEL CONNECTION DETAIL
(AT STANDARD OR HEAVY MULLION)

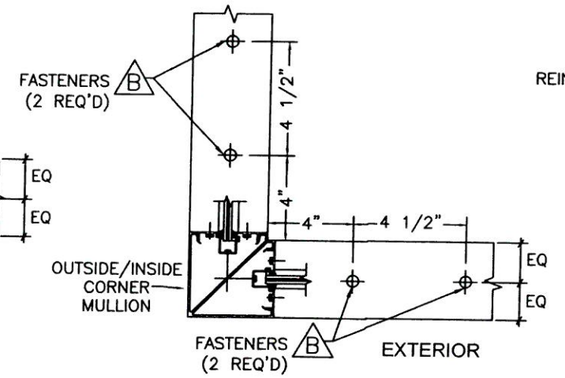

SCHEMATIC CONCRETE & STEEL CONNECTION DETAIL
(AT OUTSIDE/INSIDE CORNER MULLION)

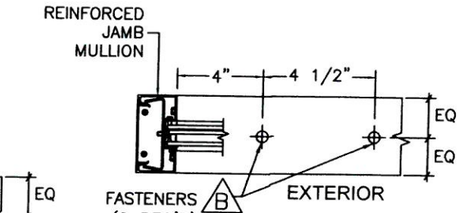

SCHEMATIC CONCRETE & STEEL CONNECTION DETAIL
(AT JAMB MULLION)

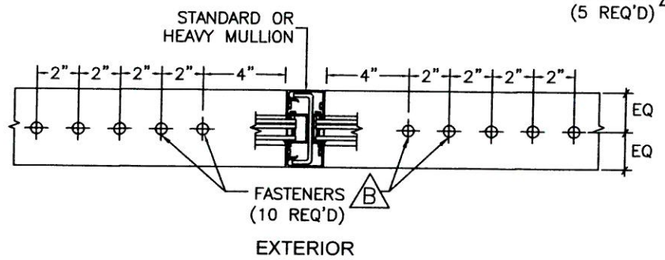

SCHEMATIC WOOD CONNECTION DETAIL
(AT STANDARD OR HEAVY MULLION)

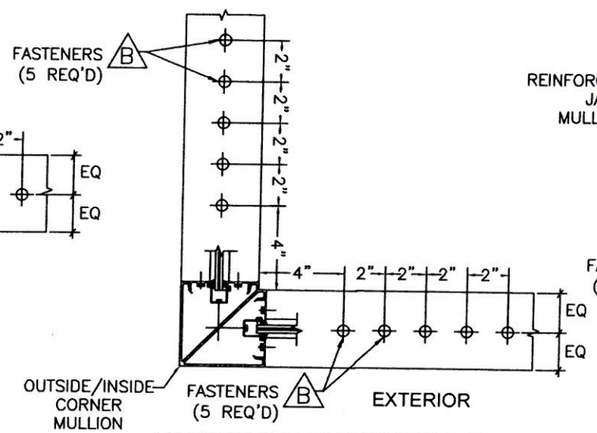

SCHEMATIC WOOD CONNECTION DETAIL
(AT OUTSIDE/INSIDE CORNER MULLION)

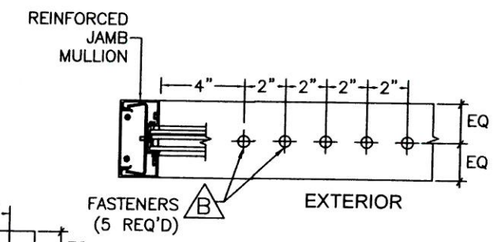

SCHEMATIC WOOD CONNECTION DETAIL
(AT JAMB MULLION)

(B) FASTENERS TYPES AND SUBSTRATES REQUIREMENTS W/ 4 1/2" MIN. E.D., BEYOND ANY FINISH MATERIAL

A - 3/8"Ø HILTI KWIK BOLT TZ ANCHOR W/ 2" Min. EMBEDMENT INTO 6" Min. THICK POURED CONCRETE (Min. f'c = 3 ksi).

B - 3/8"Ø POWER FASTENERS TAPPER ANCHOR W/ 1 3/4" Min. EMBEDMENT INTO POURED CONCRETE (Min. f'c = 3 ksi)

C - 3/8"Ø HILTI HUS-H SCREW ANCHOR W/ 2" Min. EMBEDMENT INTO POURED CONCRETE (Min. f'c = 3 ksi)

D - 3/8"Ø TYPE "F" BOLT OR 3/8"Ø -16 ELCO CONSTRUCTION PRODUCTS DRILL FLEX SCREW TO 1/4" Min. THK. ASTM A-36 STEEL.

E - 3/8"Ø LAG SCREWS TO DOUBLE 2 x WOOD BUCK (G=0.55) W/ 3" Min. PENETRATION INTO WOOD.

E' - 1/2"Ø LAG SCREWS TO DOUBLE 2 x WOOD BUCK (G=0.55) W/ 3" Min. PENETRATION INTO WOOD.

TEXAS DEPARTMENT OF INSURANCE - 2006

SERIES FG-5100 FLUSH GLAZED ALUMINUM WINDOW WALL SYSTEM
LARGE & SMALL MISSILE IMPACT LAMINATED OR INSULATED WET & INSULATED DRY GLAZED

DRAWN BY: F.R.L
DATE: 12/1/14
DRAWING No: 14-086
SHEET 11 OF 20

Oldcastle BuildingEnvelope™
803 AIRPORT RD. TERRELL TX 75160
www.OldcastleBE.com-Phone: 800-869-4567

REV. No.	DATE	DESCRIPTION

WALTER A. TILLIT Jr P.E.
PROFESSIONAL ENGINEER
6355 N.W 36 STREET, STE. 305
VIRGINIA GARDENS, FL 33166
PHONE(305) 871-1530 FAX (305) 871-1531
TEXAS LIC. # 90691
FIRM REGISTRATION # F-13790

P.E. SEAL/SIGNATURE/DATE

MAXIMUM DESIGN PRESSURE RATING FOR MULLION CONNECTIONS (B)

MAXIMUM MULLION SPAN "L" (Ft-in)	EFFECTIVE SPACING FOR MULLION "b"(Ft-in)	EFFECTIVE SPACING FOR JAMB MULLION "b"(Ft-in)	MAXIMUM DESIGN PRESSURE RATING (psf)					
			POURED CONCRETE (Min. fc = 3ksi) SUBSTRATE			GROUT FILLED CONCRETE BLOCK SUBSTRATE		12 GAGE (0.108" Min. THK) Fy=33 ksi STEEL SUBSTRATE
			F	G	H	G'	H'	I
			4 Anchors	4 Anchors	4 Anchors	6 Anchors	6 Anchors	4 Bolts
6' - 2"	3' - 6"	1' - 9"	90.0	90.0	90.0	90.0	90.0	90.0
	4' - 0"	2' - 0"	90.0	90.0	90.0	90.0	90.0	90.0
	4' - 6"	2' - 3"	90.0	90.0	90.0	90.0	90.0	90.0
	5' - 0"	2' - 6"	90.0	90.0	90.0	87.6	90.0	90.0
6' - 6"	3' - 6"	1' - 9"	90.0	90.0	90.0	90.0	90.0	90.0
	4' - 0"	2' - 0"	90.0	90.0	90.0	90.0	90.0	90.0
	4' - 6"	2' - 3"	90.0	90.0	90.0	90.0	90.0	90.0
	5' - 0"	2' - 6"	90.0	90.0	90.0	83.1	90.0	90.0
7' - 0"	3' - 6"	1' - 9"	90.0	90.0	90.0	90.0	90.0	90.0
	4' - 0"	2' - 0"	90.0	90.0	90.0	90.0	90.0	90.0
	4' - 6"	2' - 3"	90.0	90.0	90.0	85.7	90.0	90.0
	5' - 0"	2' - 6"	90.0	90.0	90.0	77.1	90.0	90.0
7' - 6"	3' - 6"	1' - 9"	90.0	90.0	90.0	90.0	90.0	90.0
	4' - 0"	2' - 0"	90.0	90.0	90.0	90.0	90.0	90.0
	4' - 6"	2' - 3"	90.0	90.0	90.0	80.0	90.0	90.0
	5' - 0"	2' - 6"	90.0	90.0	90.0	72.0	90.0	90.0
8' - 0"	3' - 6"	1' - 9"	90.0	90.0	90.0	90.0	90.0	90.0
	4' - 0"	2' - 0"	90.0	90.0	90.0	84.4	90.0	90.0
	4' - 6"	2' - 3"	90.0	90.0	90.0	75.0	90.0	90.0
	5' - 0"	2' - 6"	90.0	90.0	90.0	67.5	90.0	90.0
8' - 6"	3' - 6"	1' - 9"	90.0	90.0	90.0	90.0	90.0	90.0
	4' - 0"	2' - 0"	90.0	90.0	90.0	79.4	90.0	90.0
	4' - 6"	2' - 3"	90.0	90.0	90.0	70.6	90.0	90.0
	5' - 0"	2' - 6"	90.0	85.2	90.0	63.5	90.0	90.0
9' - 0"	3' - 6"	1' - 9"	90.0	90.0	90.0	85.7	90.0	90.0
	4' - 0"	2' - 0"	90.0	90.0	90.0	75.0	90.0	90.0
	4' - 6"	2' - 3"	90.0	89.4	90.0	66.7	90.0	90.0
	5' - 0"	2' - 6"	90.0	80.4	90.0	60.0	90.0	90.0
9' - 6"	3' - 6"	1' - 9"	90.0	90.0	90.0	81.2	90.0	90.0
	4' - 0"	2' - 0"	90.0	90.0	90.0	71.1	90.0	90.0
	4' - 6"	2' - 3"	90.0	84.7	90.0	63.2	90.0	90.0
	5' - 0"	2' - 6"	90.0	76.2	90.0	56.8	90.0	90.0
10' - 0"	3' - 6"	1' - 9"	90.0	90.0	90.0	77.1	90.0	90.0
	4' - 0"	2' - 0"	90.0	90.0	90.0	67.5	90.0	90.0
	4' - 6"	2' - 3"	90.0	80.4	90.0	60.0	90.0	90.0
	5' - 0"	2' - 6"	85.7	72.4	87.5	54.0	90.0	90.0

MULLION CONNECTIONS (CONTINUED)

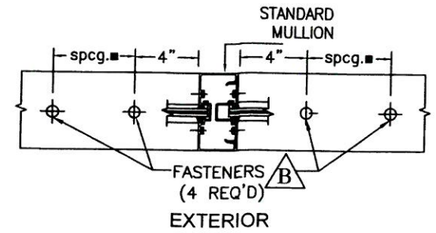

SCHEMATIC CONCRETE & 12 GAGE STEEL CONNECTION DETAIL
(AT STANDARD MULLION)

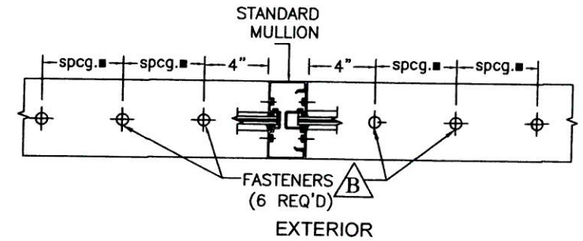

SCHEMATIC GROUT-FILLED CONCRETE BLOCK CONNECTION DETAIL
(AT STANDARD MULLION)

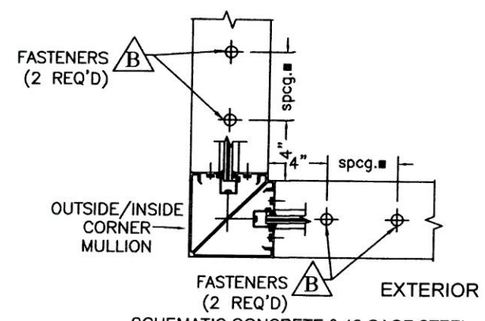

SCHEMATIC CONCRETE & 12 GAGE STEEL CONNECTION DETAIL
(AT OUTSIDE/INSIDE CORNER MULLION)

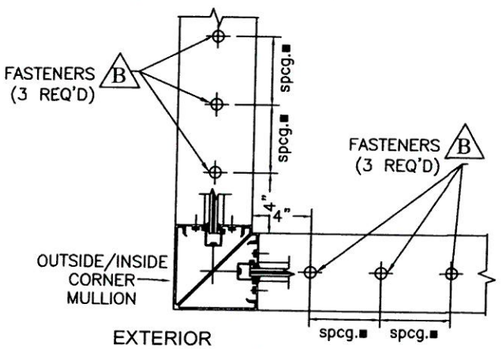

SCHEMATIC GROUT-FILLED CONCRETE BLOCK CONNECTION DETAIL
(AT OUTSIDE/INSIDE CORNER MULLION)

(B) FASTENERS TYPES AND SUBSTRATES REQUIREMENTS W/ 2 3/4" MIN. E.D., BEYOND ANY FINISH MATERIAL

F - 3/8"Ø HILTI KWIK BOLT TZ ANCHOR W/ 2" Min. EMBEDMENT INTO 6" Min. THICK POURED CONCRETE (Min. f'c = 3 ksi).

G - 3/8"Ø POWER FASTENERS TAPPER ANCHOR W/ 1 3/4" Min. EMBEDMENT INTO POURED CONCRETE (Min. f'c = 3 ksi).

H - 3/8"Ø HILTI HUS-H SCREW ANCHOR W/ 2" Min. EMBEDMENT INTO POURED CONCRETE (Min. f'c = 3 ksi).

G' - 3/8"Ø POWER FASTENERS TAPPER ANCHOR W/ 1 3/4" Min. EMBEDMENT INTO GROUT FILLED CONCRETE BLOCK.

H' - 3/8"Ø HILTI HUS-H SCREW ANCHOR W/ 2 3/4" Min. EMBEDMENT INTO GROUT FILLED CONCRETE BLOCK.

I - 3/8"Ø TYPE "F" BOLT OR 3/8"Ø -13 SAE GRADE 5 GALVANIZED STEEL HHB THRU BOLT W/ NUT & LOCK WASHER & 2" MIN. EDGE DISTANCE TO 12 GAGE (0.108" MIN THK.) Fy=33 ksi STEEL.

■ MIN. SPACING (spcg.) REQUIRED FOR DIFFERENT SUBSTRATES

-POURED CONCRETE:	4 1/2" MIN. O.C.
-GROUT FILLED C.B.:	8" MIN. O.C.
-STEEL:	4 1/2" MIN. O.C.

TEXAS DEPARTMENT OF INSURANCE - 2006

SERIES FG-5100 FLUSH GLAZED ALUMINUM WINDOW WALL SYSTEM
LARGE & SMALL MISSILE IMPACT LAMINATED OR INSULATED WET & INSULATED DRY GLAZED

DRAWN BY: F.R.L
DATE: 12/4/14
DRAWING No: 14-086
SHEET 12 OF 20

Oldcastle BuildingEnvelope™
803 AIRPORT RD. TERRELL TX 75160
www.OldcastleBE.com-Phone 800-869-4567

REV. No	DESCRIPTION	DATE	REV. No	DESCRIPTION	DATE

WALTER A. TILLIT Jr P.E.
PROFESSIONAL ENGINEER
6355 N.W. 36 STREET, STE. 305
VIRGINIA GARDENS, FL 33166
PHONE(305) 871-1531 FAX (305) 871-1531
TEXAS LIC. # 90691
FIRM REGISTRATION # F-13790

2/1/16

P.E. SEAL/SIGNATURE/DATE

MAXIMUM DESIGN PRESSURE RATING SHEDULE FOR JAMBS FASTENED W/ 3/8"ø FASTENERS*

(C) SEE SHEET 9 FOR DEFINITION OF "b"

MAXIMUM MULLION SPAN "L" (Ft-in)	EFFECTIVE SPACING FOR JAMB MULLION "b"(Ft-in)	OPTION #1 : (2) FASTENERS CONNECTION								OPTION #2 : (3) FASTENERS CONNECTION							
		POURED CONCRETE			GROUT FILLED C. BLOCK			STEEL	WOOD	POURED CONCRETE			GROUT FILLED C. BLOCK			STEEL	WOOD
		J	K	L	M	N	O	P	Q	J	K	L	M	N	O	P	Q
6' - 2"	1' - 9"	90.0	90.0	85.3	83.4	90.0	85.3	90.0	59.9	90.0	90.0	90.0	90.0	90.0	90.0	90.0	89.9
	2' - 0"	90.0	90.0	74.6	73.0	90.0	74.6	90.0	52.4	90.0	90.0	90.0	90.0	90.0	90.0	90.0	78.6
	2' - 3"	82.3	90.0	66.3	64.9	82.3	66.3	90.0	46.6	90.0	90.0	90.0	90.0	90.0	90.0	90.0	69.9
	2' - 6"	74.1	83.9	59.7	58.4	74.1	59.7	83.9	41.9	90.0	90.0	89.6	87.6	90.0	89.6	90.0	62.9
6' - 6"	1' - 9"	90.0	90.0	80.9	79.1	90.0	80.9	90.0	56.6	90.0	90.0	90.0	90.0	90.0	90.0	90.0	85.3
	2' - 0"	87.9	90.0	70.8	69.2	87.9	70.8	90.0	49.7	90.0	90.0	90.0	90.0	90.0	90.0	90.0	74.6
	2' - 3"	78.1	88.4	62.9	61.5	78.1	62.9	88.4	44.2	90.0	90.0	90.0	90.0	90.0	90.0	90.0	66.3
	2' - 6"	70.3	79.6	56.6	55.4	70.3	56.6	79.6	39.8	90.0	90.0	85.0	83.1	90.0	85.0	90.0	59.7
7' - 0"	1' - 9"	90.0	90.0	75.1	73.5	90.0	75.1	90.0	52.8	90.0	90.0	90.0	90.0	90.0	90.0	90.0	79.2
	2' - 0"	81.6	90.0	65.7	64.3	81.6	65.7	90.0	46.2	90.0	90.0	90.0	90.0	90.0	90.0	90.0	69.3
	2' - 3"	72.5	82.1	58.4	57.1	72.5	58.4	82.1	41.1	90.0	90.0	87.7	85.7	90.0	87.7	90.0	61.6
	2' - 6"	65.3	73.9	52.6	51.4	65.3	52.6	73.9	36.9	90.0	90.0	78.9	77.1	90.0	78.9	90.0	55.4
7' - 6"	1' - 9"	87.0	90.0	70.1	68.6	87.0	70.1	90.0	49.3	90.0	90.0	90.0	90.0	90.0	90.0	90.0	73.9
	2' - 0"	76.2	86.2	61.4	60.0	76.2	61.4	86.2	43.1	90.0	90.0	90.0	90.0	90.0	90.0	90.0	64.7
	2' - 3"	67.7	76.6	54.5	53.3	67.7	54.5	76.6	38.3	90.0	90.0	81.8	80.0	90.0	81.8	90.0	57.5
	2' - 6"	60.9	69.0	49.1	48.0	60.9	49.1	69.0	34.5	90.0	90.0	73.6	72.0	90.0	73.6	90.0	51.7
8' - 0"	1' - 9"	81.6	90.0	65.7	64.3	81.6	65.7	90.0	46.2	90.0	90.0	90.0	90.0	90.0	90.0	90.0	69.3
	2' - 0"	71.4	80.8	57.5	56.3	71.4	57.5	80.8	40.4	90.0	90.0	86.3	84.4	90.0	86.3	90.0	60.6
	2' - 3"	63.5	71.8	51.1	50.0	63.5	51.1	71.8	35.9	90.0	90.0	76.7	75.0	90.0	76.7	90.0	53.9
	2' - 6"	57.1	64.7	46.0	45.0	57.1	46.0	64.7	32.3	85.7	90.0	69.0	67.5	85.7	69.0	90.0	48.5
8' - 6"	1' - 9"	76.8	86.9	61.9	60.5	76.8	61.9	86.9	43.5	90.0	90.0	90.0	90.0	90.0	90.0	90.0	65.2
	2' - 0"	67.2	76.1	54.1	52.9	67.2	54.1	76.1	38.0	90.0	90.0	81.2	79.4	90.0	81.2	90.0	57.1
	2' - 3"	59.7	67.6	48.1	47.1	59.7	48.1	67.6	33.8	89.6	90.0	72.2	70.6	89.6	72.2	90.0	50.7
	2' - 6"	53.8	60.9	43.3	42.4	53.8	43.3	60.9	30.4	80.6	90.0	65.0	63.5	80.6	65.0	90.0	45.6
9' - 0"	1' - 9"	72.5	82.1	58.4	57.1	72.5	58.4	82.1	41.1	90.0	90.0	87.7	85.7	90.0	87.7	90.0	61.6
	2' - 0"	63.5	71.8	51.1	50.0	63.5	51.1	71.8	35.9	90.0	90.0	76.6	75.0	90.0	76.6	90.0	53.9
	2' - 3"	56.4	63.9	45.5	44.4	56.4	45.5	63.9	31.9	84.6	90.0	68.2	66.7	84.6	68.2	90.0	47.9
	2' - 6"	50.8	57.5	40.9	40.0	50.8	40.9	57.5	28.7	76.2	86.2	61.4	60.0	76.2	61.4	86.2	43.1
9' - 6"	1' - 9"	68.7	77.8	55.4	54.1	68.7	55.4	77.8	38.9	90.0	90.0	83.0	81.2	90.0	83.0	90.0	58.3
	2' - 0"	60.1	68.1	48.4	47.4	60.1	48.4	68.1	34.0	90.0	90.0	72.7	71.1	90.0	72.7	90.0	51.0
	2' - 3"	53.4	60.5	43.1	42.1	53.4	43.1	60.5	30.2	80.2	90.0	64.6	63.2	80.2	64.6	90.0	45.4
	2' - 6"	48.1	54.4	38.8	37.9	48.1	38.8	54.4	27.2	72.1	81.7	58.1	56.8	72.1	58.1	81.7	40.8
10' - 0"	1' - 9"	65.3	73.9	52.6	51.4	65.3	52.6	73.9	36.9	90.0	90.0	78.9	77.1	90.0	78.9	90.0	55.4
	2' - 0"	57.1	64.7	46.0	45.0	57.1	46.0	64.7	32.3	85.7	90.0	69.0	67.5	85.7	69.0	90.0	48.5
	2' - 3"	50.8	57.5	40.9	40.0	50.8	40.9	57.5	28.7	76.2	86.2	61.4	60.0	76.2	61.4	86.2	43.1
	2' - 6"	45.7	51.7	36.8	36.0	45.7	36.8	51.7	25.9	68.5	77.6	55.2	54.0	68.5	55.2	77.6	38.8

MAXIMUM MULLION SPAN "L" (Ft-in)	EFFECTIVE SPACING FOR JAMB MULLION "b"(Ft-in)	OPTION #3 : (4) FASTENERS CONNECTION								OPTION #4 : (5) FASTENERS CONNECTION							
		POURED CONCRETE			GROUT FILLED C. BLOCK			STEEL	WOOD	POURED CONCRETE			GROUT FILLED C. BLOCK			STEEL	WOOD
		J	K	L	M	N	O	P	Q	J	K	L	M	N	O	P	Q
6' - 2"	1' - 9"	90.0	90.0	90.0	90.0	90.0	90.0	90.0	90.0	90.0	90.0	90.0	90.0	90.0	90.0	90.0	90.0
	2' - 0"	90.0	90.0	90.0	90.0	90.0	90.0	90.0	90.0	90.0	90.0	90.0	90.0	90.0	90.0	90.0	90.0
	2' - 3"	90.0	90.0	90.0	90.0	90.0	90.0	90.0	90.0	90.0	90.0	90.0	90.0	90.0	90.0	90.0	90.0
	2' - 6"	90.0	90.0	90.0	90.0	90.0	90.0	90.0	83.9	90.0	90.0	90.0	90.0	90.0	90.0	90.0	90.0
6' - 6"	1' - 9"	90.0	90.0	90.0	90.0	90.0	90.0	90.0	90.0	90.0	90.0	90.0	90.0	90.0	90.0	90.0	90.0
	2' - 0"	90.0	90.0	90.0	90.0	90.0	90.0	90.0	90.0	90.0	90.0	90.0	90.0	90.0	90.0	90.0	90.0
	2' - 3"	90.0	90.0	90.0	90.0	90.0	90.0	90.0	88.4	90.0	90.0	90.0	90.0	90.0	90.0	90.0	90.0
	2' - 6"	90.0	90.0	90.0	90.0	90.0	90.0	90.0	79.6	90.0	90.0	90.0	90.0	90.0	90.0	90.0	90.0
7' - 0"	1' - 9"	90.0	90.0	90.0	90.0	90.0	90.0	90.0	90.0	90.0	90.0	90.0	90.0	90.0	90.0	90.0	90.0
	2' - 0"	90.0	90.0	90.0	90.0	90.0	90.0	90.0	90.0	90.0	90.0	90.0	90.0	90.0	90.0	90.0	90.0
	2' - 3"	90.0	90.0	90.0	90.0	90.0	90.0	90.0	82.1	90.0	90.0	90.0	90.0	90.0	90.0	90.0	90.0
	2' - 6"	90.0	90.0	90.0	90.0	90.0	90.0	90.0	73.9	90.0	90.0	90.0	90.0	90.0	90.0	90.0	90.0
7' - 6"	1' - 9"	90.0	90.0	90.0	90.0	90.0	90.0	90.0	90.0	90.0	90.0	90.0	90.0	90.0	90.0	90.0	90.0
	2' - 0"	90.0	90.0	90.0	90.0	90.0	90.0	90.0	86.2	90.0	90.0	90.0	90.0	90.0	90.0	90.0	90.0
	2' - 3"	90.0	90.0	90.0	90.0	90.0	90.0	90.0	76.6	90.0	90.0	90.0	90.0	90.0	90.0	90.0	90.0
	2' - 6"	90.0	90.0	90.0	90.0	90.0	90.0	90.0	69.0	90.0	90.0	90.0	90.0	90.0	90.0	90.0	86.2
8' - 0"	1' - 9"	90.0	90.0	90.0	90.0	90.0	90.0	90.0	90.0	90.0	90.0	90.0	90.0	90.0	90.0	90.0	90.0
	2' - 0"	90.0	90.0	90.0	90.0	90.0	90.0	90.0	80.0	90.0	90.0	90.0	90.0	90.0	90.0	90.0	90.0
	2' - 3"	90.0	90.0	90.0	90.0	90.0	90.0	90.0	71.8	90.0	90.0	90.0	90.0	90.0	90.0	90.0	89.8
	2' - 6"	90.0	90.0	90.0	90.0	90.0	90.0	90.0	64.7	90.0	90.0	90.0	90.0	90.0	90.0	90.0	80.8
8' - 6"	1' - 9"	90.0	90.0	90.0	90.0	90.0	90.0	90.0	86.9	90.0	90.0	90.0	90.0	90.0	90.0	90.0	90.0
	2' - 0"	90.0	90.0	90.0	90.0	90.0	90.0	90.0	76.1	90.0	90.0	90.0	90.0	90.0	90.0	90.0	90.0
	2' - 3"	90.0	90.0	90.0	90.0	90.0	90.0	90.0	67.6	90.0	90.0	90.0	90.0	90.0	90.0	90.0	84.5
	2' - 6"	90.0	90.0	86.6	84.7	90.0	86.6	90.0	60.9	90.0	90.0	90.0	90.0	90.0	90.0	90.0	76.1
9' - 0"	1' - 9"	90.0	90.0	90.0	90.0	90.0	90.0	90.0	82.1	90.0	90.0	90.0	90.0	90.0	90.0	90.0	90.0
	2' - 0"	90.0	90.0	90.0	90.0	90.0	90.0	90.0	71.8	90.0	90.0	90.0	90.0	90.0	90.0	90.0	89.8
	2' - 3"	90.0	90.0	90.0	88.9	90.0	90.0	90.0	63.9	90.0	90.0	90.0	90.0	90.0	90.0	90.0	79.8
	2' - 6"	90.0	90.0	81.8	80.0	90.0	81.8	90.0	57.5	90.0	90.0	90.0	90.0	90.0	90.0	90.0	71.8
9' - 6"	1' - 9"	90.0	90.0	90.0	90.0	90.0	90.0	90.0	77.8	90.0	90.0	90.0	90.0	90.0	90.0	90.0	90.0
	2' - 0"	90.0	90.0	90.0	90.0	90.0	90.0	90.0	68.1	90.0	90.0	90.0	90.0	90.0	90.0	90.0	85.1
	2' - 3"	90.0	90.0	86.1	84.2	90.0	86.1	90.0	60.5	90.0	90.0	90.0	90.0	90.0	90.0	90.0	75.6
	2' - 6"	90.0	90.0	77.5	75.8	90.0	77.5	90.0	54.4	90.0	90.0	90.0	90.0	90.0	90.0	90.0	68.1
10' - 0"	1' - 9"	90.0	90.0	90.0	90.0	90.0	90.0	90.0	73.9	90.0	90.0	90.0	90.0	90.0	90.0	90.0	90.0
	2' - 0"	90.0	90.0	90.0	90.0	90.0	90.0	90.0	64.7	90.0	90.0	90.0	90.0	90.0	90.0	90.0	80.0
	2' - 3"	90.0	90.0	81.8	80.0	90.0	81.8	90.0	57.5	90.0	90.0	90.0	90.0	90.0	90.0	90.0	71.8
	2' - 6"	90.0	90.0	73.6	72.0	90.0	73.6	90.0	51.7	90.0	90.0	90.0	90.0	90.0	90.0	90.0	64.7

* SEE SHEETS 13 & 14 FOR SPECS FOR JAMBS ATTACHED TO EXISTING WALL W/WET OR DRY GLAZED WITH LAMINATED OR INSULATED GLASS.
JAMBS ATTACHED TO EXISTING WALL HOLDING INSULATED GLASS MAY BE WET OR DRY GLAZED.
JAMBS ATTACHED TO EXISTING WALL HOLDING LAMINATED GLASS MUST ALWAYS BE WET GLAZED.

(C) FASTENERS TYPES AND SUBSTRATES REQUIREMENTS W/ 2 3/4" MIN. E.D., BEYOND ANY FINISH MATERIAL

J - 3/8"Ø HILTI KWIK BOLT 3 ANCHOR W/ 2" Min. EMBEDMENT INTO 6" Min. THICK POURED CONCRETE (Min. f'c = 3 ksi).

K - 3/8"Ø POWER FASTENERS TAPPER ANCHOR W/ 1 3/4" Min. EMBEDMENT INTO POURED CONCRETE (Min. f'c = 3 ksi).

L - 3/8"Ø HILTI HUS-H SCREW ANCHOR W/ 2" Min. EMBEDMENT INTO POURED CONCRETE (Min. f'c = 3 ksi).

M - 3/8"Ø POWER FASTENERS TAPPER ANCHOR W/ 1 3/4" Min. EMBEDMENT INTO GROUT FILLED CONCRETE BLOCK.

N - 3/8"Ø HILTI KWIK BOLT 3 ANCHOR W/ 2 1/2" Min. EMBEDMENT INTO GROUT FILLED CONCRETE BLOCK.

O - 3/8"Ø HILTI HUS-H SCREW ANCHOR W/ 2 3/4" Min. EMBEDMENT INTO GROUT FILLED CONCRETE BLOCK.

P - 3/8"Ø TYPE "F" BOLT OR 3/8"Ø -16 ELCO CONSTRUCTION PRODUCTS DRILL FLEX SCREW & 1 3/4" MIN. EDGE DISTANCE TO 1/4" Min. THK. ASTM A-36 OR 12 GAGE (0.108" MIN. THK.) Fy=33 ksi STEEL.

Q - 3/8"Ø LAG SCREWS TO DOUBLE 2 x WOOD BUCK (G=0.55) W/ 3" Min. PENETRATION INTO WOOD & 2" MIN. EDGE DISTANCE, BEYOND ANY FINISH MATERIAL.

■ MIN. SPACING (spcg.) REQUIRED FOR DIFFERENT SUBSTRATES

-POURED CONCRETE:	4 1/2" MIN. O.C.
-GROUT FILLED C.B.:	8" MIN. O.C.
-STEEL:	4 1/2" MIN. O.C.
-WOOD:	2" MIN. O.C.

OPTION # 1 (ELEVATION)
(2) FASTENERS CONNECTION

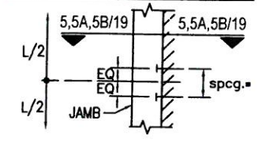

OPTION # 2 (ELEVATION)
(3) FASTENERS CONNECTION

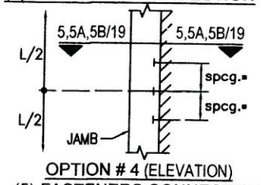

OPTION # 3 (ELEVATION)
(4) FASTENERS CONNECTION

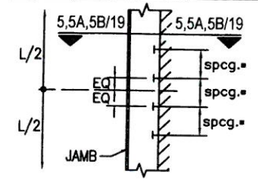

OPTION # 4 (ELEVATION)
(5) FASTENERS CONNECTION

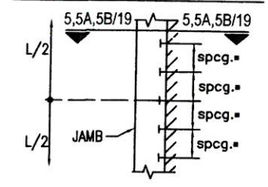

TEXAS DEPARTMENT OF INSURANCE - 2006

SERIES FG-5100 FLUSH GLAZED ALUMINUM WINDOW WALL SYSTEM
LARGE & SMALL MISSILE IMPACT LAMINATED OR INSULATED WET & INSULATED DRY GLAZED

Oldcastle BuildingEnvelope™
803 AIRPORT RD. TERRELL TX 75160
www.OldcastleBE.com-Phone 800-869-4567

REV. No.	DATE	DESCRIPTION	REV. No.	DATE	DESCRIPTION

DRAWN BY: F.R.L
DATE 12/4/14
DRAWING No 14-086
SHEET 13 OF 20

WALTER A. TILLIT Jr P.E.
PROFESSIONAL ENGINEER
6355 N.W 36 STREET, STE. 305
VIRGINIA GARDENS, FL 33166
PHONE(305) 871-1530 FAX (305) 871-1531
TEXAS LIC. # 90691
FIRM REGISTRATION # F-13790

P.E. SEAL/SIGNATURE/DATE

MAXIMUM DESIGN PRESSURE RATING SHEDULE FOR JAMBS FASTENED W/ 1/2"ø FASTENERS*

(C) SEE SHEET 9 FOR DEFINITION OF "b"

MAXIMUM MULLION SPAN	EFFECTIVE SPACING FOR JAMB MULLION	OPTION #1 : (2) FASTENERS CONNECTION						OPTION #2 : (3) FASTENERS CONNECTION						OPTION #3 : (4) FASTENERS CONNECTION						OPTION #4 : (5) FASTENERS CONNECTION					
		POURED CONCRETE		GROUT FILLED C. BLOCK		STEEL	WOOD	POURED CONCRETE		GROUT FILLED C. BLOCK		STEEL	WOOD	POURED CONCRETE		GROUT FILLED C. BLOCK		STEEL	WOOD	POURED CONCRETE		GROUT FILLED C. BLOCK		STEEL	WOOD
"L" (Ft-in)	"b"(Ft-in)	R	S	T	U	V	W	R	S	T	U	V	W	R	S	T	U	V	W	R	S	T	U	V	W
6' - 2"	1' - 9"	90.0	90.0	57.5	88.0	90.0	54.0	90.0	90.0	90.0	90.0	90.0	90.0	90.0	90.0	90.0	90.0	90.0	90.0	90.0	90.0	90.0	90.0	90.0	90.0
	2' - 0"	90.0	90.0	50.3	77.0	90.0	47.3	90.0	90.0	90.0	90.0	90.0	90.0	90.0	90.0	90.0	90.0	90.0	90.0	90.0	90.0	90.0	90.0	90.0	90.0
	2' - 3"	90.0	87.9	44.7	68.5	90.0	42.0	90.0	90.0	89.4	90.0	90.0	84.0	90.0	90.0	90.0	90.0	90.0	90.0	90.0	90.0	90.0	90.0	90.0	90.0
	2' - 6"	84.4	79.1	40.2	61.6	90.0	37.8	90.0	90.0	80.4	90.0	90.0	75.6	90.0	90.0	90.0	90.0	90.0	90.0	90.0	90.0	90.0	90.0	90.0	90.0
6' - 6"	1' - 9"	90.0	90.0	54.5	83.5	90.0	51.3	90.0	90.0	90.0	90.0	90.0	90.0	90.0	90.0	90.0	90.0	90.0	90.0	90.0	90.0	90.0	90.0	90.0	90.0
	2' - 0"	90.0	90.0	47.7	73.1	90.0	44.9	90.0	90.0	90.0	90.0	90.0	89.7	90.0	90.0	90.0	90.0	90.0	90.0	90.0	90.0	90.0	90.0	90.0	90.0
	2' - 3"	89.4	83.4	42.4	65.0	90.0	39.9	90.0	90.0	84.8	90.0	90.0	79.7	90.0	90.0	90.0	90.0	90.0	90.0	90.0	90.0	90.0	90.0	90.0	90.0
	2' - 6"	80.5	75.0	38.2	58.5	90.0	35.9	90.0	90.0	76.3	90.0	90.0	71.8	90.0	90.0	90.0	90.0	90.0	90.0	90.0	90.0	90.0	90.0	90.0	90.0
7' - 0"	1' - 9"	90.0	90.0	50.6	77.6	90.0	47.6	90.0	90.0	90.0	90.0	90.0	90.0	90.0	90.0	90.0	90.0	90.0	90.0	90.0	90.0	90.0	90.0	90.0	90.0
	2' - 0"	90.0	87.1	44.3	67.9	90.0	41.6	90.0	90.0	88.6	90.0	90.0	83.3	90.0	90.0	90.0	90.0	90.0	90.0	90.0	90.0	90.0	90.0	90.0	90.0
	2' - 3"	83.0	77.4	39.4	60.3	90.0	37.0	90.0	90.0	78.7	90.0	90.0	74.0	90.0	90.0	90.0	90.0	90.0	90.0	90.0	90.0	90.0	90.0	90.0	90.0
	2' - 6"	74.7	69.7	35.4	54.3	84.6	33.3	90.0	90.0	70.9	90.0	90.0	66.6	90.0	90.0	90.0	90.0	90.0	90.0	90.0	90.0	90.0	90.0	90.0	90.0
7' - 6"	1' - 9"	90.0	90.0	47.2	72.4	90.0	44.4	90.0	90.0	90.0	90.0	90.0	88.9	90.0	90.0	90.0	90.0	90.0	90.0	90.0	90.0	90.0	90.0	90.0	90.0
	2' - 0"	87.2	81.3	41.3	63.3	90.0	38.9	90.0	90.0	82.7	90.0	90.0	77.7	90.0	90.0	90.0	90.0	90.0	90.0	90.0	90.0	90.0	90.0	90.0	90.0
	2' - 3"	77.5	72.2	36.7	56.3	87.7	34.6	90.0	90.0	73.5	90.0	90.0	69.1	90.0	90.0	90.0	90.0	90.0	90.0	90.0	90.0	90.0	90.0	90.0	90.0
	2' - 6"	69.7	65.0	33.1	50.7	79.0	31.1	90.0	90.0	66.1	90.0	90.0	62.2	90.0	90.0	90.0	90.0	90.0	90.0	90.0	90.0	90.0	90.0	90.0	90.0
8' - 0"	1' - 9"	90.0	87.1	44.3	67.9	90.0	41.6	90.0	90.0	88.6	90.0	90.0	83.3	90.0	90.0	90.0	90.0	90.0	90.0	90.0	90.0	90.0	90.0	90.0	90.0
	2' - 0"	81.7	76.2	38.8	59.4	90.0	36.4	90.0	90.0	77.5	90.0	90.0	72.9	90.0	90.0	90.0	90.0	90.0	90.0	90.0	90.0	90.0	90.0	90.0	90.0
	2' - 3"	72.7	67.7	34.4	52.8	82.2	32.4	90.0	90.0	68.9	90.0	90.0	64.8	90.0	90.0	90.0	90.0	90.0	90.0	90.0	90.0	90.0	90.0	90.0	90.0
	2' - 6"	65.4	61.0	31.0	47.5	74.0	29.2	90.0	90.0	62.0	90.0	90.0	58.3	90.0	90.0	90.0	90.0	90.0	87.5	90.0	90.0	90.0	90.0	90.0	90.0
8' - 6"	1' - 9"	87.9	82.0	41.7	63.9	90.0	39.2	90.0	90.0	83.4	90.0	90.0	78.4	90.0	90.0	90.0	90.0	90.0	90.0	90.0	90.0	90.0	90.0	90.0	90.0
	2' - 0"	76.9	71.7	36.5	55.9	87.1	34.3	90.0	90.0	72.9	90.0	90.0	68.6	90.0	90.0	90.0	90.0	90.0	90.0	90.0	90.0	90.0	90.0	90.0	90.0
	2' - 3"	68.4	63.7	32.4	49.7	77.4	30.5	90.0	90.0	64.8	90.0	90.0	61.0	90.0	90.0	90.0	90.0	90.0	90.0	90.0	90.0	90.0	90.0	90.0	90.0
	2' - 6"	61.5	57.4	29.2	44.7	69.7	27.4	90.0	90.0	58.4	89.4	90.0	54.9	90.0	90.0	87.5	90.0	90.0	82.3	90.0	90.0	90.0	90.0	90.0	90.0
9' - 0"	1' - 9"	83.0	77.4	39.4	60.3	90.0	37.0	90.0	90.0	78.7	90.0	90.0	74.0	90.0	90.0	90.0	90.0	90.0	90.0	90.0	90.0	90.0	90.0	90.0	90.0
	2' - 0"	72.7	67.7	34.4	52.8	82.2	32.4	90.0	90.0	68.9	90.0	90.0	64.8	90.0	90.0	90.0	90.0	90.0	90.0	90.0	90.0	90.0	90.0	90.0	90.0
	2' - 3"	64.6	60.2	30.6	46.9	73.1	28.8	90.0	90.0	61.2	90.0	90.0	57.0	90.0	90.0	90.0	90.0	90.0	86.4	90.0	90.0	90.0	90.0	90.0	90.0
	2' - 6"	58.1	54.2	27.6	42.2	65.8	25.9	90.0	90.0	55.1	84.4	90.0	51.8	90.0	90.0	82.7	90.0	90.0	77.7	90.0	90.0	90.0	90.0	90.0	90.0
9' - 6"	1' - 9"	78.7	73.3	37.3	57.1	89.1	35.1	90.0	90.0	74.6	90.0	90.0	70.1	90.0	90.0	90.0	90.0	90.0	90.0	90.0	90.0	90.0	90.0	90.0	90.0
	2' - 0"	68.8	64.2	32.6	50.0	77.9	30.7	90.0	90.0	65.3	90.0	90.0	61.4	90.0	90.0	90.0	90.0	90.0	90.0	90.0	90.0	90.0	90.0	90.0	90.0
	2' - 3"	61.2	57.0	29.0	44.4	69.3	27.3	90.0	90.0	58.0	88.9	90.0	54.6	90.0	90.0	87.0	90.0	90.0	81.8	90.0	90.0	90.0	90.0	90.0	90.0
	2' - 6"	55.1	51.3	26.1	40.0	62.3	24.6	90.0	90.0	52.2	80.0	90.0	49.1	90.0	90.0	78.3	90.0	90.0	73.7	90.0	90.0	90.0	90.0	90.0	90.0
10' - 0"	1' - 9"	74.2	69.7	35.4	54.3	84.6	33.3	90.0	90.0	70.9	90.0	90.0	66.6	90.0	90.0	90.0	90.0	90.0	90.0	90.0	90.0	90.0	90.0	90.0	90.0
	2' - 0"	65.4	61.0	31.0	47.5	74.0	29.2	90.0	90.0	62.0	90.0	90.0	58.3	90.0	90.0	90.0	90.0	90.0	87.5	90.0	90.0	90.0	90.0	90.0	90.0
	2' - 3"	58.1	54.2	27.6	42.2	65.8	25.9	90.0	90.0	55.1	84.4	90.0	51.8	90.0	90.0	82.7	90.0	90.0	77.7	90.0	90.0	90.0	90.0	90.0	90.0
	2' - 6"	52.3	48.8	24.8	38.0	59.2	23.3	90.0	90.0	49.6	76.0	90.0	46.6	90.0	90.0	74.4	90.0	90.0	70.0	90.0	90.0	90.0	90.0	90.0	90.0

* SEE SHEETS 13 & 14 FOR SPECS FOR JAMBS ATTACHED TO EXISTING WALL W/WET OR DRY GLAZED WITH LAMINATED OR INSULATED GLASS.
JAMBS ATTACHED TO EXISTING WALL HOLDING INSULATED GLASS MAY BE WET OR DRY GLAZED.
JAMBS ATTACHED TO EXISTING WALL HOLDING LAMINATED GLASS MUST ALWAYS BE WET GLAZED.

(C) FASTENERS TYPES AND SUBSTRATES REQUIREMENTS W/ 2 3/4" MIN. E.D., BEYOND ANY FINISH MATERIAL

R - 1/2"Ø HILTI KWIK BOLT 3 ANCHOR W/ 2" Min. EMBEDMENT INTO 6" Min. THICK POURED CONCRETE (Min. f'c = 3 ksi) .

S - 1/2"Ø HILTI HUS-H SCREW ANCHOR W/ 3" Min. EMBEDMENT INTO POURED CONCRETE (Min. f'c = 3 ksi).

T - 1/2"Ø HILTI KWIK BOLT 3 ANCHOR W/ 2 1/2" Min. EMBEDMENT INTO GROUT FILLED CONCRETE BLOCK.

U - 1/2"Ø HILTI HUS-H SCREW ANCHOR W/ 3" Min. EMBEDMENT INTO GROUT FILLED CONCRETE BLOCK.

V - 1/2"Ø TYPE "F" BOLT & 2" MIN. EDGE DISTANCE TO 1/4" Min. THK. ASTM A-36 OR 12 GAGE (0.108" MIN. THK.) Fy=33 ksi STEEL.

W - 1/2"Ø LAG SCREWS TO DOUBLE 2 x WOOD BUCK (G=0.55) W/ 3" Min. PENETRATION INTO WOOD & 2" MIN. EDGE DISTANCE, BEYOND ANY FINISH MATERIAL.

■ MIN. SPACING (spcg.) REQUIRED FOR DIFFERENT SUBSTRATES

-POURED CONCRETE:	4 1/2" MIN. O.C.
-GROUT FILLED C.B.:	8" MIN. O.C.
-STEEL:	4 1/2" MIN. O.C.
-WOOD:	2" MIN. O.C.

OPTION # 1 (ELEVATION)
(1) FASTENER CONNECTION

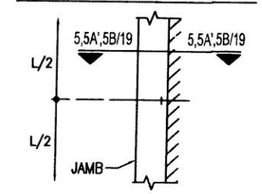

OPTION # 2 (ELEVATION)
(2) FASTENERS CONNECTION

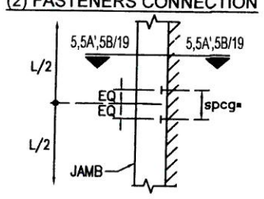

OPTION # 3 (ELEVATION)
(3) FASTENERS CONNECTION

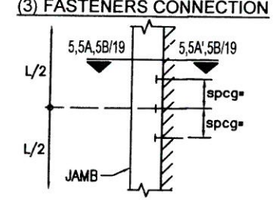

OPTION # 4 (ELEVATION)
(4) FASTENERS CONNECTION

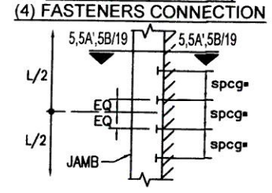

TEXAS DEPARTMENT OF INSURANCE - 2006

SERIES FG-5100 FLUSH GLAZED ALUMINUM WINDOW WALL SYSTEM
LARGE & SMALL MISSILE IMPACT LAMINATED OR INSULATED WET & INSULATED DRY GLAZED

Oldcastle BuildingEnvelope™
803 AIRPORT RD. TERRELL TX 75160
www.OldcastleBE.com-Phone 800-869-4567

REV. No	DATE	DESCRIPTION	REV. No	DATE	DESCRIPTION

DRAWN BY: F.R.L
DATE: 12/4/14
DRAWING No: 14-086
SHEET 14 of 20

WALTER A. TILLIT Jr P.E.
PROFESSIONAL ENGINEER
6355 N.W 36 STREET, STE. 305
VIRGINIA GARDENS, FL 33166
PHONE(305) 871-1530 FAX (305) 871-1531
TEXAS LIC. # 90691
FIRM REGISTRATION # F-13790

P.E. SEAL/SIGNATURE/DATE

2/1/16

HEAD CONNECTIONS DETAILS LAMINATED & INSULATED GLASS

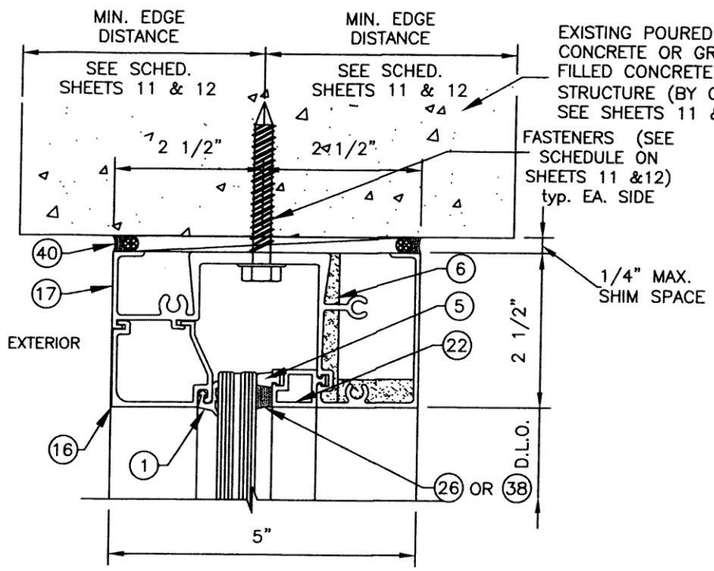

1
HEAD

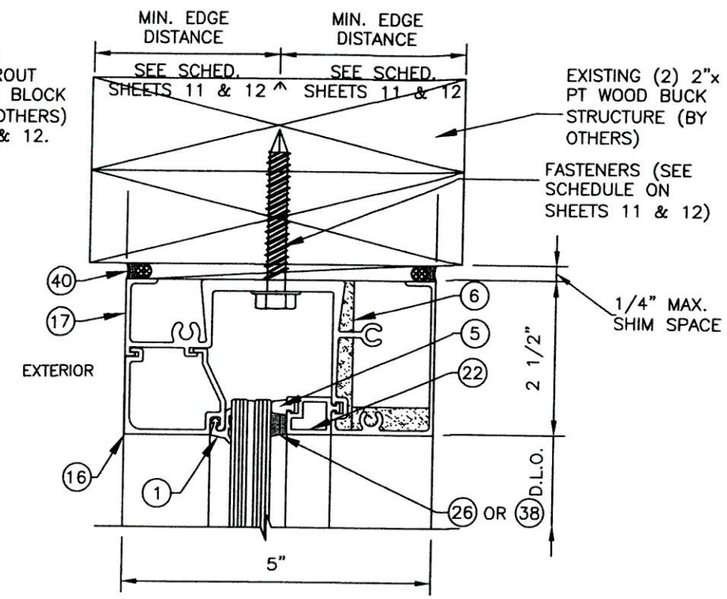

1A
HEAD

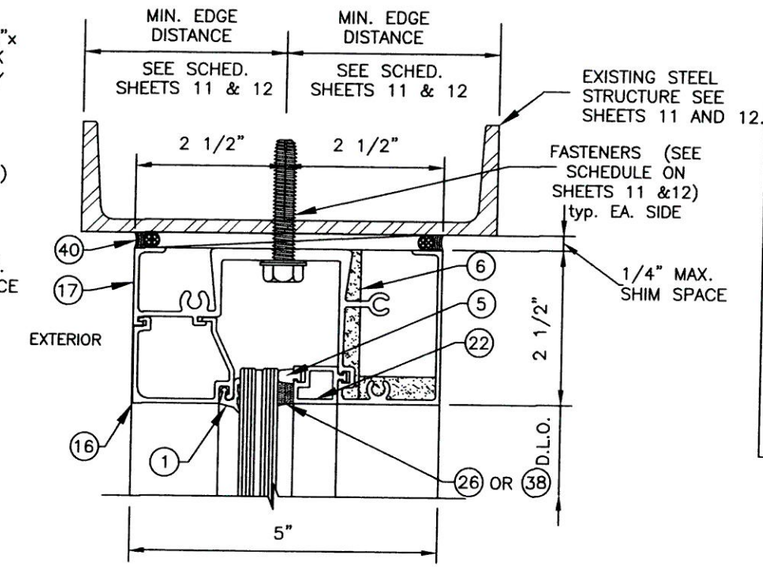

1B
HEAD

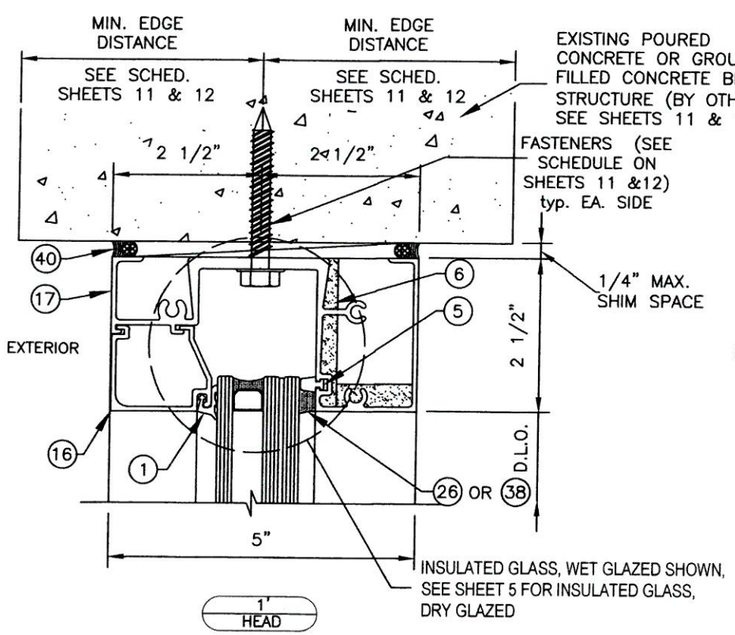

1'
HEAD

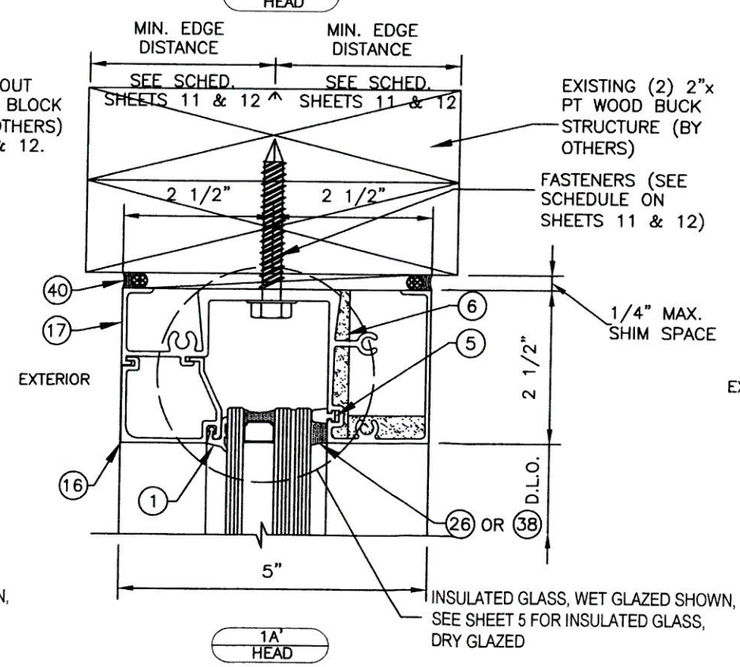

1A'
HEAD

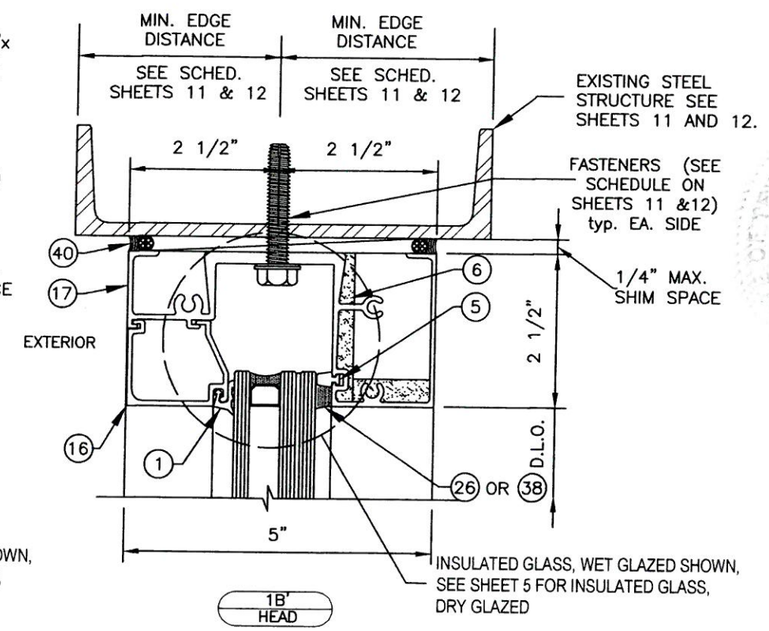

1B'
HEAD

TEXAS DEPARTMENT OF INSURANCE - 2006

SERIES FG-5100 FLUSH GLAZED ALUMINUM WINDOW WALL SYSTEM
LARGE & SMALL MISSILE IMPACT LAMINATED OR INSULATED WET & INSULATED DRY GLAZED

DRAWN BY: F.R.L
DATE: 12/4/14
DRAWING No: 14-086
SHEET 15 OF 20

Oldcastle BuildingEnvelope™
803 AIRPORT RD. TERRELL TX 75160
www.OldcastleBE.com-Phone 800-869-4567

REV. No.	DATE	DESCRIPTION	REV. No.	DATE	DESCRIPTION

WALTER A. TILLIT Jr P.E.
PROFESSIONAL ENGINEER
6355 N.W 36 STREET, STE. 305
VIRGINIA GARDENS, FL 33166
PHONE(305) 871-1530 FAX (305) 871-1531
TEXAS LIC. # 90691
FIRM REGISTRATION # F-13790

P.E. SEAL/SIGNATURE/DATE

7/11/16

SILL CONNECTION DETAILS LAMINATED & INSULATED GLASS

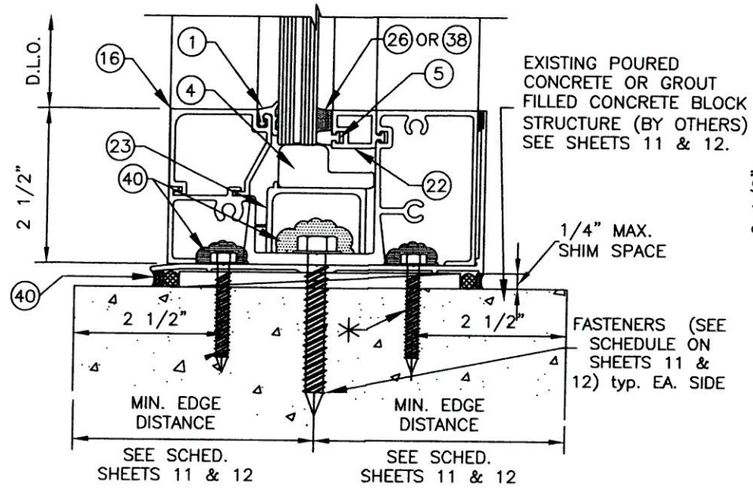

2
SILL

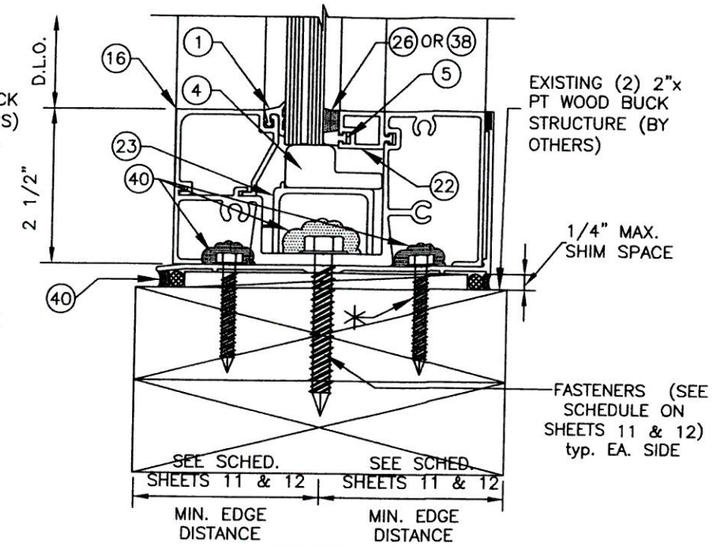

2A
SILL

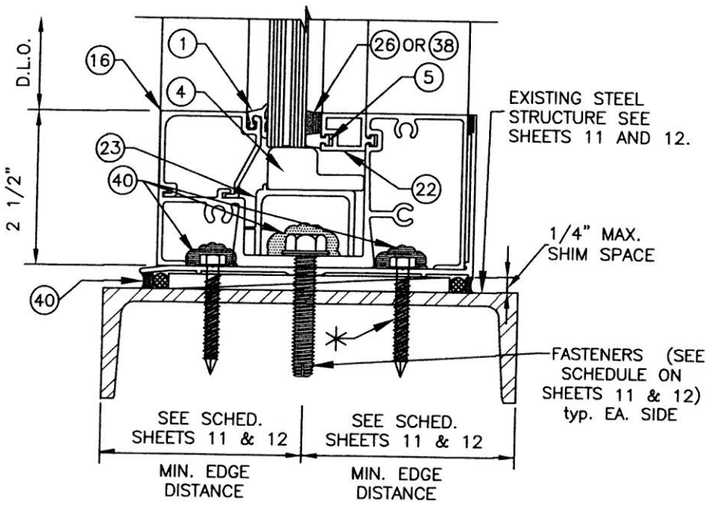

2B
SILL

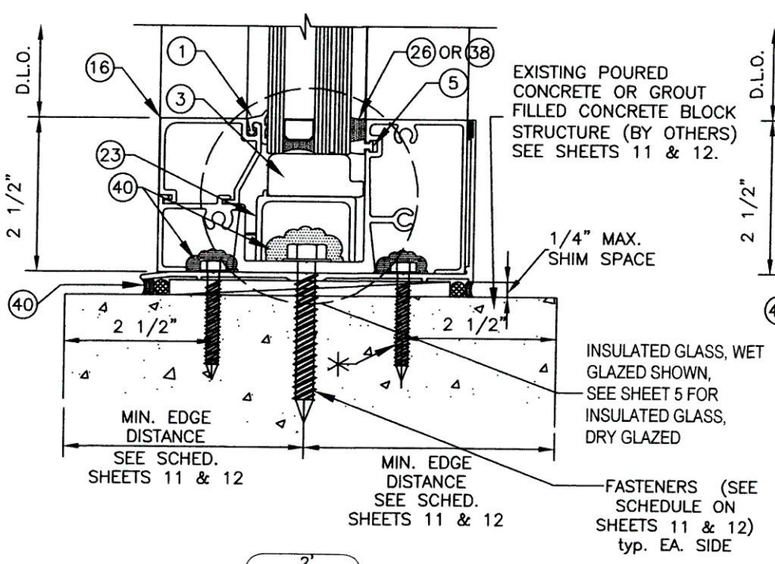

2'
SILL

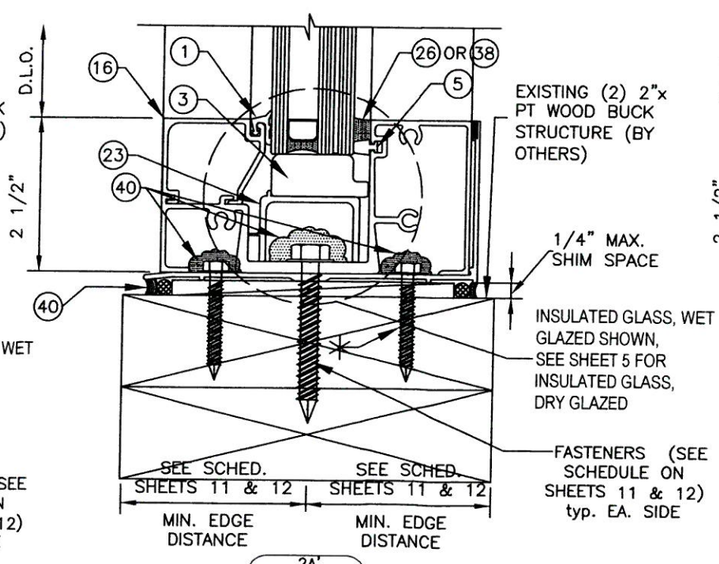

2A'
SILL

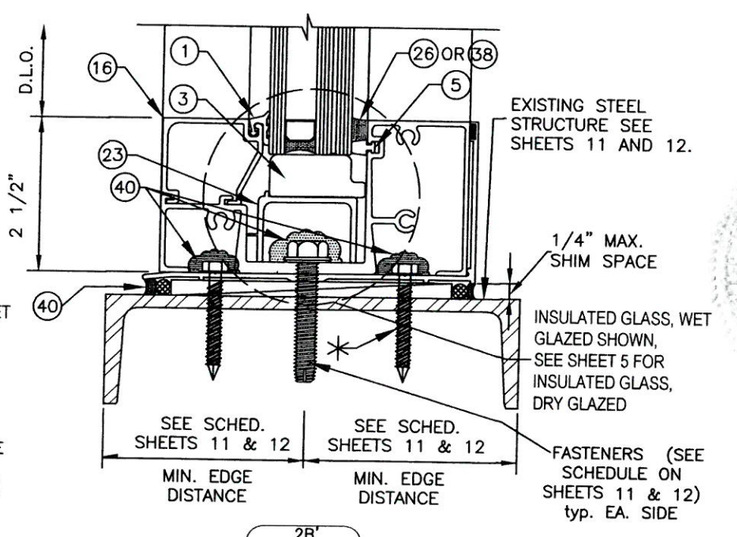

2B'
SILL

* 3/16"ø X 2" TAPCONS (FOR CONCRETE), 3/16"ø X 2" LAG SCREW (FOR WOOD) OR 3/16"ø X 1" S.S. SCREWS NON STRUCTURAL FASTENERS, LOCATE (1) AT EACH END AND (1) AT MID LENGTH TO SECURE FLASHING UNTIL FASTENERS ARE INSTALLED.

TEXAS DEPARTMENT OF INSURANCE - 2006

SERIES FG-5100 FLUSH GLAZED ALUMINUM WINDOW WALL SYSTEM
LARGE & SMALL MISSILE IMPACT LAMINATED OR INSULATED WET & INSULATED DRY GLAZED

DRAWN BY: F.R.L
DATE: 12/4/14
DRAWING No: 14-086
SHEET 16 OF 20

Oldcastle BuildingEnvelope™
803 AIRPORT RD. TERRELL, TX 75160
www.OldcastleBE.com-Phone 800-869-6567

REV. No.	DESCRIPTION	DATE	REV. No.	DESCRIPTION	DATE

WALTER A. TILLIT Jr P.E.
PROFESSIONAL ENGINEER
6355 N.W 36 STREET, STE. 305
VIRGINIA GARDENS, FL 33166
PHONE(305) 871-1530 FAX (305) 871-1531
TEXAS LIC. # 90691
FIRM REGISTRATION # F-13790

P.E. SEAL/SIGNATURE/DATE

SECTIONS AT STANDARD, HEAVY & CORNER MULLION W/ LAMINATED GLASS (WET GLAZED)

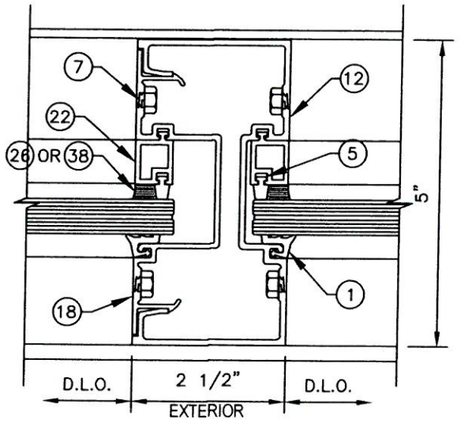

3
MULLION PLAN

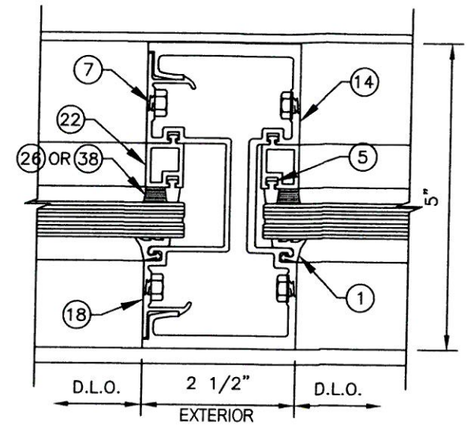

4
MULLION PLAN

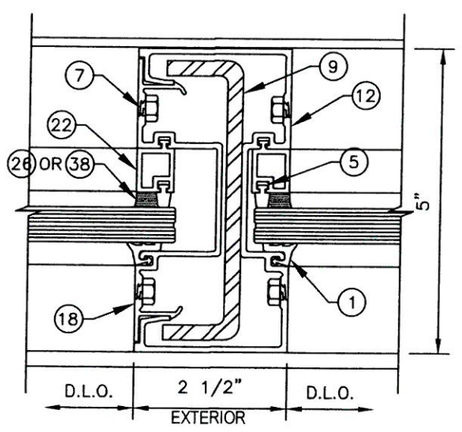

3A
MULLION PLAN

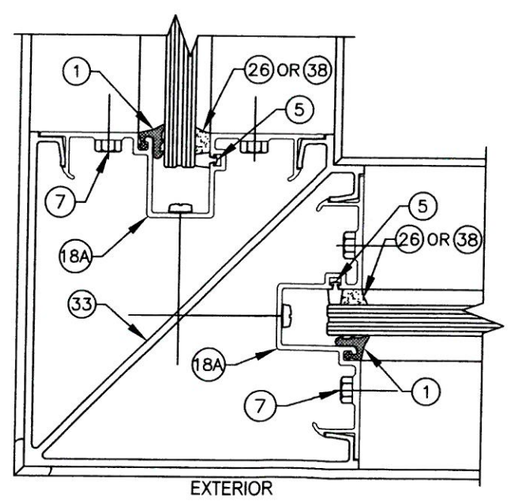

5
90 DEGREE OUTSIDE
CORNER MULLION

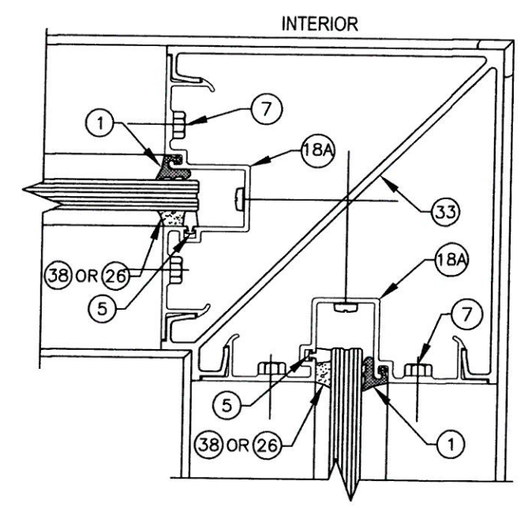

5A
90 DEGREE INSIDE
CORNER MULLION

TEXAS DEPARTMENT OF INSURANCE - 2006

SERIES FG-5100 FLUSH GLAZED
ALUMINUM WINDOW WALL SYSTEM
LARGE & SMALL MISSILE IMPACT LAMINATED OR INSULATED WET
& INSULATED DRY GLAZED

DRAWN BY: F.R.L
DATE: 12/4/14

14-086
DRAWING No

SHEET 17 OF 20

Oldcastle BuildingEnvelope
803 AIRPORT RD. TERRELL, TX 75160
www.OldcastleBE.com-Phone 800-869-4567

REV. No	DESCRIPTION	DATE	REV. No	DESCRIPTION	DATE

WALTER A. TILLIT Jr P.E.
PROFESSIONAL ENGINEER
6355 N.W 36 STREET, STE. 305
VIRGINIA GARDENS, FL 33166
PHONE(305) 871-1530 FAX (305) 871-1531
TEXAS LIC. # 90691
FIRM REGISTRATION # F-13790

P.E. SEAL/SIGNATURE/DATE

SECTIONS AT STANDARD, HEAVY & CORNER MULLION W/ INSULATED GLASS (WET & DRY GLAZED)

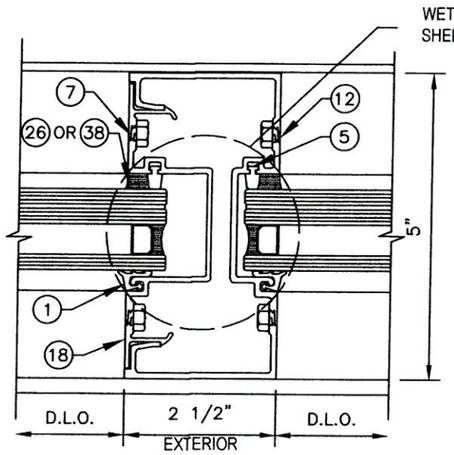

3'
MULLION PLAN

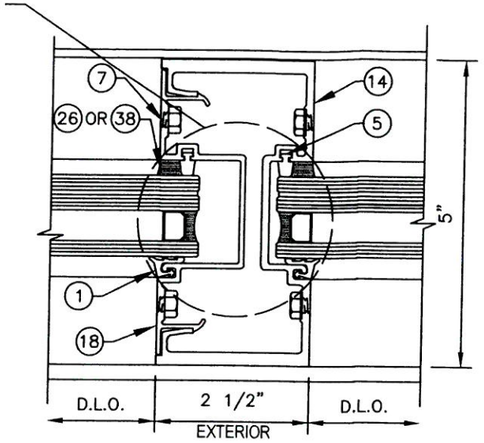

4'
MULLION PLAN

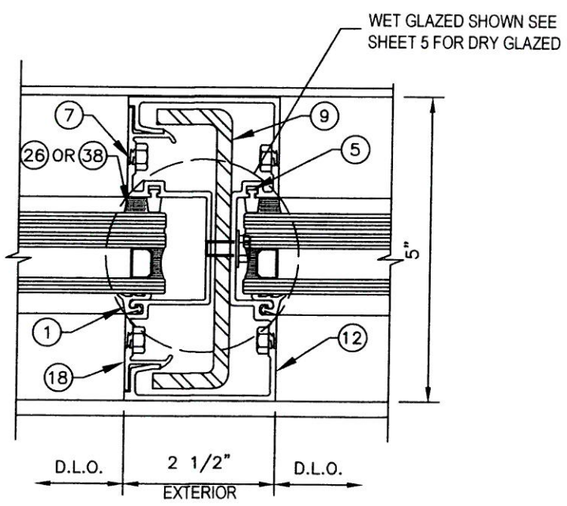

3A'
MULLION PLAN

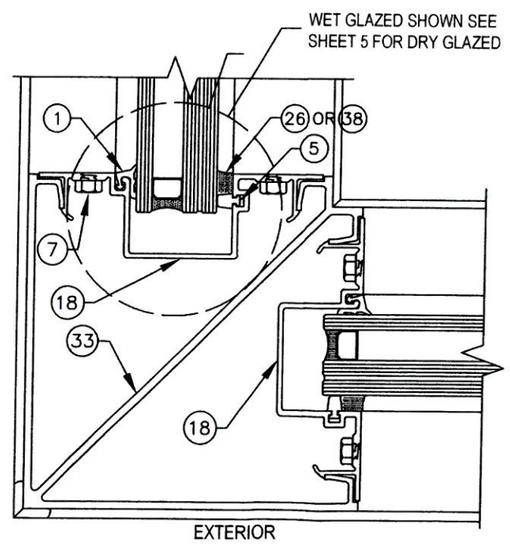

5'
90 DEGREE OUTSIDE
CORNER MULLION

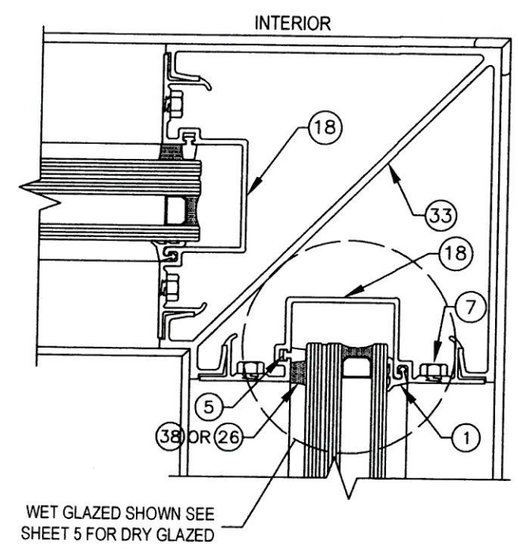

5A'
90 DEGREE INSIDE
CORNER MULLION

TEXAS DEPARTMENT OF INSURANCE - 2006

SERIES FG-5100 FLUSH GLAZED
ALUMINUM WINDOW WALL SYSTEM
LARGE & SMALL MISSILE IMPACT LAMINATED OR INSULATED WET
& INSULATED DRY GLAZED

Oldcastle BuildingEnvelope™
803 AIRPORT RD. TERRELL TX 75160
www.OldcastleBE.com-Phone 800-469-4567

DRAWN BY: F.R.J.
DATE 12/4/14
DRAWING No. 14-086
SHEET 18 OF 20

REV. No.	DATE	DESCRIPTION	REV. No.	DATE	DESCRIPTION

WALTER A. TILLIT Jr P.E.
PROFESSIONAL ENGINEER
6355 N.W 36 STREET, STE. 305
VIRGINIA GARDENS, FL 33166
PHONE(305) 871-1530 FAX (305) 871-1531
TEXAS LIC. # 90691
FIRM REGISTRATION # F-13790

7/1/16

P.E. SEAL/SIGNATURE/DATE

HORIZONTAL CONNECTIONS DETAILS AT JAMB

TO POURED CONCRETE OR GROUT FILLED CONCRETE BLOCK STRUCTURE

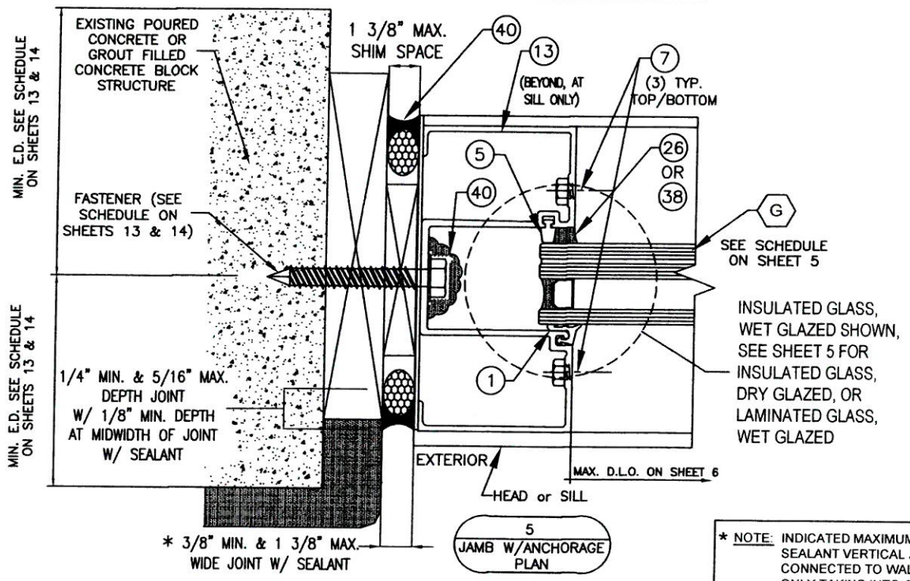

5
JAMB W/ANCHORAGE PLAN

TO STEEL STRUCTURE

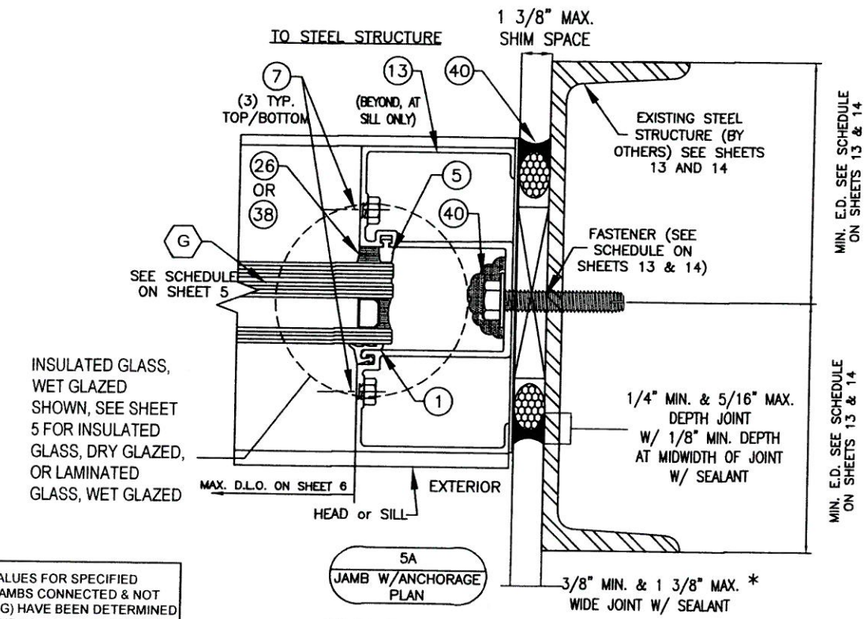

5A
JAMB W/ANCHORAGE PLAN

* NOTE: INDICATED MAXIMUM AND MINIMUM VALUES FOR SPECIFIED SEALANT VERTICAL JOINT WIDTH AT JAMBS CONNECTED & NOT CONNECTED TO WALL (FREE STANDING) HAVE BEEN DETERMINED ONLY TAKING INTO CONSIDERATION THE ACTUAL MOVEMENT OF GLASS WALL AT JAMBS DUE TO THERMAL, WIND AND ITS OWN CONSTRUCTION TOLERANCE, AND NOT PERFORMANCE FACTORS FROM THE SURROUNDING STRUCTURE.

TO WOOD STRUCTURE

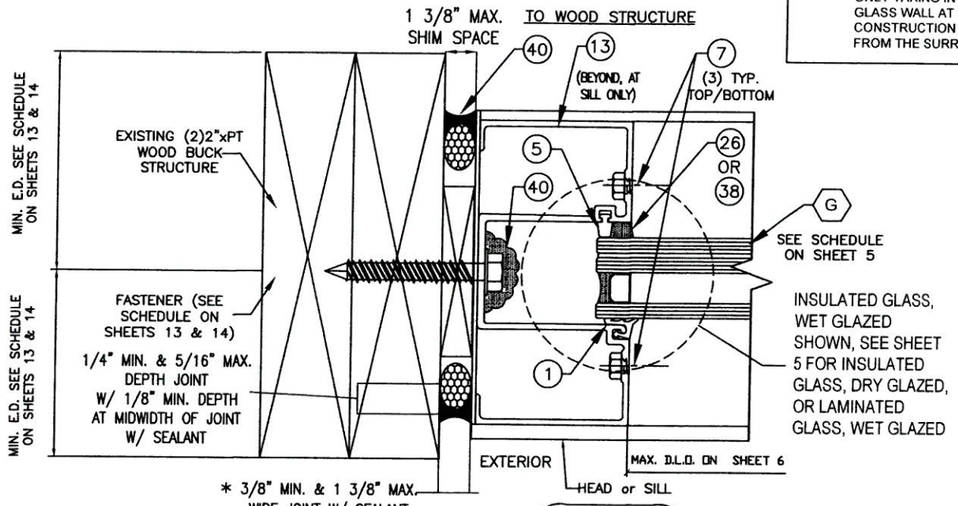

5B
JAMB W/ANCHORAGE PLAN

TO EXISTING STRUCTURE

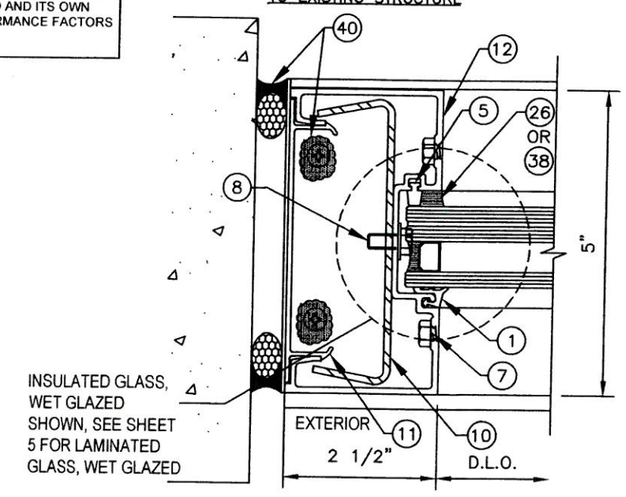

6
JAMB MULLION W/ NO ANCHORADE PLAN

TEXAS DEPARTMENT OF INSURANCE - 2006

SERIES FG-5100 FLUSH GLAZED ALUMINUM WINDOW WALL SYSTEM
LARGE & SMALL MISSILE IMPACT LAMINATED OR INSULATED WET & INSULATED DRY GLAZED

DRAWN BY: F.R.L
DATE: 12/4/14
DRAWING No: 14-086
SHEET 19 of 20

Oldcastle BuildingEnvelope
803 AIRPORT RD. TERRELL, TX 75160
www.OldcastleBE.com • Phone: 800-869-4567

REV. No	DATE	DESCRIPTION

REV. No	DATE	DESCRIPTION

WALTER A. TILLIT Jr P.E.
PROFESSIONAL ENGINEER
6355 N.W 36 STREET, STE. 305
VIRGINIA GARDENS, FL 33166
PHONE(305) 871-1530 FAX (305) 871-1531
TEXAS LIC. # 90691
FIRM REGISTRATION # F-13790

2/11/16

P.E. SEAL/SIGNATURE/DATE

CORNER DETAIL AT JAMB

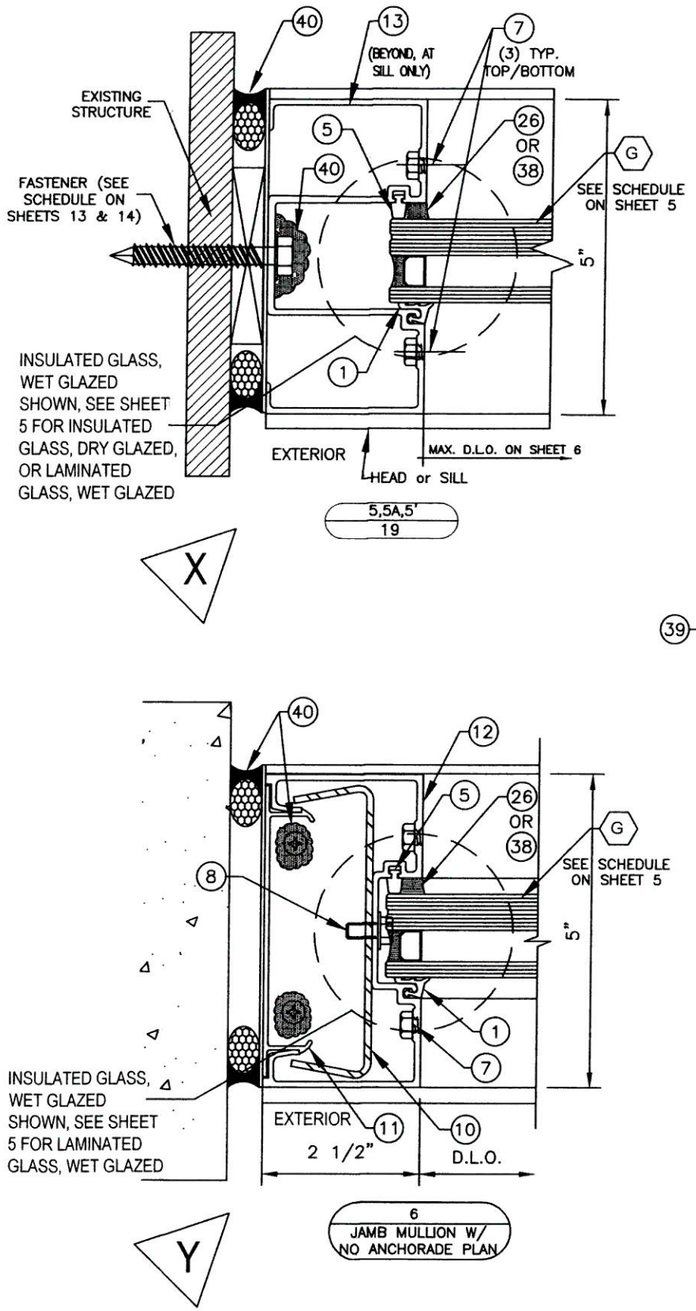

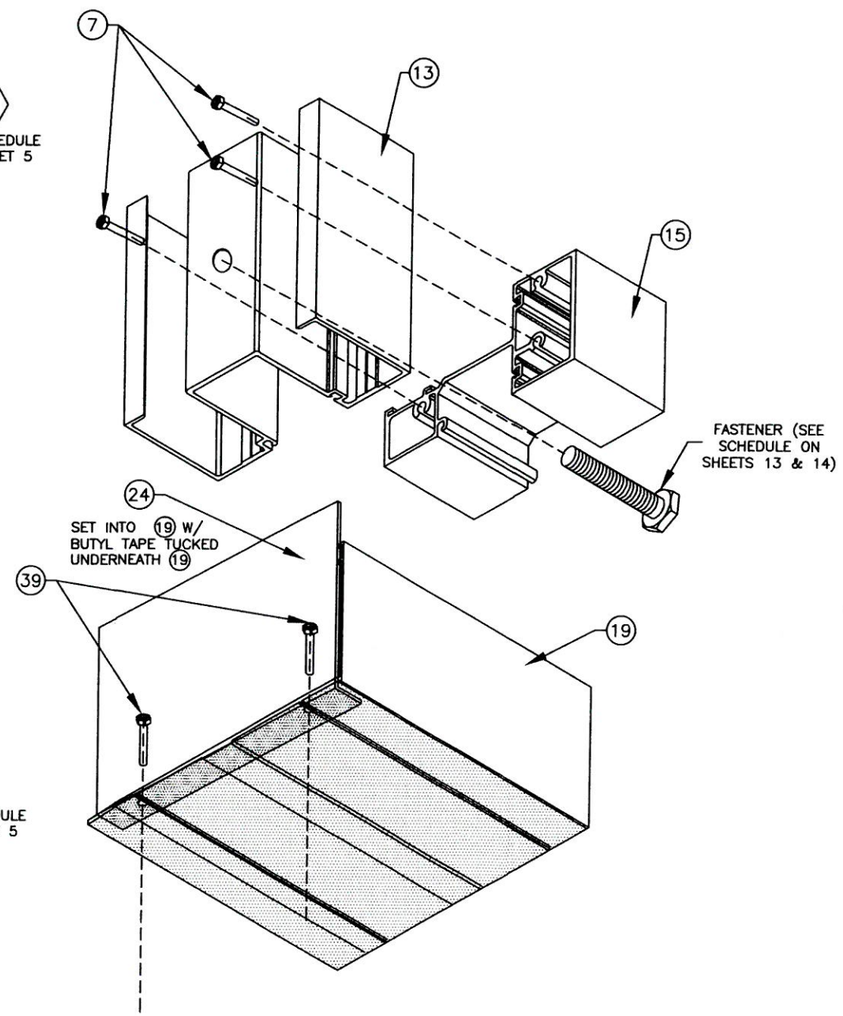

VIEW "X"
(ISOMETRIC)

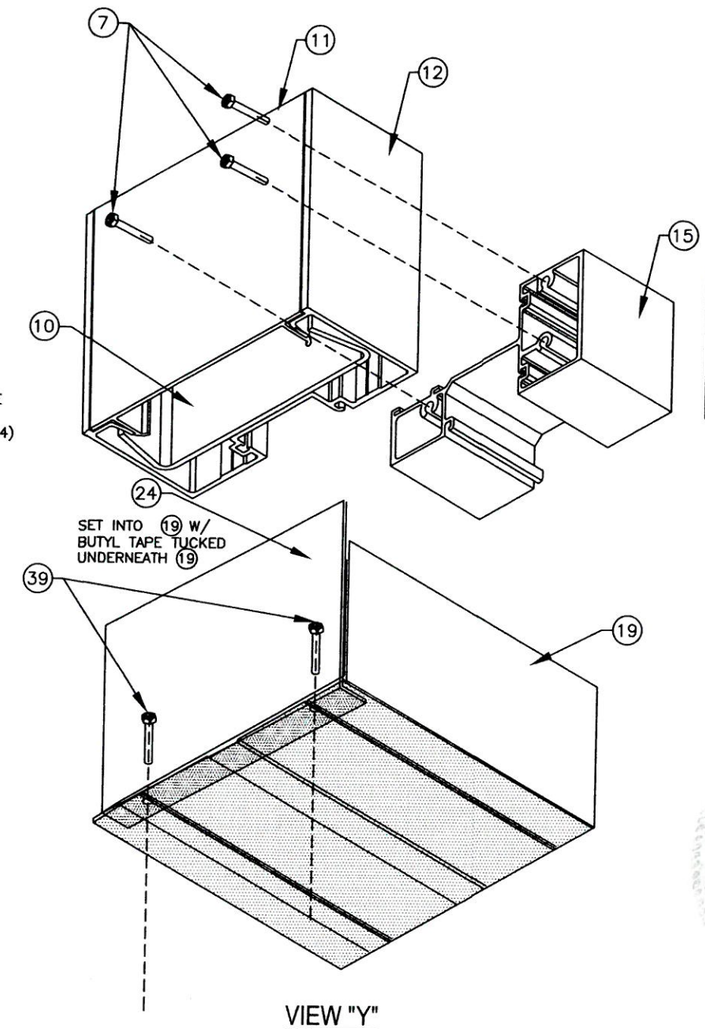

VIEW "Y"
(ISOMETRIC)

TEXAS DEPARTMENT OF INSURANCE – 2006

SERIES FG-5100 FLUSH GLAZED ALUMINUM WINDOW WALL SYSTEM
LARGE & SMALL MISSILE IMPACT LAMINATED OR INSULATED WET & INSULATED DRY GLAZED

Oldcastle BuildingEnvelope™
803 AIRPORT RD. TERRELL, TX 75160
www.OldcastleBE.com-Phone: 800-869-4567

REV. No.	DESCRIPTION	DATE	REV. No.	DESCRIPTION	DATE

DRAWN BY: F.R.L
DATE 12/4/14
DRAWING No 14-086
SHEET 20 OF 20

WALTER A. TILLIT Jr P.E.
PROFESSIONAL ENGINEER
6355 N.W 36 STREET, STE. 305
VIRGINIA GARDENS, FL 33166
PHONE(305) 871-1530 FAX (305) 871-1531
TEXAS LIC. # 90691
FIRM REGISTRATION # F-13790

2/1/16

P.E. SEAL/SIGNATURE/DATE