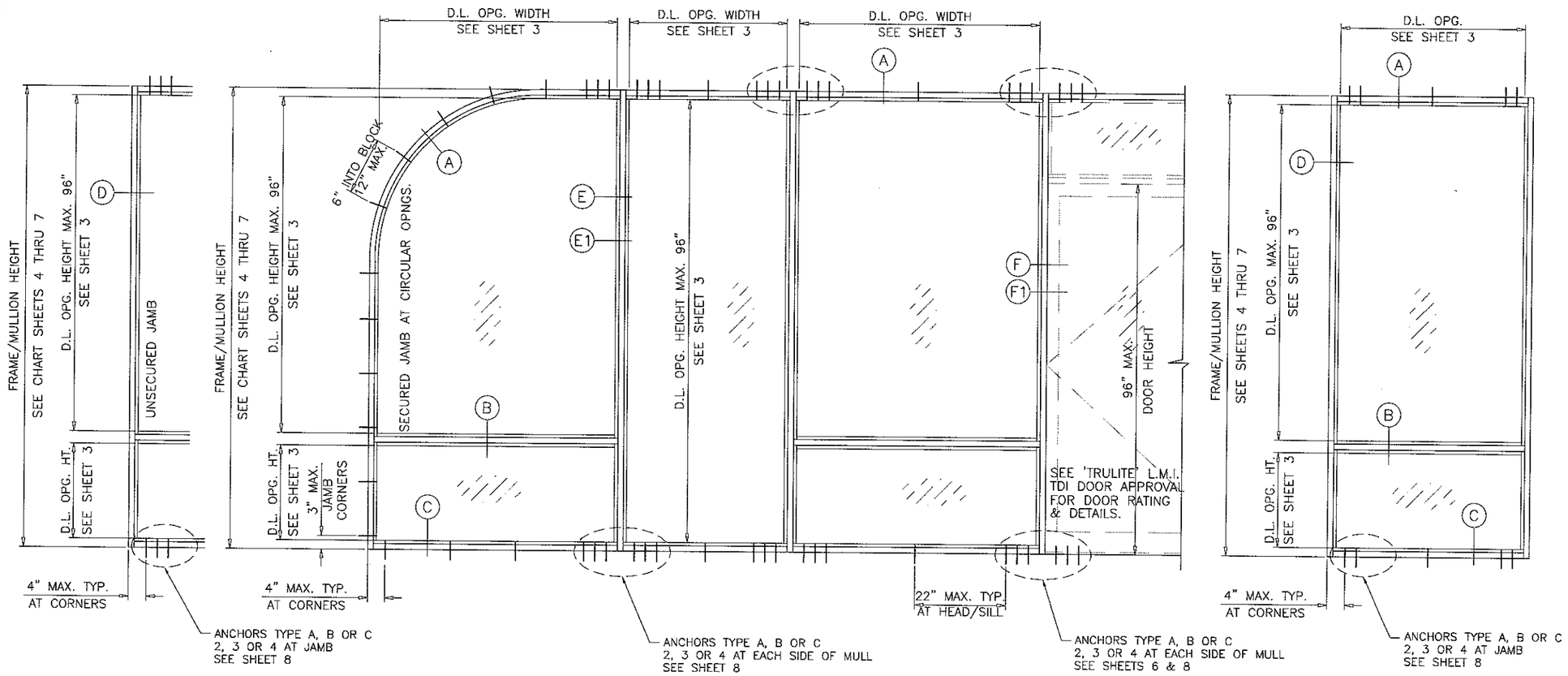

TYPICAL ELEVATIONS

IMPACT WALL 3000/L-3000 ALUMINUM WINDOW WALL SYSTEM INSIDE OR OUTSIDE GLAZED

WINDOW WALL SYSTEM IS RATED FOR LARGE & SMALL MISSILE IMPACT. SHUTTERS ARE NOT REQUIRED.

THIS SYSTEM MAY BE USED IN CONJUNCTION WITH TEXAS DEPARTMENT OF INSURANCE APPROVED ENTRANCE DOORS.

CODE REQUIREMENTS FOR SAFEGUARDS MUST BE OBSERVED.

THIS PRODUCT HAS BEEN DESIGNED AND TESTED TO COMPLY WITH THE REQUIREMENTS OF THE 2006 INTERNATIONAL BUILDING CODE AND 2006 INTERNATIONAL RESIDENTIAL CODE.

ULTIMATE DESIGN LOAD OBTAINED FROM ASCE 7-10, MULTIPLY BY 0.6, SHALL BE LESS THAN OR EQUAL TO MAX. DESIGN LOAD IN THE DOCUMENT.

WOOD BUCKS BY OTHERS, MUST BE ANCHORED PROPERLY TO TRANSFER LOADS TO THE STRUCTURE.

ANCHORS SHALL BE AS LISTED, SPACED AS SHOWN ON DETAILS, ANCHORS EMBEDMENT TO BASE MATERIAL SHALL BE BEYOND WALL DRESSING OR STUCCO.

ANCHORING OR LOADING CONDITIONS NOT SHOWN IN THESE DETAILS ARE NOT PART OF THIS APPROVAL.

A LOAD DURATION INCREASE IS USED IN DESIGN OF ANCHORS INTO WOOD ONLY.

MATERIALS INCLUDING BUT NOT LIMITED TO STEEL/METAL SCREWS, THAT COME INTO CONTACT WITH OTHER DISSIMILAR MATERIALS SHALL MEET THE REQUIREMENTS OF THE 2006 INTERNATIONAL BUILDING CODE AND 2006 INTERNATIONAL RESIDENTIAL CODE SECTION AS APPLICABLE.

INSTRUCTIONS:

USE CHARTS AS FOLLOWS.

STEP 1 DETERMINE DESIGN WIND LOAD REQUIREMENT BASED ON WIND VELOCITY, BLDG. HEIGHT, WIND ZONE USING APPLICABLE ASCE 7 STANDARD.

STEP 2 SEE CHARTS ON SHEET 3 FOR DESIGN LOAD CAPACITY OF DESIRED GLASS SIZE.

STEP 3 CHECK MULLION CAPACITY FOR A GIVEN SPACING AND HEIGHT USING CHARTS ON SHEET 4 THRU 7 THE CAPACITY SHOULD EXCEED THE DESIGN LOAD.

STEP 4 USING CHART ON SHEET 8 SELECT ANCHOR OPTION WITH DESIGN RATING MORE THAN DESIGN LOAD SPECIFIED IN STEP 1 ABOVE.

STEP 5 THE LOWEST VALUE RESULTING FROM STEPS 2, 3 AND 4 SHALL APPLY TO ENTIRE SYSTEM.

PRODUCT COMPLIES WITH REQUIREMENTS OF ANSI Z97.1.

Trulite
GLASS & ALUMINUM SOLUTIONS™
http://www.trulite.com
800 FAIRWAY DRIVE, Suite 200
DEERFIELD BEACH, FL 33441
p. 800-432-8132 | f. 954-724-2083

PRODUCT:

Resistor
3000 ALUMINUM
STOREFRONT WALL-LMI

Resistor
PRODUCT SERIES

REVN	DATE/REMARKS
Rev.1	7/16/15 PER TDI COMMENTS

ENGINEER:
MCY ENGINEERING, INC.
GLAZING CONSULTANT
8501 SW 124TH AVE. STE. 205A
MIAMI, FL 33183
P: (305) 271-0117
Email: MCY.Engineering@att.net
www.MCYEngineering.com

STAMP:

JOO P. PANG, P.E.
TEXAS REGISTRATION
#90246

STATE OF TEXAS
JOO PIN PANG
90246
LICENSED
PROFESSIONAL ENGINEER
07/21/15

PRODUCT CONTROL APPROVAL:

DRAWN: T.G.	DRAWING No:
DATE: 4-29-14	1 OF 11
DWG: TAD14-01	

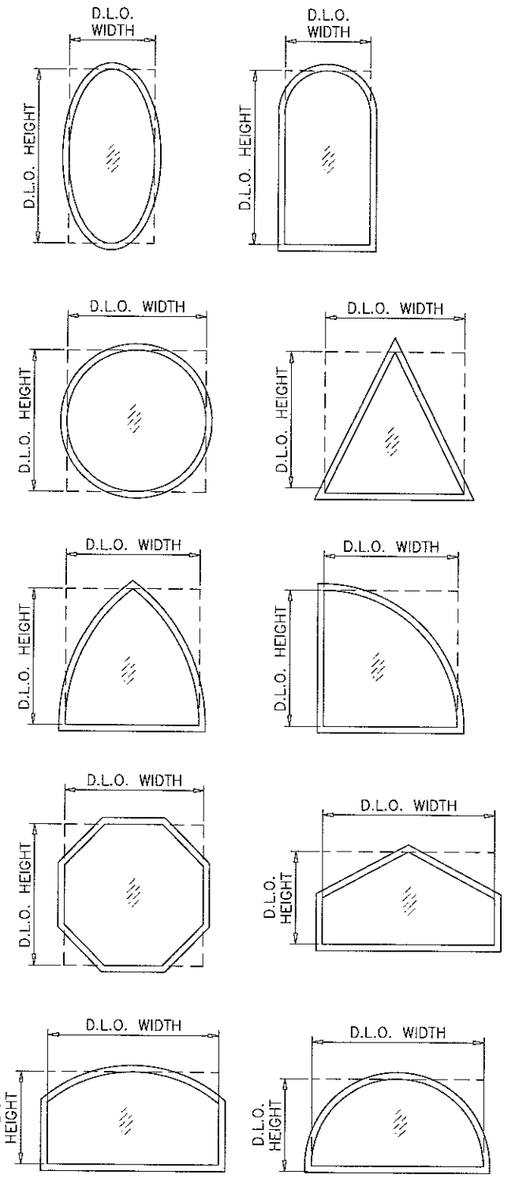

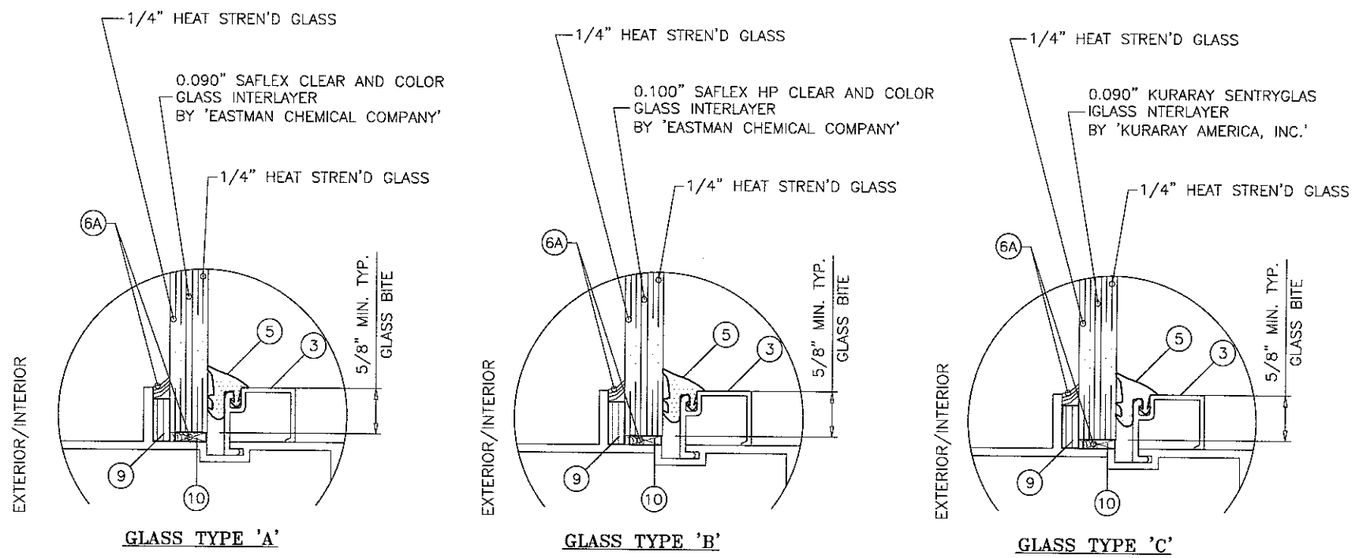

GLAZING OPTIONS

9/16" OVERALL LAMINATED GLASS

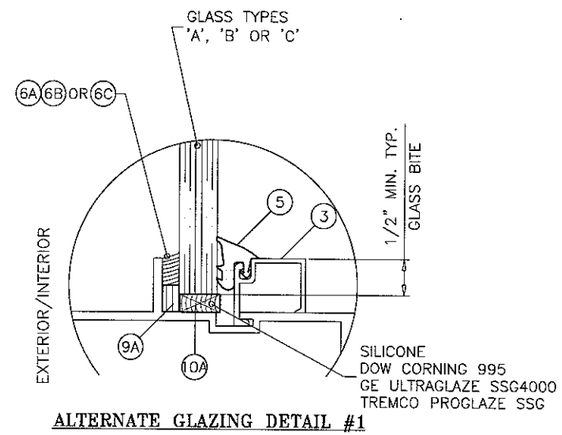

ALTERNATE GLAZING DETAIL #1

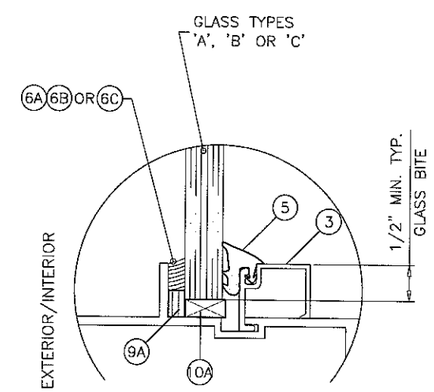

ALTERNATE GLAZING DETAIL #2

FOR GLAZING DETAIL #2 ONLY
LIMIT MAX. LOADS TO ±50.0 PSF
LIMIT MAX. GLASS AREA TO 29 SQ. FT.

ALLOWABLE LOADS FOR ALTERNATE SHAPES AS SHOWN ABOVE OR SIMILAR CAN BE VERIFIED BY INSCRIBING PICTURE WINDOW SHAPE WITHIN SQUARE OR RECTANGLE AS SHOWN IN DOTTED LINES AND OBTAINING ALLOWABLE LOADS FROM THOSE SHAPES. SINGLE LITES MAY BE INSTALLED VERTICALLY AS SHOWN ABOVE OR HORIZONTALLY.

FOR ALTERNATE SHAPES LIMIT MAX. LOADS TO ±90.0 PSF

SEE SHEET 3 FOR D.L.O. WIDTHS AND HEIGHTS.
USE ANCHOR TYPES A, B OR C AT 4" FROM FRAME ENDS AND 12" O.C. MAX. SPACING.

SILICONE SEALANT OPTIONS:
(6A) DOW CORNING 995
(6B) GE ULTRAGLAZE SSG4000
(6C) TREMCO PROGLAZE SSG

GLAZING OPTION

Trulite
GLASS & ALUMINUM SOLUTIONS™
http://www.trulite.com
800 FAIRWAY DRIVE, Suite 200
DEERFIELD BEACH, FL 33441
p. 800-432-8132 | f. 954-724-2083

PRODUCT:

Resistor
3000 ALUMINUM
STOREFRONT WALL-LMI

Resistor PRODUCT SERIES

REVN	DATE/REMARKS
Rev.1	7/16/15 PER TDI COMMENTS

ENGINEER:
MCY ENGINEERING, INC.
GLAZING CONSULTANT
8501 SW 124TH AVE. STE. 205A
MIAMI, FL 33183
P: (305) 271-0117
Email: MCY.Engineering@att.net
www.MCYEngineering.com

STAMP:

JOO P. PANG, P.E.
TEXAS REGISTRATION
P.E. #90246
STATE OF TEXAS
JOO PIN PANG
90246
LICENSED
PROFESSIONAL ENGINEER
07/21/15

PRODUCT CONTROL APPROVAL:

DRAWN: T.G.	DRAWING No:
DATE: 4-29-14	2 OF 11
DWG: TAD14-01	

DESIGN LOAD CAPACITY – PSF				
NOMINAL DIMS.		GLASS TYPE 'A'	GLASS TYPE 'B'	GLASS TYPE 'C'
D.L.O. WIDTH	D.L.O. HEIGHT	EXT. (+) INT. (–)	EXT. (+) INT. (–)	EXT. (+) INT. (–)
36"	87"	87.0	100.0	100.0
39"		87.0	100.0	100.0
42"		87.0	100.0	100.0
45"		87.0	100.0	100.0
48"		87.0	100.0	100.0
51"		87.0	100.0	100.0
54"		87.0	100.0	100.0
57"		87.0	100.0	100.0
60"		87.0	100.0	100.0
63"		87.0	100.0	100.0
66"		87.0	100.0	100.0
69"		87.0	100.0	100.0
72"		87.0	100.0	100.0
36"	90"	87.0	100.0	100.0
39"		87.0	100.0	100.0
42"		87.0	100.0	100.0
45"		87.0	100.0	100.0
48"		87.0	100.0	100.0
51"		87.0	100.0	100.0
54"		87.0	100.0	100.0
57"		87.0	100.0	100.0
60"		87.0	100.0	100.0
63"		87.0	100.0	100.0
66"		87.0	100.0	100.0
69"		87.0	100.0	100.0
72"		87.0	100.0	100.0
36"	93"	87.0	100.0	100.0
39"		87.0	100.0	100.0
42"		87.0	100.0	100.0
45"		87.0	100.0	100.0
48"		87.0	100.0	100.0
51"		87.0	100.0	100.0
54"		87.0	100.0	100.0
57"		87.0	100.0	100.0
60"		87.0	100.0	100.0
63"		87.0	100.0	100.0
66"		87.0	100.0	100.0
69"		87.0	100.0	100.0
72"		87.0	100.0	–
36"	96"	87.0	100.0	100.0
39"		87.0	100.0	100.0
42"		87.0	100.0	100.0
45"		87.0	100.0	100.0
48"		87.0	100.0	100.0
51"		87.0	100.0	100.0
54"		87.0	100.0	100.0
57"		87.0	100.0	100.0
60"		87.0	100.0	100.0
63"		87.0	100.0	100.0
66"		87.0	100.0	100.0
69"		87.0	100.0	–

DESIGN LOAD CAPACITY – PSF				
NOMINAL DIMS.		GLASS TYPE 'A'	GLASS TYPE 'B'	GLASS TYPE 'C'
D.L.O. WIDTH	D.L.O. HEIGHT	EXT. (+) INT. (–)	EXT. (+) INT. (–)	EXT. (+) INT. (–)
36"	99"	87.0	100.0	100.0
39"		87.0	100.0	100.0
42"		87.0	100.0	100.0
45"		87.0	100.0	100.0
48"		87.0	100.0	100.0
51"		87.0	100.0	100.0
54"		87.0	100.0	100.0
57"		87.0	100.0	100.0
60"		87.0	100.0	100.0
63"		87.0	100.0	100.0
66"		87.0	100.0	–
36"	102"	87.0	100.0	100.0
39"		87.0	100.0	100.0
42"		87.0	100.0	100.0
45"		87.0	100.0	100.0
48"		87.0	100.0	100.0
51"		87.0	100.0	100.0
54"		87.0	100.0	100.0
57"		87.0	100.0	100.0
60"		87.0	100.0	100.0
63"		87.0	100.0	100.0
66"		87.0	100.0	–
36"	105"	87.0	100.0	100.0
39"		87.0	100.0	100.0
42"		87.0	100.0	100.0
45"		87.0	100.0	100.0
48"		87.0	100.0	100.0
51"		87.0	100.0	100.0
54"		87.0	100.0	100.0
57"		87.0	100.0	100.0
60"		87.0	100.0	100.0
63"		87.0	100.0	–
36"	108"	87.0	100.0	100.0
39"		87.0	100.0	100.0
42"		87.0	100.0	100.0
45"		87.0	100.0	100.0
48"		87.0	100.0	100.0
51"		87.0	100.0	100.0
54"		87.0	100.0	100.0
57"		87.0	100.0	100.0
60"		87.0	100.0	100.0
63"		87.0	100.0	–
36"	111"	87.0	100.0	100.0
39"		87.0	100.0	100.0
42"		87.0	100.0	100.0
45"		87.0	100.0	100.0
48"		87.0	100.0	100.0
51"		87.0	100.0	100.0
54"		87.0	100.0	100.0
57"		87.0	100.0	100.0
60"		87.0	100.0	–

DESIGN LOAD CAPACITY – PSF				
NOMINAL DIMS.		GLASS TYPE 'A'	GLASS TYPE 'B'	GLASS TYPE 'C'
D.L.O. WIDTH	D.L.O. HEIGHT	EXT. (+) INT. (–)	EXT. (+) INT. (–)	EXT. (+) INT. (–)
36"	114"	87.0	100.0	100.0
39"		87.0	100.0	100.0
42"		87.0	100.0	100.0
45"		87.0	100.0	100.0
48"		87.0	100.0	100.0
51"		87.0	100.0	100.0
54"		87.0	100.0	100.0
56"		87.0	100.0	97.9
57"		87.0	100.0	–
36"	117"	87.0	100.0	100.0
39"		87.0	100.0	100.0
42"		87.0	100.0	100.0
45"		87.0	100.0	100.0
48"		87.0	100.0	100.0
51"		87.0	100.0	100.0
54"		87.0	100.0	100.0
57"		87.0	100.0	–
36"	120"	87.0	100.0	100.0
39"		87.0	100.0	100.0
42"		87.0	100.0	100.0
45"		87.0	100.0	100.0
48"		87.0	100.0	100.0
51"		87.0	100.0	100.0
54"		87.0	98.5	98.5

NOTE:
GLASS CAPACITIES ON THIS SHEET ARE BASED ON ASTM E1300–09 (3 SEC. GUSTS)

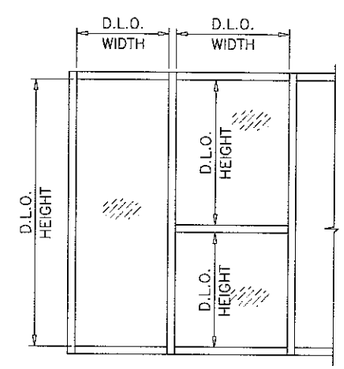

STEP 2: GLASS LOAD TABLES

Trulite
GLASS & ALUMINUM SOLUTIONS™
http://www.trulite.com
800 FAIRWAY DRIVE, Suite 200
DEERFIELD BEACH, FL 33441
p. 800-432-8132 | f. 954-724-2083

PRODUCT:

Resistor
3000 ALUMINUM
STOREFRONT WALL-LMI

Resistor
PRODUCT SERIES

REVN	DATE/REMARKS
Rev.1	7/16/15 PER TDI COMMENTS

ENGINEER:
MCY ENGINEERING, INC.
GLAZING CONSULTANT
8501 SW 124TH AVE. STE. 205A
MIAMI, FL 33183
P: (305) 271-0117
Email: MCY.Engineering@att.net
www.MCYEngineering.com

STAMP:

PRODUCT CONTROL APPROVAL:

DRAWN: T.C.	DRAWING No:
DATE: 4–29–14	3 OF 11
DWG: TAD14–01	

MULLION LOAD CAPACITY – PSF
WITHOUT INTERMEDIATE HORIZONTALS

NOMINAL DIMS.		WITHOUT REINFORCING	WITH REINFORCING
WIDTH (W)	FRAME HEIGHT	EXT.(+) / INT.(–)	EXT.(+) / INT.(–)
24"	78"	87.5	100.0
30"		87.5	100.0
36"		87.5	100.0
42"		87.5	100.0
48"		87.5	100.0
54"		87.5	100.0
60"		87.5	100.0
66"		87.5	100.0
72"		87.5	100.0
24"	84"	87.5	100.0
30"		87.5	100.0
36"		87.5	100.0
42"		87.5	100.0
48"		87.5	100.0
54"		87.5	100.0
60"		85.6	100.0
66"		81.3	100.0
72"		78.5	100.0
24"	90"	87.5	100.0
30"		87.5	100.0
36"		87.5	100.0
42"		87.5	100.0
48"		81.7	100.0
54"		75.0	100.0
60"		70.1	100.0
66"		66.5	100.0
72"		63.9	100.0
24"	96"	87.5	100.0
30"		87.5	100.0
36"		84.4	100.0
42"		73.9	100.0
48"		66.3	100.0
54"		60.7	100.0
60"		56.4	100.0
66"		53.2	100.0
72"		50.8	100.0
24"	102"	87.5	100.0
30"		82.6	100.0
36"		69.9	100.0
42"		61.0	100.0
48"		54.6	100.0
54"		49.8	100.0
60"		46.1	95.9
66"		43.3	90.0
72"		–	85.6

MULLION LOAD CAPACITY – PSF
WITHOUT INTERMEDIATE HORIZONTALS

NOMINAL DIMS.		WITHOUT REINFORCING	WITH REINFORCING
WIDTH (W)	FRAME HEIGHT	EXT.(+) / INT.(–)	EXT.(+) / INT.(–)
24"	108"	85.7	100.0
30"		69.3	100.0
36"		58.5	100.0
42"		51.0	100.0
48"		45.5	94.7
54"		41.4	86.1
60"		38.2	79.5
66"		35.7	74.3
24"	114"	72.7	100.0
30"		58.7	100.0
36"		49.6	100.0
42"		43.1	89.7
48"		38.4	79.8
54"		34.8	72.4
60"		32.0	66.7
24"	120"	62.2	100.0
30"		50.2	100.0
36"		42.3	88.0
42"		36.8	76.5
48"		32.7	68.0
54"		29.6	61.5
60"		27.2	56.5

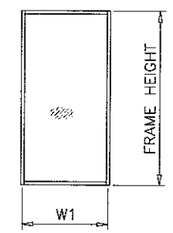

WIDTH (W) = W1 (JAMB)

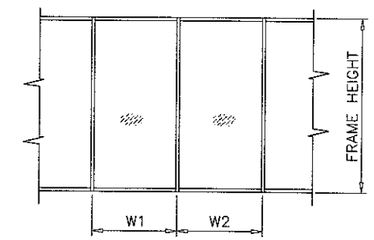

WIDTH (W) = $\frac{W1 + W2}{2}$

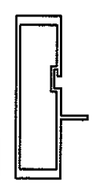

	Ix IN^4	Sx IN^3
ALUM	4.0975	1.8066

FRAME JAMB DOOR MULLION

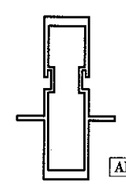

	Ix IN^4	Sx IN^3
ALUM	4.1419	1.8138

INTERMEDIATE MULLION

WITHOUT REINFORCING

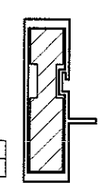

	Ix IN^4	Sx IN^3
ALUM	8.5717	3.7792

FRAME JAMB DOOR MULLION

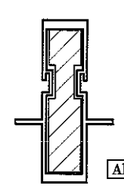

	Ix IN^4	Sx IN^3
ALUM	8.6161	3.7730

INTERMEDIATE MULLION

WITH REINFORCING

STEP 3: MULLION LOAD CAPACITIES

Trulite
GLASS & ALUMINUM SOLUTIONS™
http://www.trulite.com
800 FAIRWAY DRIVE, Suite 200
DEERFIELD BEACH, FL 33441
p. 800-432-8132 | f. 954-724-2083

PRODUCT:

Resistor
3000 ALUMINUM
STOREFRONT WALL-LMI

Resistor
PRODUCT SERIES

REVN	DATE/REMARKS
Rev.1	7/16/15 PER TDI COMMENTS

ENGINEER:
MCY ENGINEERING, INC.
GLAZING CONSULTANT
8501 SW 124TH AVE. STE. 205A
MIAMI, FL 33183
P: (305) 271-0117
Email: MCY.Engineering@att.net
www.MCYEngineering.com

STAMP:

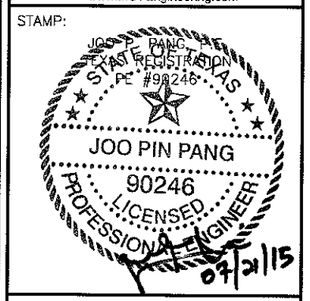

PRODUCT CONTROL APPROVAL:

DRAWN: T.C.	DRAWING No:
DATE: 4–29–14	4 OF 11
DWG: TAD14–01	

MULLION LOAD CAPACITY – PSF WITH INTERMEDIATE HORIZONTALS

NOMINAL DIMS.		WITHOUT REINFORCING	WITH REINFORCING
WIDTH (W)	FRAME HEIGHT	EXT.(+) / INT.(–)	EXT.(+) / INT.(–)
24"	78"	87.5	100.0
30"		87.5	100.0
36"		87.5	100.0
42"		87.5	100.0
48"		87.5	100.0
54"		87.5	100.0
60"		82.9	100.0
66"		75.4	100.0
72"		69.1	100.0
24"	84"	87.5	100.0
30"		87.5	100.0
36"		87.5	100.0
42"		87.5	100.0
48"		87.5	100.0
54"		79.0	100.0
60"		71.1	100.0
66"		64.6	100.0
72"		59.2	100.0
24"	90"	87.5	100.0
30"		87.5	100.0
36"		87.5	100.0
42"		83.1	100.0
48"		72.7	100.0
54"		64.6	100.0
60"		58.2	100.0
66"		52.9	100.0
72"		48.5	100.0
24"	96"	87.5	100.0
30"		87.5	100.0
36"		79.9	100.0
42"		68.5	100.0
48"		59.9	100.0
54"		53.3	100.0
60"		47.9	99.7
66"		43.6	90.7
72"		39.9	83.1
24"	102"	87.5	100.0
30"		79.9	100.0
36"		66.6	100.0
42"		57.1	100.0
48"		50.0	100.0
54"		44.4	92.4
60"		40.0	83.1
66"		36.3	75.6
72"		–	69.3

MULLION LOAD CAPACITY – PSF WITH INTERMEDIATE HORIZONTALS

NOMINAL DIMS.		WITHOUT REINFORCING	WITH REINFORCING
WIDTH (W)	FRAME HEIGHT	EXT.(+) / INT.(–)	EXT.(+) / INT.(–)
24"	108"	84.2	100.0
30"		67.3	100.0
36"		56.1	100.0
42"		48.1	100.0
48"		42.1	87.5
54"		37.4	77.8
60"		33.7	70.0
66"		30.6	63.7
24"	114"	71.6	100.0
30"		57.3	100.0
36"		47.7	99.3
42"		40.9	85.1
48"		35.8	74.4
54"		31.8	66.2
60"		28.6	59.6
24"	120"	61.4	100.0
30"		49.1	100.0
36"		40.9	85.1
42"		35.1	72.9
48"		30.7	63.8
54"		27.3	56.7
60"		24.5	51.1

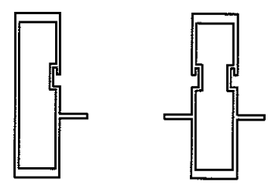

FRAME JAMB DOOR MULLION — INTERMEDIATE MULLION

WITHOUT REINFORCING

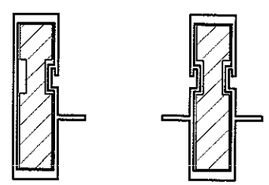

FRAME JAMB DOOR MULLION — INTERMEDIATE MULLION

WITH REINFORCING

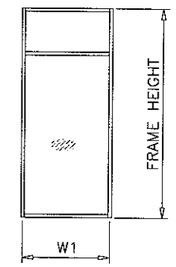

WIDTH (W) = W1 (JAMB)

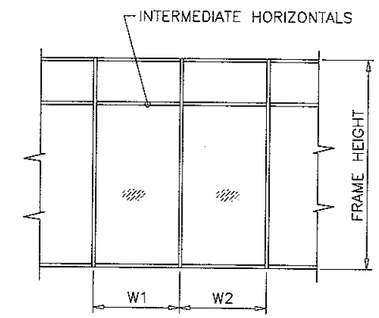

$$\text{WIDTH (W)} = \frac{W1 + W2}{2}$$

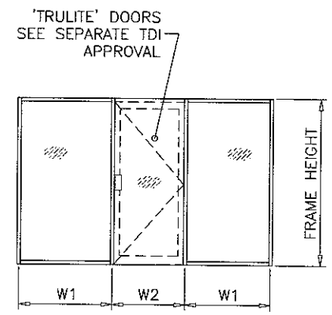

$$\text{WIDTH (W)} = \frac{W1 + W2}{2}$$

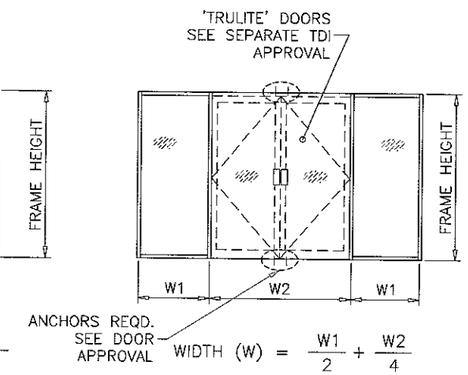

$$\text{WIDTH (W)} = \frac{W1}{2} + \frac{W2}{4}$$

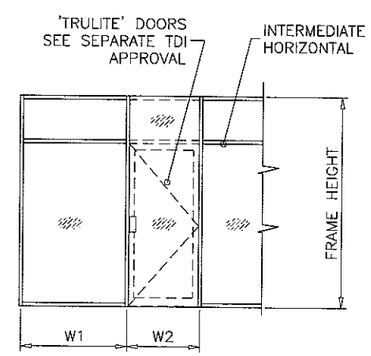

$$\text{WIDTH (W)} = \frac{W1 + W2}{2}$$

STEP 3: MULLION LOAD CAPACITIES

Trulite
GLASS & ALUMINUM SOLUTIONS™
http://www.trulite.com
800 FAIRWAY DRIVE, Suite 200
DEERFIELD BEACH, FL 33441
p. 800-432-8132 | f. 954-724-2083

PRODUCT:

Resistor
3000 ALUMINUM
STOREFRONT WALL-LMI

Resistor PRODUCT SERIES

REVN	DATE/REMARKS
Rev.1	7/16/15 PER TDI COMMENTS

ENGINEER:
MCY ENGINEERING, INC.
GLAZING CONSULTANT
8501 SW 124TH AVE. STE. 205A
MIAMI, FL 33183
P: (305) 271-0117
Email: MCY.Engineering@att.net
www.MCYEngineering.com

STAMP:

JOO PIN PANG, P.E.
TEXAS REGISTRATION
PE. #90246
STATE OF TEXAS
JOO PIN PANG
90246
LICENSED
PROFESSIONAL ENGINEER
07/21/15

PRODUCT CONTROL APPROVAL:

DRAWN: T.G.	DRAWING No:
DATE: 4–29–14	5 OF 11
DWG: TAD14–01	

MULLION LOAD CAPACITY – PSF AT DOUBLE DOOR WITH TRANSOM

NOMINAL DIMS.				WITHOUT REINFORCING	WITH REINFORCING
WIDTH (W1)	WIDTH (W2)	LENGTH (A)	LENGTH (L)	EXT.(+) INT.(−)	EXT.(+) INT.(−)
60"	30"	96"	102"	71.1	87.5
	33"			68.1	87.5
	36"			65.3	87.5
	39"			62.7	87.5
	42"			60.3	87.5
	48"			56.0	87.5
	54"			52.3	87.5
72"	30"			64.5	87.5
	33"			62.0	87.5
	36"			59.6	87.5
	39"			57.5	87.5
	42"			55.5	87.5
	48"			51.8	87.5
	54"			48.6	87.5
60"	30"	96"	108"	56.8	87.5
	33"			54.5	87.5
	36"			52.4	87.5
	39"			50.4	87.5
	42"			48.6	87.5
	48"			45.3	87.5
	54"			42.4	87.5
72"	30"			51.3	87.5
	33"			49.4	87.5
	36"			47.6	87.5
	39"			46.0	87.5
	42"			44.5	87.5
	48"			41.7	87.2
	54"			39.2	82.1
60"	30"	96"	114"	46.2	87.5
	33"			44.4	87.5
	36"			42.8	87.5
	39"			41.2	86.2
	42"			39.8	83.2
	48"			37.2	77.7
	54"			34.9	72.9
72"	30"			41.6	87.5
	33"			40.1	83.9
	36"			38.8	81.1
	39"			37.5	78.4
	42"			36.3	75.9
	48"			34.1	71.3
	54"			32.2	67.3

MULLION LOAD CAPACITY – PSF AT DOUBLE DOOR WITH TRANSOM

NOMINAL DIMS.				WITHOUT REINFORCING	WITH REINFORCING
WIDTH (W1)	WIDTH (W2)	LENGTH (A)	LENGTH (L)	EXT.(+) INT.(−)	EXT.(+) INT.(−)
60"	30"	96"	120"	38.3	80.0
	33"			36.8	77.0
	36"			35.5	74.2
	39"			34.2	71.6
	42"			33.1	69.1
	48"			31.0	64.7
	54"			29.1	60.9
72"	30"			34.3	71.8
	33"			33.2	69.3
	36"			32.1	67.1
	39"			31.0	64.9
	42"			30.1	62.9
	48"			28.3	59.2

ANCHORS TYPE	TOTAL NO. OF ANCHORS AT DOOR MULLION HEAD			
	REINF. MULLION		UN–REINF. MULLION	
	AT FIX. LITE	AT DOOR	AT FIX. LITE	AT DOOR
A	4	3	3	2
B	3	3	2	2
C	3	2	2	2

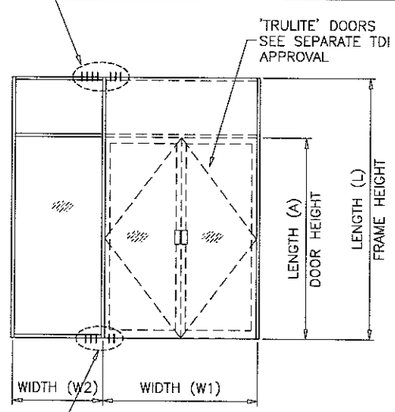

ANCHORS TYPE	TOTAL NO. OF ANCHORS AT DOOR MULLION HEAD			
	REINF. MULLION		UN–REINF. MULLION	
	AT FIX. LITE	AT DOOR	AT FIX. LITE	AT DOOR
A	3	2	2	2
B	3	2	2	2

MULLION LOAD CAPACITY – PSF AT DOUBLE DOOR WITH TRANSOM

NOMINAL DIMS.				WITHOUT REINFORCING	WITH REINFORCING
WIDTH (W1)	WIDTH (W2)	LENGTH (A)	LENGTH (L)	EXT.(+) INT.(−)	EXT.(+) INT.(−)
60"	30"	90"	96"	85.0	87.5
	33"			81.3	87.5
	36"			78.0	87.5
	39"			74.9	87.5
	42"			72.1	87.5
	48"			67.0	87.5
	54"			62.6	87.5
72"	30"			77.0	87.5
	33"			74.0	87.5
	36"			71.3	87.5
	39"			68.7	87.5
	42"			66.3	87.5
	48"			62.0	87.5
	54"			58.2	87.5
60"	30"	90"	102"	67.0	87.5
	33"			64.3	87.5
	36"			61.8	87.5
	39"			59.5	87.5
	42"			57.3	87.5
	48"			53.5	87.5
	54"			50.1	87.5
72"	30"			60.5	87.5
	33"			58.3	87.5
	36"			56.2	87.5
	39"			54.3	87.5
	42"			52.5	87.5
	48"			49.2	87.5
	54"			46.3	87.5
60"	30"	90"	108"	54.0	87.5
	33"			51.9	87.5
	36"			49.9	87.5
	39"			48.1	87.5
	42"			46.5	87.5
	48"			43.4	87.5
	54"			40.8	85.3
72"	30"			48.5	87.5
	33"			46.8	87.5
	36"			45.2	87.5
	39"			43.7	87.5
	42"			42.4	87.5
	48"			39.8	83.3
	54"			37.6	78.6

MULLION LOAD CAPACITY – PSF AT DOUBLE DOOR WITH TRANSOM

NOMINAL DIMS.				WITHOUT REINFORCING	WITH REINFORCING
WIDTH (W1)	WIDTH (W2)	LENGTH (A)	LENGTH (L)	EXT.(+) INT.(−)	EXT.(+) INT.(−)
60"	30"	90"	114"	44.3	87.5
	33"			42.6	87.5
	36"			41.1	85.9
	39"			39.6	82.9
	42"			38.3	80.1
	48"			35.9	75.0
	54"			33.7	70.6
72"	30"			39.7	83.0
	33"			38.3	80.2
	36"			37.1	77.6
	39"			35.9	75.1
	42"			34.8	72.8
	48"			32.8	68.6
	54"			31.0	64.8
60"	30"	90"	120"	36.9	77.1
	33"			35.5	74.3
	36"			34.3	71.7
	39"			33.1	69.2
	42"			32.0	67.0
	48"			30.0	62.8
	54"			28.3	59.2
72"	30"			33.0	69.0
	33"			31.9	66.8
	36"			30.9	64.6
	39"			29.9	62.6
	42"			29.0	60.7
	48"			27.4	57.3

STEP 3: MULLION LOAD CAPACITIES

Trulite
GLASS & ALUMINUM SOLUTIONS™
http://www.trulite.com
800 FAIRWAY DRIVE, Suite 200
DEERFIELD BEACH, FL 33441
p. 800-432-8132 | f. 954-724-2083

PRODUCT:

Resistor
3000 ALUMINUM
STOREFRONT WALL-LMI

Resistor
PRODUCT SERIES

REVN	DATE/REMARKS
Rev.1	7/16/15 PER TDI COMMENTS

ENGINEER:
MCY ENGINEERING, INC.
GLAZING CONSULTANT
8501 SW 124TH AVE. STE. 205A
MIAMI, FL 33183
P: (305) 271-0117
Email: MCY.Engineering@att.net
www.MCYEngineering.com

STAMP:

JOO P. PANG, P.E.
TEXAS REGISTRATION #90246
STATE OF TEXAS
JOO PIN PANG
90246
LICENSED
PROFESSIONAL ENGINEER
07/21/15

PRODUCT CONTROL APPROVAL:

DRAWN: T.G.
DATE: 4–29–14
DWG: TAD14–01

DRAWING No:
6 OF 11

MULLION LOAD CAPACITY – PSF AT DOUBLE DOOR WITH TRANSOM

NOMINAL DIMS.				WITHOUT REINFORCING	WITH REINFORCING
WIDTH (W1)	WIDTH (W2)	LENGTH (A)	LENGTH (L)	EXT.(+) INT.(–)	EXT.(+) INT.(–)
60"	30"	84"	90"	87.5	87.5
	33"			87.5	87.5
	36"			87.5	87.5
	39"			87.5	87.5
	42"			87.2	87.5
	48"			81.0	87.5
	54"			75.7	87.5
72"	30"			87.5	87.5
	33"			87.5	87.5
	36"			86.1	87.5
	39"			83.0	87.5
	42"			80.1	87.5
	48"			74.9	87.5
	54"			70.3	87.5
60"	30"	84"	96"	79.8	87.5
	33"			76.6	87.5
	36"			73.7	87.5
	39"			70.9	87.5
	42"			68.4	87.5
	48"			63.8	87.5
	54"			59.8	87.5
72"	30"			72.0	87.5
	33"			69.4	87.5
	36"			66.9	87.5
	39"			64.7	87.5
	42"			62.5	87.5
	48"			58.7	87.5
	54"			55.3	87.5
60"	30"	84"	102"	63.5	87.5
	33"			61.1	87.5
	36"			58.8	87.5
	39"			56.7	87.5
	42"			54.8	87.5
	48"			51.2	87.5
	54"			48.1	87.5
72"	30"			57.1	87.5
	33"			55.1	87.5
	36"			53.2	87.5
	39"			51.5	87.5
	42"			49.9	87.5
	48"			46.9	87.5
	54"			44.3	87.5

MULLION LOAD CAPACITY – PSF AT DOUBLE DOOR WITH TRANSOM

NOMINAL DIMS.				WITHOUT REINFORCING	WITH REINFORCING
WIDTH (W1)	WIDTH (W2)	LENGTH (A)	LENGTH (L)	EXT.(+) INT.(–)	EXT.(+) INT.(–)
60"	30"	84"	108"	51.6	87.5
	33"			49.7	87.5
	36"			47.9	87.5
	39"			46.2	87.5
	42"			44.7	87.5
	48"			41.9	87.5
	54"			39.4	82.4
72"	30"			46.2	87.5
	33"			44.7	87.5
	36"			43.2	87.5
	39"			41.9	87.5
	42"			40.6	84.9
	48"			38.3	80.0
	54"			36.2	75.7
60"	30"	84"	114"	42.6	87.5
	33"			41.1	85.9
	36"			39.6	82.9
	39"			38.3	80.1
	42"			37.1	77.5
	48"			34.8	72.8
	54"			32.8	68.6
72"	30"			38.1	79.7
	33"			36.9	77.1
	36"			35.7	74.7
	39"			34.6	72.4
	42"			33.6	70.3
	48"			31.7	66.3
	54"			30.0	62.8
60"	30"	84"	120"	35.7	74.7
	33"			34.5	72.1
	36"			33.3	69.6
	39"			32.2	67.3
	42"			31.2	65.2
	48"			29.3	61.2
	54"			27.6	57.8
72"	30"			31.9	66.8
	33"			30.9	64.6
	36"			29.9	62.6
	39"			29.0	60.7
	42"			28.2	59.0
	48"			26.6	55.7

MULLION LOAD CAPACITY – PSF AT DOUBLE DOOR WITH TRANSOM

NOMINAL DIMS.				WITHOUT REINFORCING	WITH REINFORCING
WIDTH (W1)	WIDTH (W2)	LENGTH (A)	LENGTH (L)	EXT.(+) INT.(–)	EXT.(+) INT.(–)
60"	30"	80"	90"	87.5	87.5
	33"			87.5	87.5
	36"			87.5	87.5
	39"			87.1	87.5
	42"			83.9	87.5
	48"			78.3	87.5
	54"			73.3	87.5
72"	30"			87.5	87.5
	33"			85.4	87.5
	36"			82.3	87.5
	39"			79.5	87.5
	42"			76.9	87.5
	48"			72.1	87.5
	54"			67.8	87.5
60"	30"	80"	96"	76.9	87.5
	33"			73.9	87.5
	36"			71.1	87.5
	39"			68.5	87.5
	42"			66.2	87.5
	48"			61.9	87.5
	54"			58.1	87.5
72"	30"			69.1	87.5
	33"			66.7	87.5
	36"			64.4	87.5
	39"			62.3	87.5
	42"			60.3	87.5
	48"			56.7	87.5
	54"			53.5	87.5
60"	30"	80"	102"	61.6	87.5
	33"			59.3	87.5
	36"			57.1	87.5
	39"			55.1	87.5
	42"			53.3	87.5
	48"			49.9	87.5
	54"			47.0	87.5
72"	30"			55.2	87.5
	33"			53.3	87.5
	36"			51.6	87.5
	39"			49.9	87.5
	42"			48.4	87.5
	48"			45.6	87.5
	54"			43.1	87.5

MULLION LOAD CAPACITY – PSF AT DOUBLE DOOR WITH TRANSOM

NOMINAL DIMS.				WITHOUT REINFORCING	WITH REINFORCING
WIDTH (W1)	WIDTH (W2)	LENGTH (A)	LENGTH (L)	EXT.(+) INT.(–)	EXT.(+) INT.(–)
60"	30"	80"	108"	50.3	87.5
	33"			48.4	87.5
	36"			46.7	87.5
	39"			45.2	87.5
	42"			43.7	87.5
	48"			41.0	85.8
	54"			38.6	80.8
72"	30"			44.9	87.5
	33"			43.5	87.5
	36"			42.1	87.5
	39"			40.8	85.4
	42"			39.6	82.8
	48"			37.4	78.2
	54"			35.4	74.1
60"	30"	80"	114"	41.7	87.3
	33"			40.2	84.2
	36"			38.9	81.3
	39"			37.6	78.6
	42"			36.4	76.1
	48"			34.2	71.5
	54"			32.2	67.4
72"	30"			37.2	77.9
	33"			36.1	75.4
	36"			34.9	73.1
	39"			33.9	70.9
	42"			32.9	68.9
	48"			31.1	65.1
	54"			29.5	61.7
60"	30"	80"	120"	35.1	73.5
	33"			33.9	70.9
	36"			32.8	68.5
	39"			31.7	66.3
	42"			30.7	64.2
	48"			28.9	60.4
	54"			27.2	57.0
72"	30"			31.3	65.5
	33"			30.3	63.4
	36"			29.4	61.5
	39"			28.5	59.7
	42"			27.7	58.0
	48"			26.2	54.9

STEP 3: MULLION LOAD CAPACITIES

Trulite
GLASS & ALUMINUM SOLUTIONS™
http://www.trulite.com
800 FAIRWAY DRIVE, Suite 200
DEERFIELD BEACH, FL 33441
p. 800-432-8132 | f. 954-724-2083

PRODUCT:

Resistor
3000 ALUMINUM
STOREFRONT WALL-LMI

Resistor
PRODUCT SERIES

REVN	DATE/REMARKS
Rev.1	7/16/15 PER TDI COMMENTS

ENGINEER:
MCY ENGINEERING, INC.
GLAZING CONSULTANT
8501 SW 124TH AVE. STE. 205A
MIAMI, FL 33183
P: (305) 271-0117
Email: MCY.Engineering@att.net
www.MCYEngineering.com

STAMP:

JOO PIN PANG, P.E.
TEXAS REGISTRATION
STATE #90246
STATE OF TEXAS
JOO PIN PANG
90246
LICENSED
PROFESSIONAL ENGINEER
07/21/15

PRODUCT CONTROL APPROVAL:

DRAWN: T.G.	DRAWING No:
DATE: 4–29–14	7 OF 11
DWG: TAD14–01	

ANCHOR LOAD CAPACITY – PSF
EXT.(+) & INT.(–)

NOMINAL DIMS.		ANCHORS TYPE 'A'			ANCHORS TYPE 'B'		ANCHORS TYPE 'C'	
WIDTH (W)	FRAME HEIGHT	'A2'	'A3'	'A4'	'B2'	'B3'	'C2'	'C3'
24"	78"	100.0	100.0	100.0	100.0	100.0	100.0	100.0
30"		100.0	100.0	100.0	100.0	100.0	100.0	100.0
36"		100.0	100.0	100.0	100.0	100.0	100.0	100.0
42"		100.0	100.0	100.0	100.0	100.0	100.0	100.0
48"		90.8	100.0	100.0	100.0	100.0	100.0	100.0
54"		80.7	100.0	100.0	99.0	100.0	100.0	100.0
60"		72.6	100.0	100.0	89.1	100.0	100.0	100.0
66"		66.0	99.0	100.0	81.0	100.0	100.0	100.0
72"		60.5	90.8	100.0	74.3	100.0	98.3	100.0
24"	84"	100.0	100.0	100.0	100.0	100.0	100.0	100.0
30"		100.0	100.0	100.0	100.0	100.0	100.0	100.0
36"		100.0	100.0	100.0	100.0	100.0	100.0	100.0
42"		96.3	100.0	100.0	100.0	100.0	100.0	100.0
48"		84.3	100.0	100.0	100.0	100.0	100.0	100.0
54"		74.9	100.0	100.0	92.0	100.0	100.0	100.0
60"		67.4	100.0	100.0	82.8	100.0	100.0	100.0
66"		61.3	91.9	100.0	75.3	100.0	99.5	100.0
72"		56.2	84.3	100.0	69.0	100.0	91.2	100.0
24"	90"	100.0	100.0	100.0	100.0	100.0	100.0	100.0
30"		100.0	100.0	100.0	100.0	100.0	100.0	100.0
36"		100.0	100.0	100.0	100.0	100.0	100.0	100.0
42"		89.9	100.0	100.0	100.0	100.0	100.0	100.0
48"		78.7	100.0	100.0	96.6	100.0	100.0	100.0
54"		69.9	100.0	100.0	85.8	100.0	100.0	100.0
60"		62.9	94.4	100.0	77.3	100.0	100.0	100.0
66"		57.2	85.8	100.0	70.2	100.0	92.9	100.0
72"		52.4	78.7	100.0	64.4	96.6	85.2	100.0
24"	96"	100.0	100.0	100.0	100.0	100.0	100.0	100.0
30"		100.0	100.0	100.0	100.0	100.0	100.0	100.0
36"		98.3	100.0	100.0	100.0	100.0	100.0	100.0
42"		84.3	100.0	100.0	100.0	100.0	100.0	100.0
48"		73.8	100.0	100.0	90.5	100.0	100.0	100.0
54"		65.6	98.3	100.0	80.5	100.0	100.0	100.0
60"		59.0	88.5	100.0	72.4	100.0	95.8	100.0
66"		53.6	80.5	100.0	65.8	98.8	87.1	100.0
72"		49.2	73.8	98.3	60.4	90.5	79.8	100.0
24"	102"	100.0	100.0	100.0	100.0	100.0	100.0	100.0
30"		100.0	100.0	100.0	100.0	100.0	100.0	100.0
36"		92.5	100.0	100.0	100.0	100.0	100.0	100.0
42"		79.3	100.0	100.0	97.4	100.0	100.0	100.0
48"		69.4	100.0	100.0	85.2	100.0	100.0	100.0
54"		61.7	92.5	100.0	75.7	100.0	100.0	100.0
60"		55.5	83.3	100.0	68.2	100.0	90.2	100.0
66"		50.5	75.7	100.0	62.0	93.0	82.0	100.0
72"		46.3	69.4	92.5	56.8	85.2	75.1	100.0
24"	108"	100.0	100.0	100.0	100.0	100.0	100.0	100.0
30"		100.0	100.0	100.0	100.0	100.0	100.0	100.0
36"		87.4	100.0	100.0	100.0	100.0	100.0	100.0
42"		74.9	100.0	100.0	92.0	100.0	100.0	100.0
48"		65.6	98.3	100.0	80.5	100.0	100.0	100.0
54"		58.3	87.4	100.0	71.5	100.0	94.6	100.0
60"		52.4	78.7	100.0	64.4	96.6	85.2	100.0
66"		47.7	71.5	95.4	58.5	87.8	77.4	100.0

ANCHOR LOAD CAPACITY – PSF
EXT.(+) & INT.(–)

NOMINAL DIMS.		ANCHORS TYPE 'A'			ANCHORS TYPE 'B'		ANCHORS TYPE 'C'	
WIDTH (W)	FRAME HEIGHT	'A2'	'A3'	'A4'	'B2'	'B3'	'C2'	'C3'
24"	114"	100.0	100.0	100.0	100.0	100.0	100.0	100.0
30"		99.4	100.0	100.0	100.0	100.0	100.0	100.0
36"		82.8	100.0	100.0	100.0	100.0	100.0	100.0
42"		71.0	100.0	100.0	87.1	100.0	100.0	100.0
48"		62.1	93.2	100.0	76.2	100.0	100.0	100.0
54"		55.2	82.8	100.0	67.8	100.0	89.6	100.0
60"		49.7	74.5	99.4	61.0	91.5	80.7	100.0
24"	120"	100.0	100.0	100.0	100.0	100.0	100.0	100.0
30"		94.4	100.0	100.0	100.0	100.0	100.0	100.0
36"		78.7	100.0	100.0	96.6	100.0	100.0	100.0
42"		67.4	100.0	100.0	82.8	100.0	100.0	100.0
48"		59.0	88.5	100.0	72.4	100.0	95.8	100.0
54"		52.4	78.7	100.0	64.4	96.6	85.2	100.0
60"		47.2	70.8	94.4	57.9	86.9	76.6	100.0

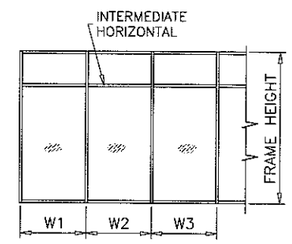

WIDTH (W) = W1
AT FRAME JAMB

WIDTH (W) = $\frac{W2 + W3}{2}$
AT FRAME MULLION

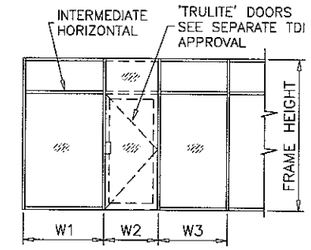

WIDTH (W) = W1
AT FRAME JAMB

WIDTH (W) = $\frac{W2 + W3}{2}$
AT FRAME MULLION

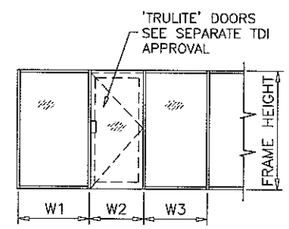

WIDTH (W) = W1
AT FRAME JAMB

WIDTH (W) = $\frac{W2 + W3}{2}$
AT FRAME MULLION

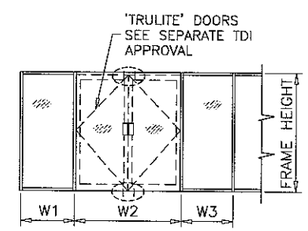

WIDTH (W) = W1
AT FRAME JAMB

WIDTH (W) = $\frac{W2 + W3}{2}$
AT FRAME MULLION

ANCHORS TYPES: SEE SHEET 9 FOR DESCRIPTION

A2 = (2) ANCHORS TYPE 'A' AT JAMB OR EACH SIDE OF MULLION
A3 = (3) ANCHORS TYPE 'A' AT JAMB OR EACH SIDE OF MULLION
A4 = (4) ANCHORS TYPE 'A' AT JAMB OR EACH SIDE OF MULLION

B2 = (2) ANCHORS TYPE 'B' AT JAMB OR EACH SIDE OF MULLION
B3 = (3) ANCHORS TYPE 'B' AT JAMB OR EACH SIDE OF MULLION

C2 = (2) ANCHORS TYPE 'C' AT JAMB OR EACH SIDE OF MULLION
C3 = (3) ANCHORS TYPE 'C' AT JAMB OR EACH SIDE OF MULLION

ALL OTHER ANCHORS TO BE SPACED AS PER ELEVATION.

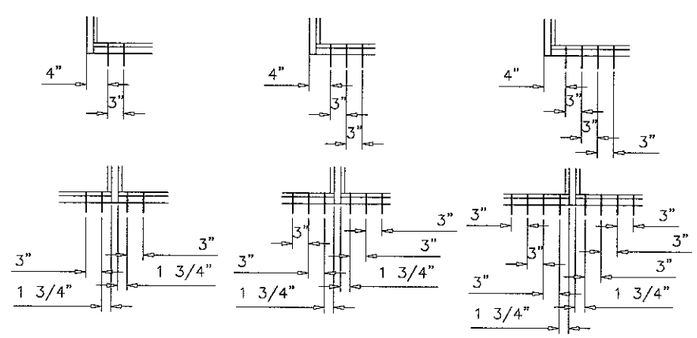

A2, B2, C2 A3, B3, C3 A4

STEP 4: ANCHOR LOAD CAPACITY

Trulite
GLASS & ALUMINUM SOLUTIONS™
http://www.trulite.com
800 FAIRWAY DRIVE, Suite 200
DEERFIELD BEACH, FL 33441
p. 800-432-8132 | f. 954-724-2083

PRODUCT:

Resistor
3000 ALUMINUM
STOREFRONT WALL-LMI

Resistor
PRODUCT SERIES

REVN	DATE/REMARKS
Rev.1	7/16/15 PER TDI COMMENTS

ENGINEER:
MCY ENGINEERING, INC.
GLAZING CONSULTANT
8501 SW 124TH AVE. STE. 205A
MIAMI, FL 33183
P: (305) 271-0117
Email: MCY.Engineering@att.net
www.MCYEngineering.com

STAMP:

JOO P. PANG, P.E.
TEXAS REGISTRATION
NO. 90246

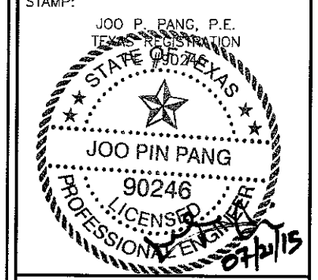

PRODUCT CONTROL APPROVAL:

DRAWN: T.G.
DATE: 4–29–14
DWG: TAD14–01

DRAWING No:
8 OF 11

EXTERIOR OR INTERIOR

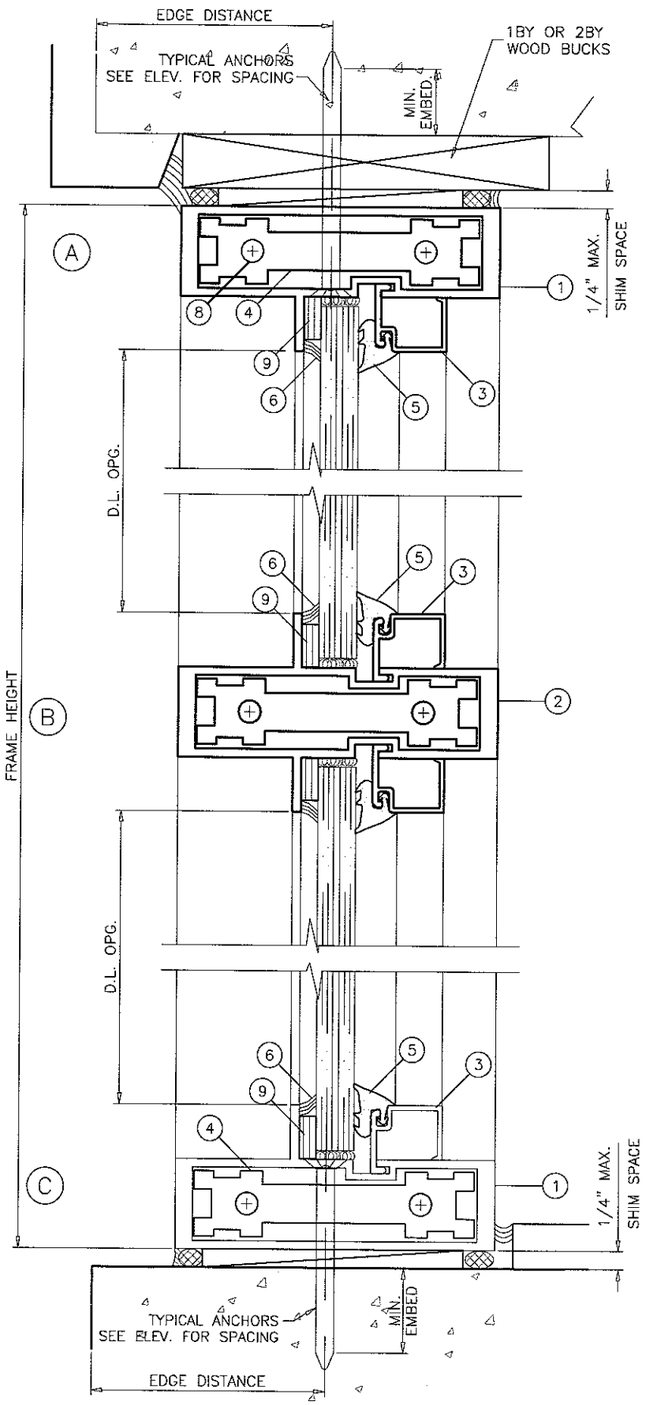

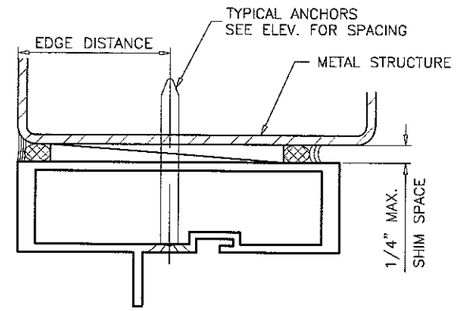

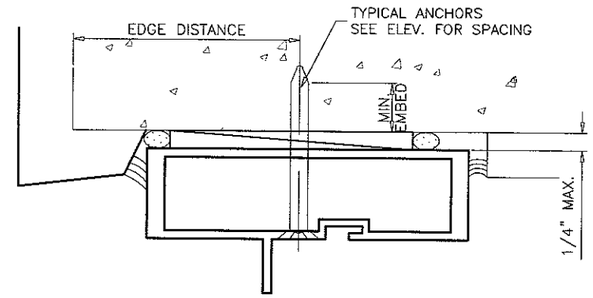

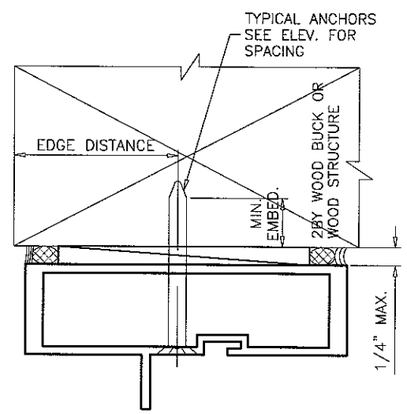

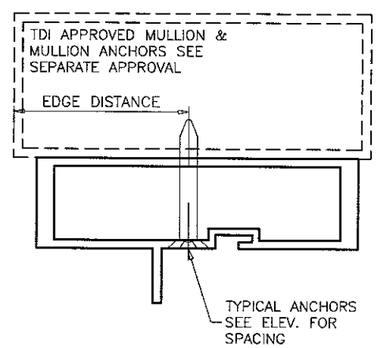

WOOD BUCKS AND METAL STRUCTURES NOT BY TRULITE. MUST SUSTAIN LOADS IMPOSED BY GLAZING SYSTEM AND TRANSFER THEM TO THE BUILDING STRUCTURE.

TYPICAL ANCHORS:

SEE ELEVATIONS FOR SPACING

TYPE 'A' 1/4" DIA. ULTRACON BY 'ELCO' (Fu 177 KSI, Fy=155 KSI)
INTO 2BY WOOD BUCKS OR WOOD STRUCTURES
1-1/2" MIN. PENETRATION INTO WOOD INTO CONC.

THRU WOOD BUCKS INTO CONC. OR MASONRY
1-1/4" MIN. EMBED INTO MASONRY
1-3/8" MIN. EMBED INTO CONC.

TYPE 'B' 1/4" DIA. ULTRACON BY 'ELCO' (Fu 177 KSI, Fy=155 KSI)
DIRECTLY INTO CONCRETE OR MASONRY
1-5/8" MIN. EMBED INTO CONCRETE OR MASONRY.

TYPE 'C' #14 SMS OR SELF DRILLING SCREWS (GRADE 2 CRS)
INTO MIAMI-DADE COUNTY APPROVED MULLIONS
(1/8" THK. MIN.) INTO METAL STRUCTURE.

STEEL : 12 GA. MIN. (Fy = 36 KSI MIN.)
ALUMINUM : 1/8" THK. MIN. (6063-T5 MIN.)
(STEEL IN CONTACT WITH ALUMINUM TO BE PLATED OR PAINTED)

TYPICAL EDGE DISTANCE

INTO CONCRETE AND MASONRY = 2-1/2" MIN.
INTO WOOD STRUCTURE = 1" MIN.
INTO METAL STRUCTURE = 3/4" MIN.

CONCRETE f'C = 3000 PSI MIN.
C-90 HOLLOW/FLLED BLOCK f'm = 2000 PSI MIN.

SEALANTS:

GLAZING BEAD AT FRAME SILL SEALED TO GLASS WITH SILICONE
GLAZING OPTIONS 6A, 6B OR 6C.
FRAME CORNERS SEALED WITH DOW CORNING 999 OR EQUAL COMPATIBLE.

THIS PRODUCT MAY BE INSTALLED INSIDE OR OUTSIDE GLAZED

Trulite
GLASS & ALUMINUM SOLUTIONS™
http://www.trulite.com
800 FAIRWAY DRIVE, Suite 200
DEERFIELD BEACH, FL 33441
p. 800-432-8132 | f. 954-724-2083

PRODUCT:

Resistor
3000 ALUMINUM
STOREFRONT WALL-LMI

Resistor
PRODUCT SERIES

REVN	DATE/REMARKS
Rev.1	7/16/15 PER TDI COMMENTS

ENGINEER:
MCY ENGINEERING, INC.
GLAZING CONSULTANT
8501 SW 124TH AVE. STE. 205A
MIAMI, FL 33183
P: (305) 271-0117
Email: MCY.Engineering@att.net
www.MCYEngineering.com

STAMP:

JOO P. PANG, P.E.
TEXAS REGISTRATION
STATE OF TEXAS
JOO PIN PANG
90246
LICENSED
PROFESSIONAL ENGINEER
07/21/15

PRODUCT CONTROL APPROVAL:

DRAWN: T.G.	DRAWING No:
DATE: 4-29-14	9 OF 11
DWG: TAD14-01	

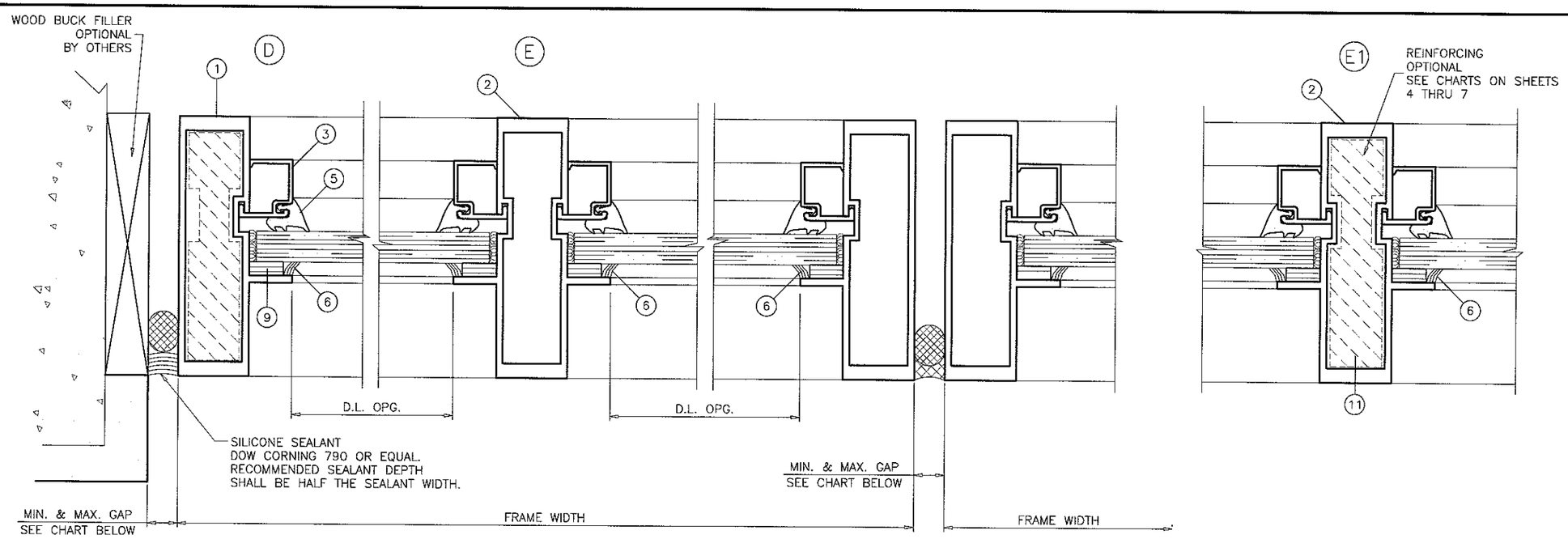

EXTERIOR OR INTERIOR

MAX. FRAME HEIGHT	GAP	
	MIN.	MAX.
60"	3/16"	1/2"
72"	1/4"	1/2"
84"	1/4"	1/2"
96"	3/8"	1/2"
108"	3/8"	1/2"
120"	1/2"	1/2"

MAX. FRAME WIDTH	MAX. GAP AT EACH SIDE
30 FT.	1-1/8"
60 FT.	1-1/8"

ALTERNATE SEALANTS AT JAMB GAPS CAN BE DESIGNED BY ENGINEER OF RECORD BASED ON MANUFACTURER GUIDE LINES.

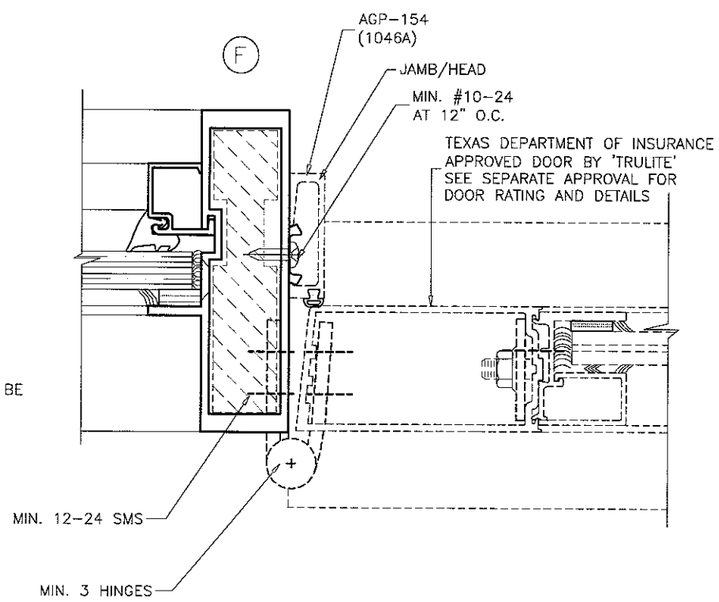

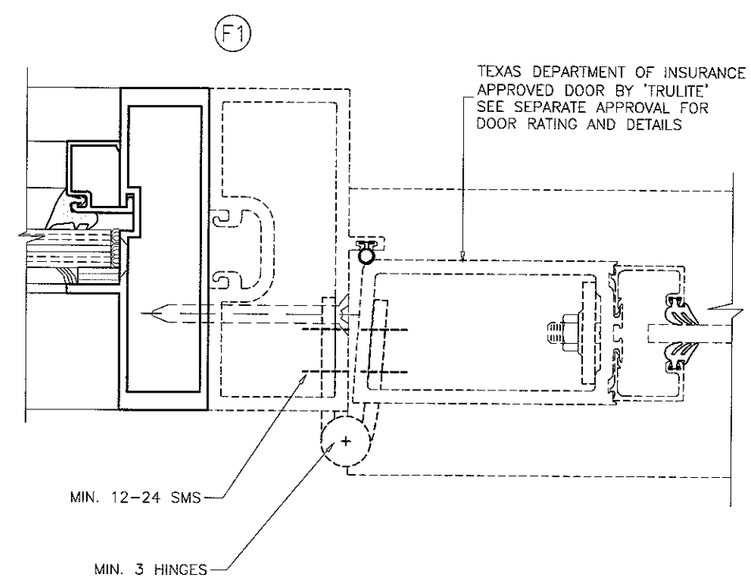

Trulite
GLASS & ALUMINUM SOLUTIONS™
http://www.trulite.com
800 FAIRWAY DRIVE, Suite 200
DEERFIELD BEACH, FL 33441
p. 800-432-8132 | f. 954-724-2083

PRODUCT:

Resistor
3000 ALUMINUM
STOREFRONT WALL-LMI

Resistor
PRODUCT SERIES

REVN	DATE/REMARKS
Rev.1	7/16/15 PER TDI COMMENTS

ENGINEER:
MCY ENGINEERING, INC.
GLAZING CONSULTANT
8501 SW 124TH AVE. STE. 205A
MIAMI, FL 33183
P: (305) 271-0117
Email: MCY.Engineering@att.net
www.MCYEngineering.com

STAMP:
JOO PIN PANG, P.E.
TEXAS REGISTRATION
STATE #90246
STATE OF TEXAS
JOO PIN PANG
90246
LICENSED
PROFESSIONAL ENGINEER
07/21/15

PRODUCT CONTROL APPROVAL:

DRAWN: T.G.	DRAWING No:
DATE: 4-29-14	10 OF 11
DWG: TAD14-01	

BILL OF MATERIALS

ITEM #	QTY.	PROFILE	DESCRIPTION	MATERIAL	MANUFACTURER/REMARKS
1	AS REQD.	3001	FRAME HEAD/SILL/JAMB	ALUM. 6063-T6	TRULITE
2	AS REQD.	3002	INTERMEDIATE MULLION (VERT/HORIZ)	ALUM. 6063-T6	TRULITE
3	AS REQD.	3003	GLAZING STOP	ALUM. 6063-T5	TRULITE
4	1/ CORNER	3004A	SHEAR BLOCK	ALUM. 6063-T6	1" LONG
5	AS REQD.	H-63	GLAZING GASKET	EPDM	–
6A	AS REQD.	DC995	SILICONE SEALANT	SILICONE	DOW CORNING
6B	AS REQD.	SSG4000	SILICONE SEALANT	SILICONE	GE (MOMENTIVE)
6C	AS REQD.	PROGLAZE SSG	SILICONE SEALANT	SILICONE	TREMCO
7	2/ CORNER	S14	#2-24 x 3/4" FLAT HEAD THREAD CUTTING SCREWS	–	–
8	2/ CORNER	P13	1/2-20 x 1-1/2" PAN HEAD MACHINE SCREWS	–	–
9	–	V2100	GLAZING FOAM TAPE	–	NORTON
9A	–	V2200	GLAZING FOAM TAPE	–	NORTON
10	AS REQD.	–	SETTING BLOCK (1/2" x 1/8" x 4" LONG)	EPDM	–
10A	AS REQD.	H62D	SETTING BLOCK (1/2" x 1/4" x 4" LONG)	EPDM	–
11	AS REQD.	3004A	ALUMINUM REINFORCEMENT	ALUM. 6063-T6	TRULITE

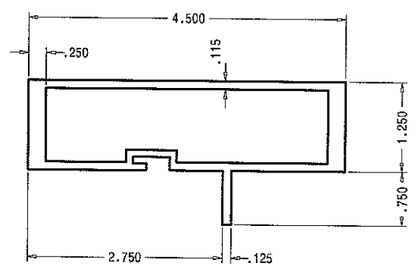

(1) FRAME HEAD/SILL/JAMB

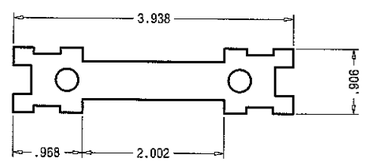

(4) SHEAR BLOCK

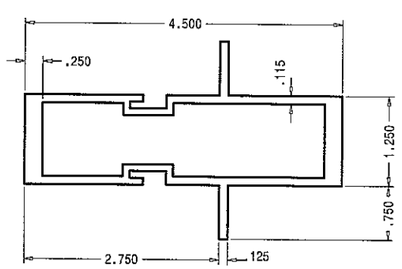

(2) FRAME INTERMEDIATE MULLION

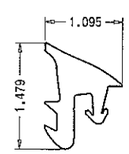

(5) WEDGE-IN GASKET

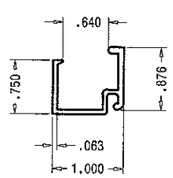

(3) GLAZING STOP (9/16" GLASS)

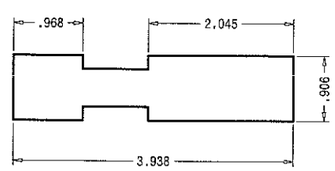

(11) REINFORCEMENT

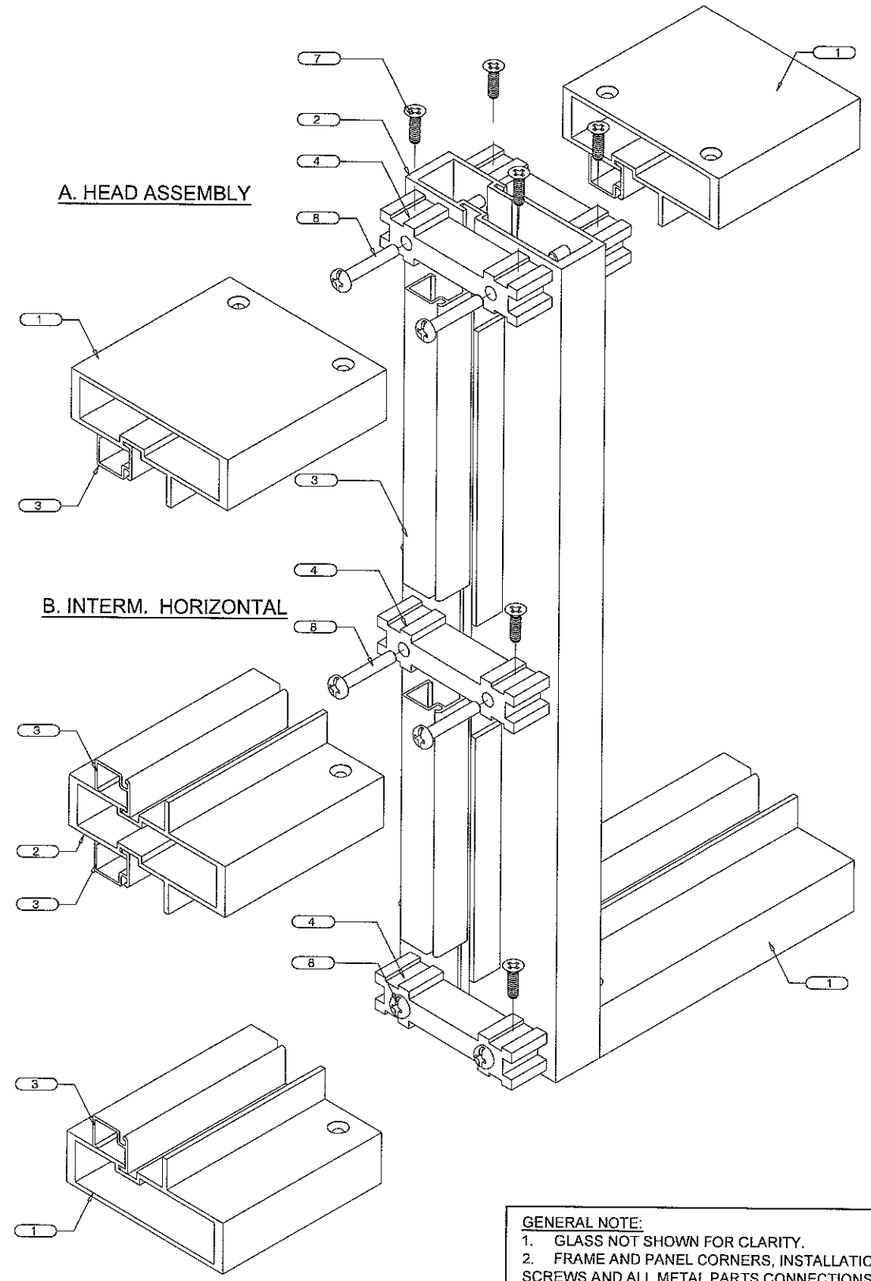

GENERAL NOTE:
1. GLASS NOT SHOWN FOR CLARITY.
2. FRAME AND PANEL CORNERS, INSTALLATION SCREWS AND ALL METAL PARTS CONNECTIONS TO BE SEALED WITH CLEAR COLORED SEALANT.

Trulite
GLASS & ALUMINUM SOLUTIONS™
http://www.trulite.com
800 FAIRWAY DRIVE, Suite 200
DEERFIELD BEACH, FL 33441
p. 800-432-8132 | f. 954-724-2083

PRODUCT:

Resistor
3000 ALUMINUM
STOREFRONT WALL-LMI

Resistor
PRODUCT SERIES

REVN	DATE/REMARKS
Rev.1	7/16/15 PER TDI COMMENTS

ENGINEER:
MCY ENGINEERING, INC.
GLAZING CONSULTANT
8501 SW 124TH AVE. STE. 205A
MIAMI, FL 33183
P: (305) 271-0117
Email: MCY.Engineering@att.net
www.MCYEngineering.com

STAMP:

JOO PIN PANG, P.E.
TEXAS REGISTRATION
P.E. #90246
STATE OF TEXAS
JOO PIN PANG
90246
LICENSED
PROFESSIONAL ENGINEER
07/21/15

PRODUCT CONTROL APPROVAL:

DRAWN: T.G.	DRAWING No:
DATE: 4-29-14	11 OF 11
DWG: TAD14-01	