IMPACT-RESISTANT

GENERAL NOTES :

1) THE ANCHORAGE METHODS SHOWN HAVE BEEN DESIGNED TO COMPLY WITH THE 2006 INTERNATIONAL BUILDING CODE FOR THE DESIGN PRESSURES LISTED.

2) WOOD BUCKS DEPICTED AS 1X ARE LESS THAN 1-1/2" THICK. 1X WOOD BUCKS ARE OPTIONAL IF UNIT IS INSTALLED DIRECTLY TO SOLID CONCRETE. WOOD BUCKS DEPICTED AS 2X ARE 1-1/2" THICK OR GREATER. ATTACHMENT METHOD OF WOOD BUCKS SHALL BE DONE BY OTHERS.

3) SEE TABLE FOR MINIMUM EDGE DISTANCE FROM CENTER OF ANCHOR TO SUBSTRATE EDGE (EXCLUDING FINISH OR STUCCO).

4) SHIM EACH ANCHOR LOCATION WHERE THE PRODUCT IS NOT FLUSH TO THE SUBSTRATE, USING SHIMS CAPABLE OF TRANSFERRING APPLIED LOADS.

5) ANCHORS SHALL BE COATED OR CORROSION RESISTANT AS SPECIFIED IN THE 2006 TEXAS REVISIONS TO THE 2006 INTERNATIONAL BUILDING CODE.

6) ADHESIVE SEALANT SHALL BE USED BETWEEN SUBSTRATE AND FLANGE OR FIN. OVERALL SEALING/FLASHING STRATEGY FOR WATER RESISTANCE OF INSTALLATION SHALL BE DONE BY OTHERS.

7) MATERIALS USED FOR ANCHOR EVALUATIONS WERE SOUTHERN PINE, 2.7 KSI CONCRETE AND CONCRETE MASONRY UNITS COMPLYING WITH ASTM C-90. GLAZING COMPLIES WITH ASTM E1300-09.

8) THE 1/3 STRESS INCREASE WAS NOT USED IN THIS ANCHOR EVALUATION. THE 1.6 LOAD DURATION FACTOR WAS USED FOR THE EVALUATION OF WOOD SCREWS.

9) IF THE EXACT PRODUCT SIZE IS NOT LISTED IN THE TABLES, ALWAYS ROUND UP TO THE NEXT LARGER VALUE.

ANCHOR LOCATIONS & SPACING

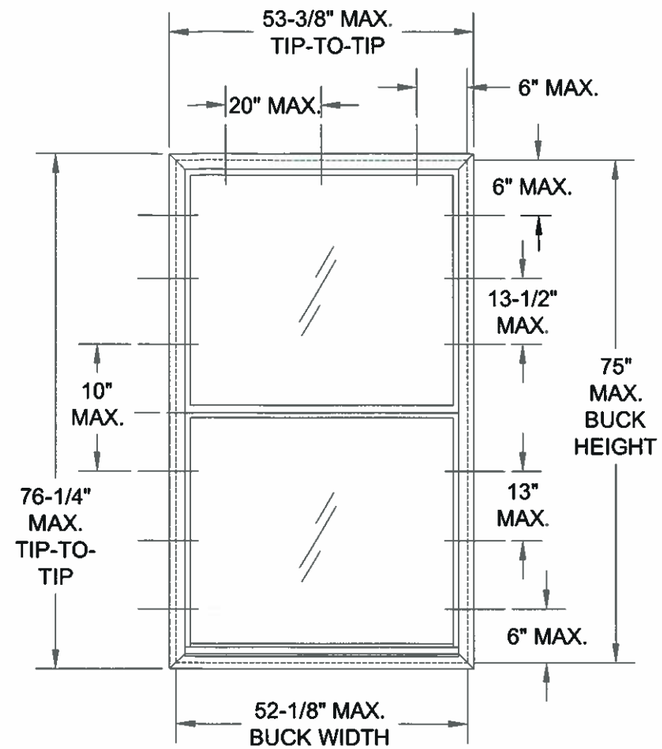

FLANGE & EQUAL LEG FRAME

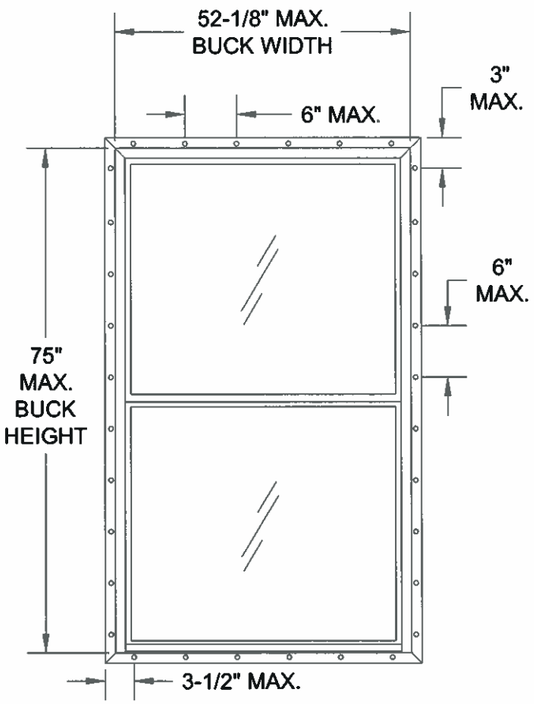

FIN FRAME

TABLE 1: FLANGE WINDOWS

Anchor Type	Substrate	Min. Edge Dist.	Min. Embedment
#10 Steel SMS	Wood (Southern Pine)	7/16"	1-3/8"
	Steel Stud Gr 33*	3/8"	.045 (18 GA)
	Aluminum-6063-T5*	3/8"	1/8"
	Steel, A36*	3/8"	1/8"
3/16" Masonry Anchor	Concrete	1"	1"
	Hollow CMU	1"	1-1/4"

* MINIMUM OF 3 THREADS BEYOND SUBSTRATE.

TABLE 2: FIN WINDOWS

Anchor Type	Substrate	Min. Edge Dist.	Min. Embedment
1-1/2" x .135" Roofing Nail, 2-1/2" x .113" Box Nail or 2-1/2" x .131" Common Nail	Wood (Southern Pine)	3/8"	1-7/16"
#10 x 1-1/2" Panhead SMS	Wood (Southern Pine)	9/16"	1-7/16"
	Steel Stud Gr 33*	3/8"	.045 (18 GA)
	Aluminum-6063-T5*	3/8"	1/8"
	Steel, A36*	3/8"	1/8"
#8 x 1-1/2" Trusshead Screw (or any head type with a minimum diameter of 0.364")	Wood (Southern Pine)	7/16"	1-7/16"
	Steel Stud Gr 33*	3/8"	.045 (18 GA)
	Aluminum-6063-T5*	3/8"	1/8"
	Steel, A36*	3/8"	1/8"

* MINIMUM OF 3 THREADS BEYOND SUBSTRATE.

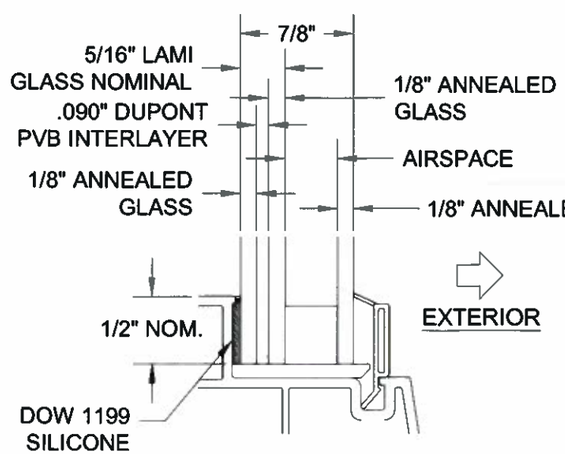

TABLE 3: FIN & FLANGE WINDOWS

Buck Size		Design Pressure		Certification Numbers	Test Reports
Width	Height	(+) psf	(-) psf		
52-1/8"	75"	50	50	190-272, 799	FTL-6821, 6822, 6823

STATE OF TEXAS
ANTHONY LYNN MILLER
106954
LICENSED
PROFESSIONAL ENGINEER
9/6/13

PGT®
1070 TECHNOLOGY DRIVE
NOKOMIS, FL 34275

A. Lynn Miller, P.E.
P.E. #106954

Drawn By:	Date:	Material:
J. ROSOWSKI	9/06/13	RIGID VINYL

Revised By: | Date: | Revisions:

Description:

Title: DOUBLE HUNG INSTALLATION

Series/Model:	Scale:	Sheet:	Drawing No.	Rev:
DH-560	NTS	1 of 4	TDI-DH560.1	

THE INFORMATION, DESIGN OR DATA CONTAINED HEREIN IS THE EXCLUSIVE PROPERTY OF PGT INDUSTRIES AND CONSIDERED CONFIDENTIAL AND PROPRIETARY. NO PORTION OF THIS DOCUMENT MAY BE USED OR REPRODUCED IN ANY FORM WITHOUT THE EXPRESSED WRITTEN PERMISSION OF PGT INDUSTRIES.

INSTALLATION WITH FLANGE FRAME
(FIN REMOVED)

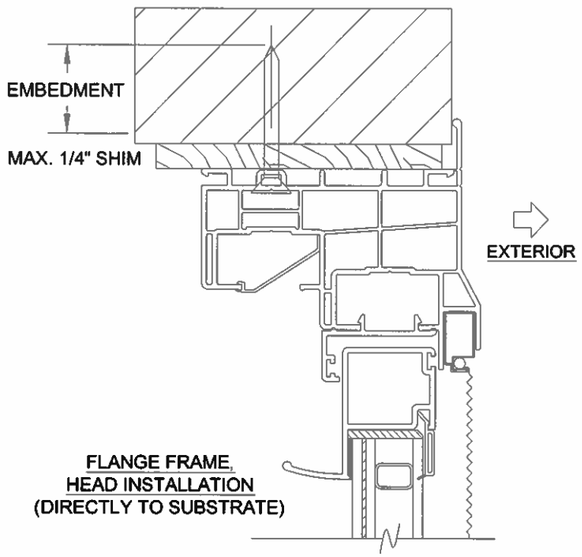

FLANGE FRAME,
HEAD INSTALLATION
(DIRECTLY TO SUBSTRATE)

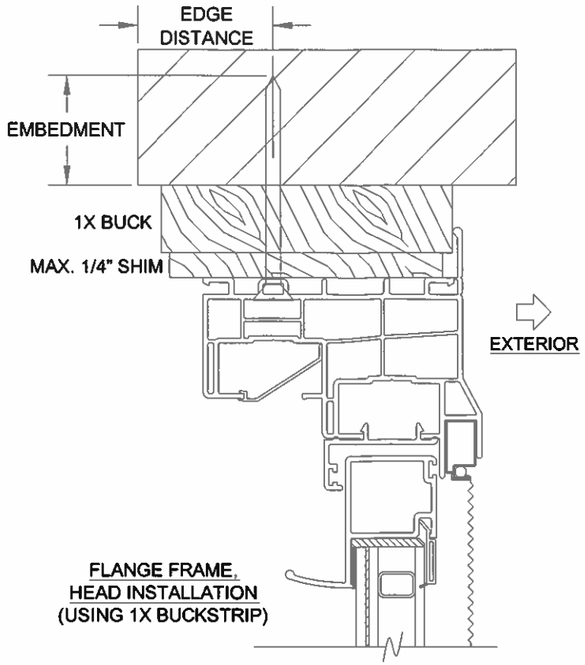

FLANGE FRAME,
HEAD INSTALLATION
(USING 1X BUCKSTRIP)

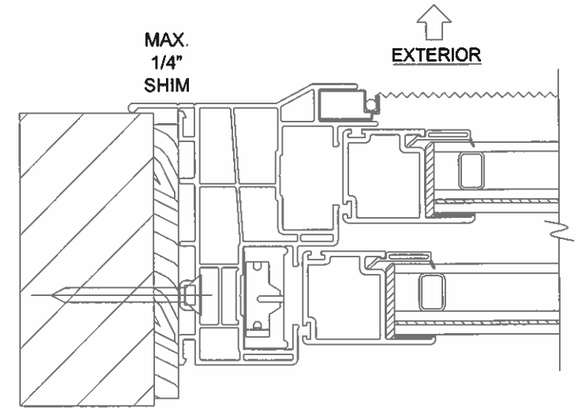

FLANGE FRAME,
JAMB INSTALLATION
(DIRECTLY TO SUBSTRATE)

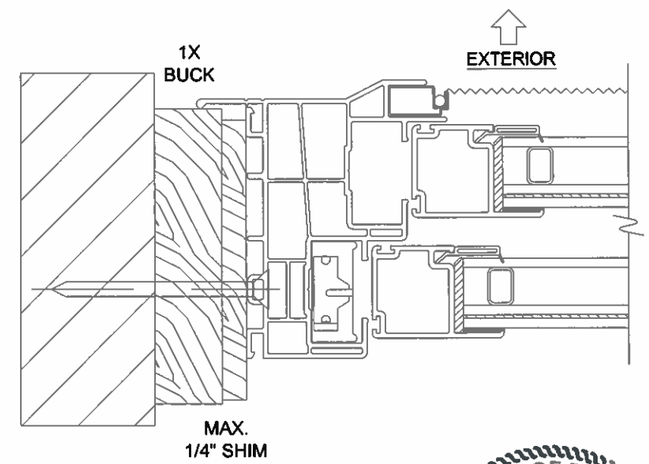

FLANGE FRAME,
JAMB INSTALLATION
(USING 1X BUCKSTRIP)

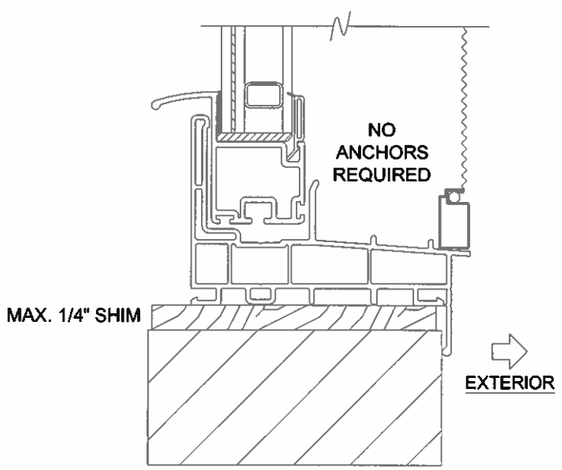

FLANGE FRAME,
SILL INSTALLATION
(DIRECTLY TO SUBSTRATE)

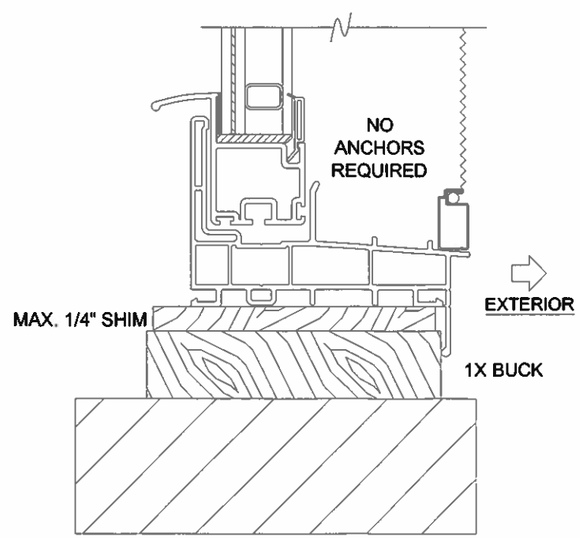

FLANGE FRAME,
SILL INSTALLATION
(USING 1X BUCKSTRIP)

STATE OF TEXAS
ANTHONY LYNN MILLER
106954
LICENSED
PROFESSIONAL ENGINEER
9/6/13

INSTALLATION NOTES:

1) SEE SHEET 1 FOR ANCHORAGE, SUBSTRATE AND SPACING REQUIREMENTS.
2) ANCHORS HEAD TYPE MAY DIFFER FROM SHOWN.

PGT®

1070 TECHNOLOGY DRIVE
NOKOMIS, FL 34275

A. Lynn Miller, P.E.
P.E. #106954

Drawn By:	Date:	Material:
J. ROSOWSKI	9/06/13	RIGID VINYL
Revsd By:	Date:	Revisions:

THE INFORMATION, DESIGN OR DATA CONTAINED HEREIN IS THE EXCLUSIVE PROPERTY OF PGT INDUSTRIES AND CONSIDERED CONFIDENTIAL AND PROPRIETARY. NO PORTION OF THIS DOCUMENT MAY BE USED OR REPRODUCED IN ANY FORM WITHOUT THE EXPRESSED WRITTEN PERMISSION OF PGT INDUSTRIES.

Description:

Title: DOUBLE HUNG INSTALLATION

Series/Model:	Scale:	Sheet:	Drawing No.	Rev:
DH-560	NTS	2 of 4	TDI-DH560.1	

INSTALLATION WITH EQUAL LEG FRAME
(FIN AND FLANGE REMOVED)

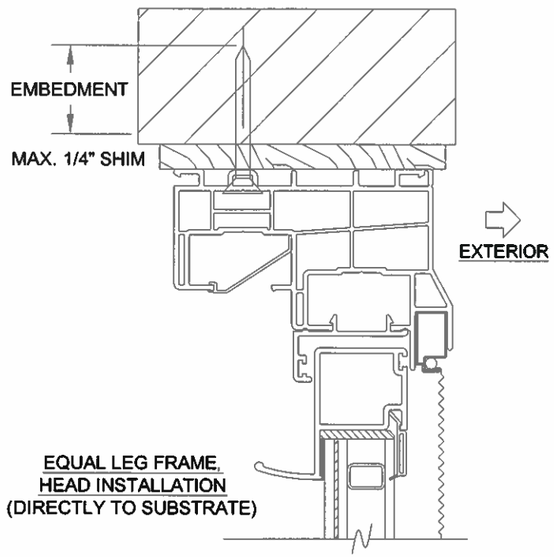

EQUAL LEG FRAME,
HEAD INSTALLATION
(DIRECTLY TO SUBSTRATE)

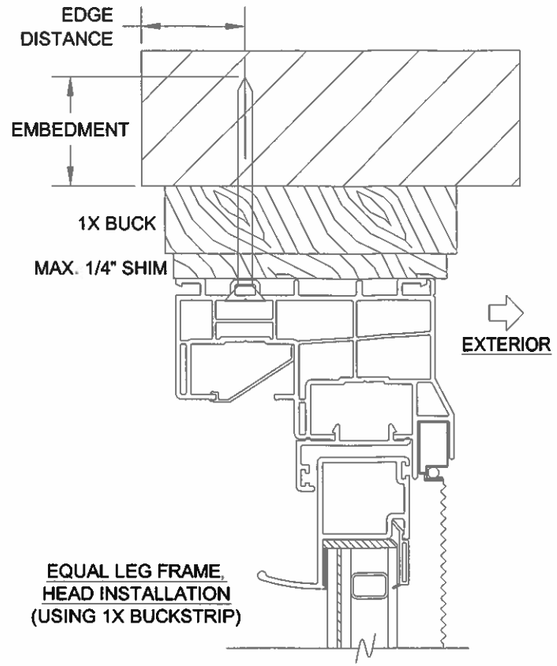

EQUAL LEG FRAME,
HEAD INSTALLATION
(USING 1X BUCKSTRIP)

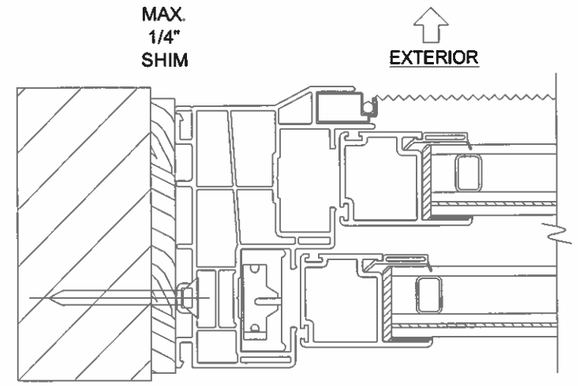

EQUAL LEG FRAME,
JAMB INSTALLATION
(DIRECTLY TO SUBSTRATE)

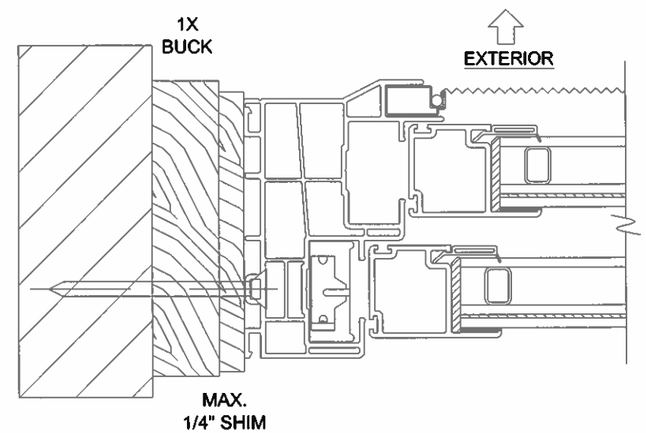

EQUAL LEG FRAME,
JAMB INSTALLATION
(USING 1X BUCKSTRIP)

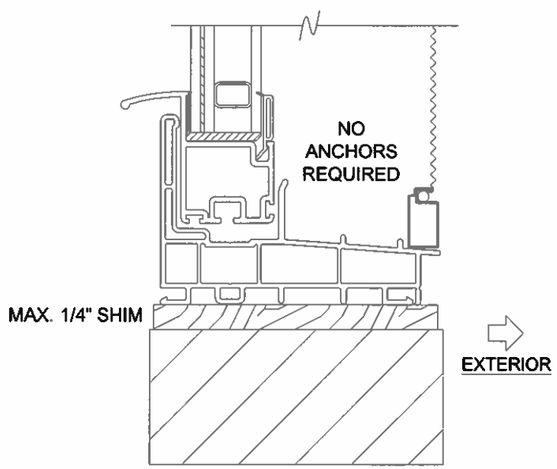

EQUAL LEG FRAME,
SILL INSTALLATION
(DIRECTLY TO SUBSTRATE)

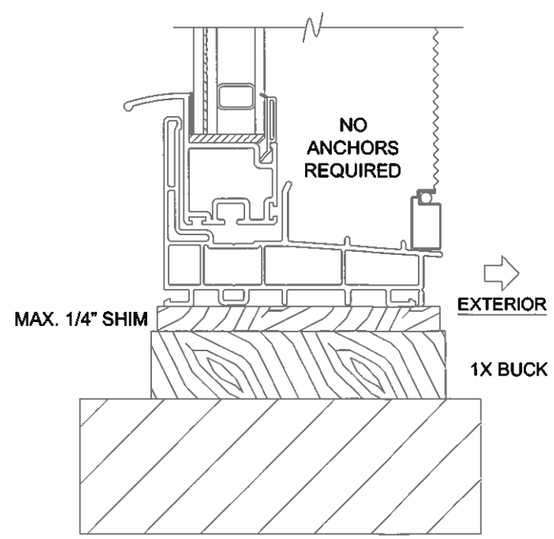

EQUAL LEG FRAME,
SILL INSTALLATION
(USING 1X BUCKSTRIP)

STATE OF TEXAS
ANTHONY LYNN MILLER
106954
LICENSED
PROFESSIONAL ENGINEER
9/6/13

INSTALLATION NOTES:

1) SEE SHEET 1 FOR ANCHORAGE, SUBSTRATE AND SPACING REQUIREMENTS.
2) ANCHORS HEAD TYPE MAY DIFFER FROM SHOWN.

PGT®
1070 TECHNOLOGY DRIVE
NOKOMIS, FL 34275

A. Lynn Miller, P.E.
P.E. #106954

Drawn By:	Date:	Material:
J. ROSOWSKI	9/06/13	RIGID VINYL
Revad By:	Date:	Revisions:

THE INFORMATION, DESIGN OR DATA CONTAINED HEREIN IS THE EXCLUSIVE PROPERTY OF PGT INDUSTRIES AND CONSIDERED CONFIDENTIAL AND PROPRIETARY. NO PORTION OF THIS DOCUMENT MAY BE USED OR REPRODUCED IN ANY FORM WITHOUT THE EXPRESSED WRITTEN PERMISSION OF PGT INDUSTRIES.

Description:

Title: DOUBLE HUNG INSTALLATION

Series/Model:	Scale:	Sheet:	Drawing No.	Rev:
DH-560	NTS	3 of 4	TDI-DH560.1	

INSTALLATION WITH FIN FRAME

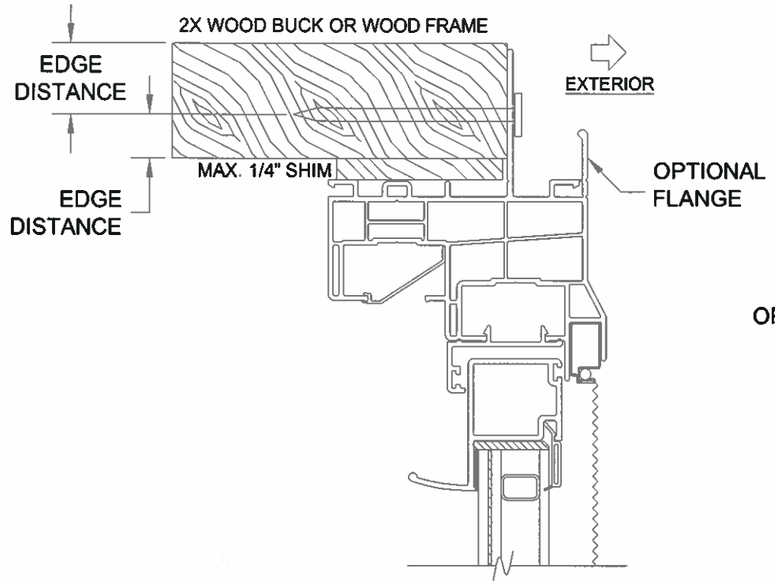

FIN FRAME, HEAD INSTALLATION

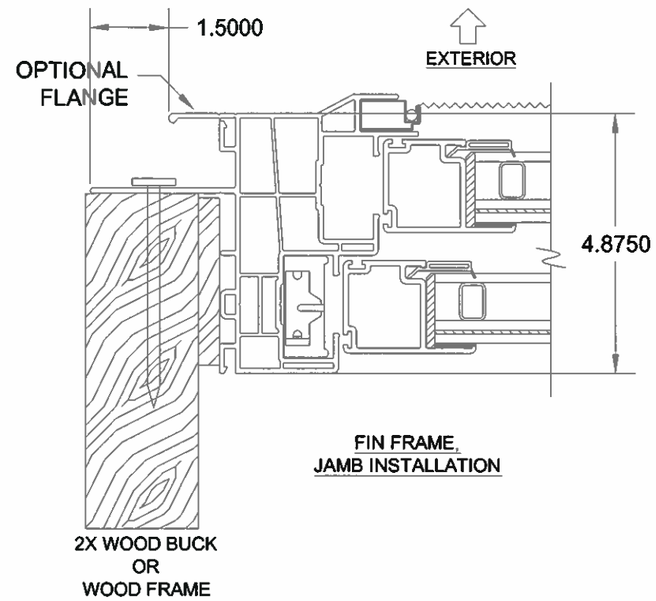

FIN FRAME, JAMB INSTALLATION

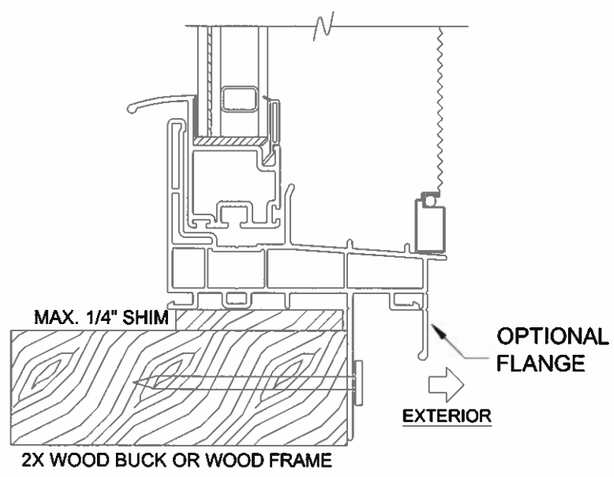

FIN FRAME, SILL INSTALLATION

STATE OF TEXAS
ANTHONY LYNN MILLER
106954
LICENSED
PROFESSIONAL ENGINEER
9/6/13

INSTALLATION NOTES:

1) SEE SHEET 1 FOR ANCHORAGE, SUBSTRATE AND SPACING REQUIREMENTS.

PGT®
1070 TECHNOLOGY DRIVE
NOKOMIS, FL 34275

A. Lynn Miller, P.E.
P.E. #106954

Drawn By:	Date:	Material:
J. ROSOWSKI	9/06/13	RIGID VINYL
Revsd By:	Date:	Revisions:

Description:

Title: DOUBLE HUNG INSTALLATION

Series/Model:	Scale:	Sheet:	Drawing No.	Rev:
DH-560	NTS	4 of 4	TDI-DH560.1	

THE INFORMATION, DESIGN OR DATA CONTAINED HEREIN IS THE EXCLUSIVE PROPERTY OF PGT INDUSTRIES AND CONSIDERED CONFIDENTIAL AND PROPRIETARY. NO PORTION OF THIS DOCUMENT MAY BE USED OR REPRODUCED IN ANY FORM WITHOUT THE EXPRESSED WRITTEN PERMISSION OF PGT INDUSTRIES.