TR3800 - FIXED WINDOW (NON-IMPACT)

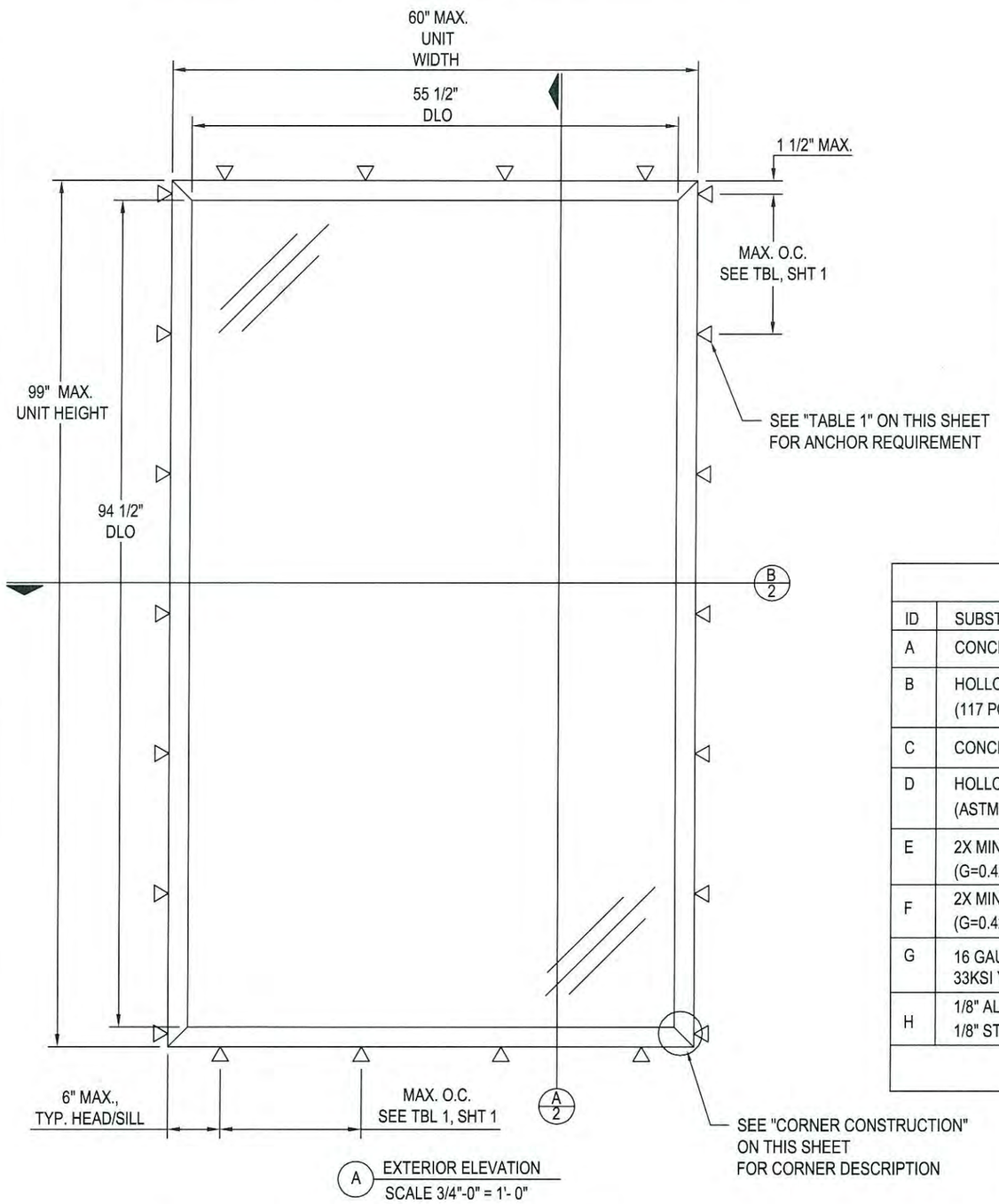

A EXTERIOR ELEVATION
SCALE 3/4"-0" = 1'- 0"

DESIGN PRESSURE = +100/- 100 PSF

GENERAL NOTES

1. THIS PRODUCT HAS BEEN TESTED TO AAMA/WDMA/CSA 101/I.S.2/A440-08, AND MEETS THE REQUIREMENTS OF THE 2006 INTERNATIONAL BUILDING CODE AND INTERNATIONAL RESIDENTIAL CODE, WITH 2006 TEXAS REVISIONS EFFECTIVE JANUARY 1, 2008.
2. THIS PRODUCT, FABRICATED, GLAZED, AND ANCHORED AS DETAILED IN THIS DRAWING, IS NON-IMPACT AND REQUIRES THE USE OF SHUTTERS IN WINDBORNE DEBRIS REGIONS.
3. ALLOWABLE CONFIGURATION: O (SINGLE FIXED LITE)
4. THE DESIGN PRESSURE RATINGS IN THIS DRAWING ARE AS LIMITED BY ASTM E-1300-04 GLASS TABLES, AND TESTED PRESSURES.
5. DISSIMILAR MATERIALS THAT COME INTO CONTACT, INCLUDING BUT NOT LIMITED TO PRESSURE TREATED WOOD BUCKS, SHALL BE COATED OR OTHERWISE PROTECTED PER IBC/IRC REQUIREMENTS TO PREVENT GALVANIC REACTIONS.
6. SEALING AND FLASHING STRATEGIES FOR OVERALL WATER INFILTRATION RESISTANCE SHALL BE THE RESPONSIBILITY OF OTHERS.
7. THE 4/3 ALLOWABLE STRESS INCREASE HAS NOT BEEN USED IN THE ANCHOR ANALYSIS FOR THIS SYSTEM. THE 1.6 Cd FACTOR WAS USED IN THE ANALYSIS OF WOOD SUBSTRATE.
8. STRUCTURAL INTEGRITY OF SUBSTRATE MATERIALS TO RECEIVE THE LOADS FROM THIS PRODUCT, AND INSTALLATION OF WOOD BUCKS TO THE SUBSTRATE, TO BE ENGINEERED BY OTHERS OR AS APPROVED BY THE AUTHORITY HAVING JURISDICTION.
9. THIS PRODUCT SHALL BE INSTALLED USING ONE OF THE APPROVED FASTENERS IN TABLE 1 APPROPRIATE FOR THE SUBSTRATE TYPE, AT THE MINIMUM SPACING SHOWN IN THE ELEVATION VIEW ON THIS PAGE.
10. MINIMUM ANCHOR EMBEDMENTS LISTED IN TABLE 1 SHALL BE BEYOND WALL DRESSING OR STUCCO AND FULLY INTO SUBSTRATE.
11. SUBTRATES SHALL MEET THE MINIMUM STRENGTH REQUIREMENTS AS SHOWN IN TABLE 1. CONCRETE OR MASONRY SUBSTRATES SHALL NOT BE CRACKED. FOR INSTALLATION TO METAL SUBSTRATES, ANCHORS SHALL BE LONG ENOUGH TO BE FULLY THREADED THROUGH THE METAL THICKNESS WITH AN ADDITIONAL 3/16" MIN. OF THREADS BEYOND.

TABLE 1: INSTALLATION ANCHOR REQUIREMENTS TABLE

ID	SUBSTRATE TYPE	ANCHOR TYPE	MIN. EMBED	MIN. EDGE DIST.	MAX. O.C. DIST.
A	CONCRETE (2.0 KSI MIN)	1/4" ITW TAPCON	1 1/2"	1 1/2"	9 5/8"
B	HOLLOW OR GROUT-FILLED CMU (117 PCF MIN.)	1/4" ITW TAPCON	1"	2"	9 5/8"
C	CONCRETE (2.85 KSI MIN.)	1/4" ELCO ULTRACON	1 3/8"	1"	9 5/8"
D	HOLLOW OR GROUT-FILLED CMU (ASTM C90)	1/4" ELCO ULTRACON	1 1/4"	2-1/2"	9 5/8"
E	2X MIN. SPRUCE-PINE-FIR WOOD (G=0.42)	1/4" ELCO ULTRACON	1 3/8"	1"	7 7/8"
F	2X MIN. SPRUCE-PINE-FIR WOOD (G=0.42)	#12 WOOD SCREW	1 3/8"	1"	7 7/8"
G	16 GAUGE (0.060") MIN. STEEL STUD 33KSI YIELD MIN.	#12-24 ITW TEKS SELF-DRILLING SCREW	SEE NOTE 11	1/2"	7 7/8"
H	1/8" ALUM. 6063-T5 MIN. OR 1/8" STEEL 33 KSI MIN.	#12 GRADE 5 SELF-TAPPING/ DRILLING SCREW	SEE NOTE 11	1/2"	7 7/8"

INSTALL ONE ANCHOR PER LOCATION INDICATED IN ELEVATION VIEW

CORNER CONSTRUCTION:

FRAME: VERTICAL AND HORIZONTAL MEMBERS ARE MITERED AND JOINED TOGETHER WITH CORNER KEYS, CRIMPED AND SEALED WITH SEALANT.

REV.	DATE	DESCRIPTION	BY

E.C. NO. xxxxx-xx XX/XX/XX

5/15/2013

ROBERT L. CLARK, TX P.E. #74072
823 HARROWOOD CT
SARASOTA, FL PH. 941-504-0619

STATE OF TEXAS
ROBERT L. CLARK
74072
REGISTERED PROFESSIONAL ENGINEER

TRACO
A DIVISION OF KAWNEER
71 PROGRESS AVENUE
CRANBERRY TOWNSHIP, PA 16066
PHONE (724) 776-7000
FAX (724) 776-7114

TR-3800 - FIXED WINDOW
NON-IMPACT

SCALE: NONE

DRAWN BY YSE

DATE 06/12/12

DRWG. NO. I-NI3800-001

SHEET 1 OF 03

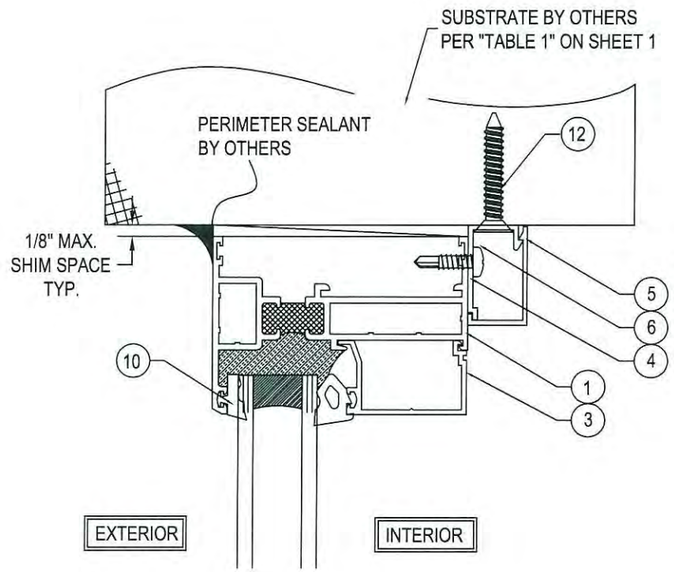

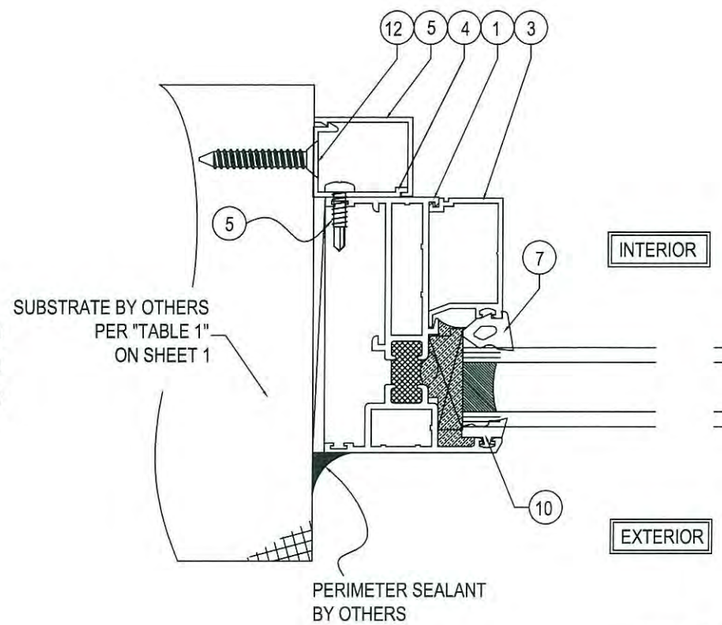

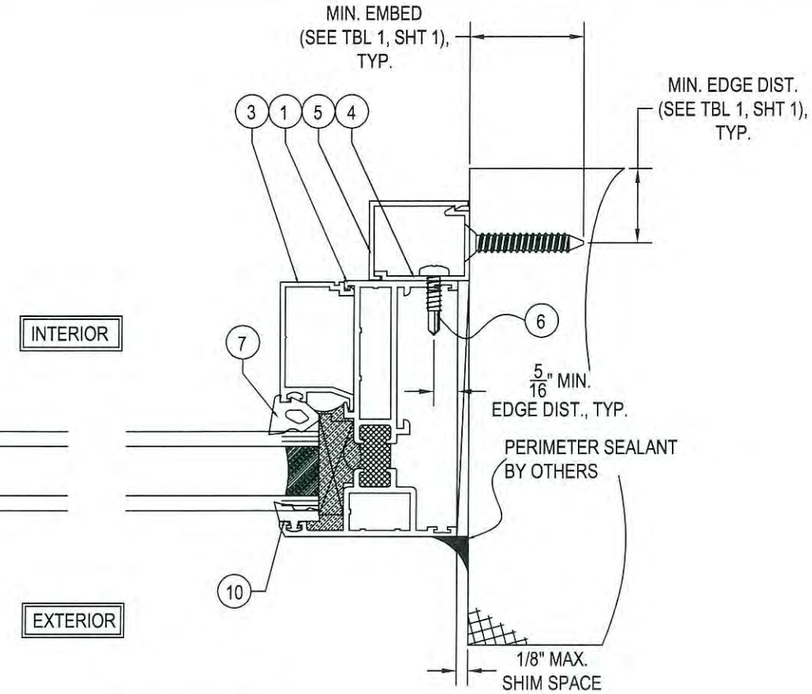

B HORIZONTAL SECTION
SCALE 6"-0" = 1'- 0"

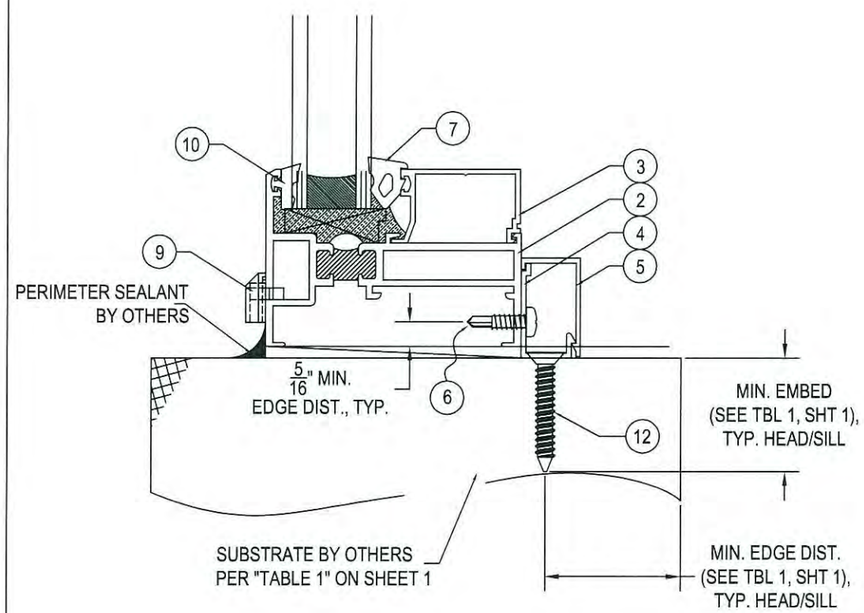

A VERITICAL SECTION
SCALE 6"-0" = 1'- 0"

SEE GLAZING NOTE

GLAZING NOTE:

UNITS MUST BE GLAZED WITH 1" INSULATED GLASS UNIT CONSISTING OF:
3/16" CLEAR TEMPERED LITE (EXTERIOR), 5/8" TPS THERMOPLASTIC SPACER,
AND 3/16" CLEAR TEMPERED LITE (INTERIOR)

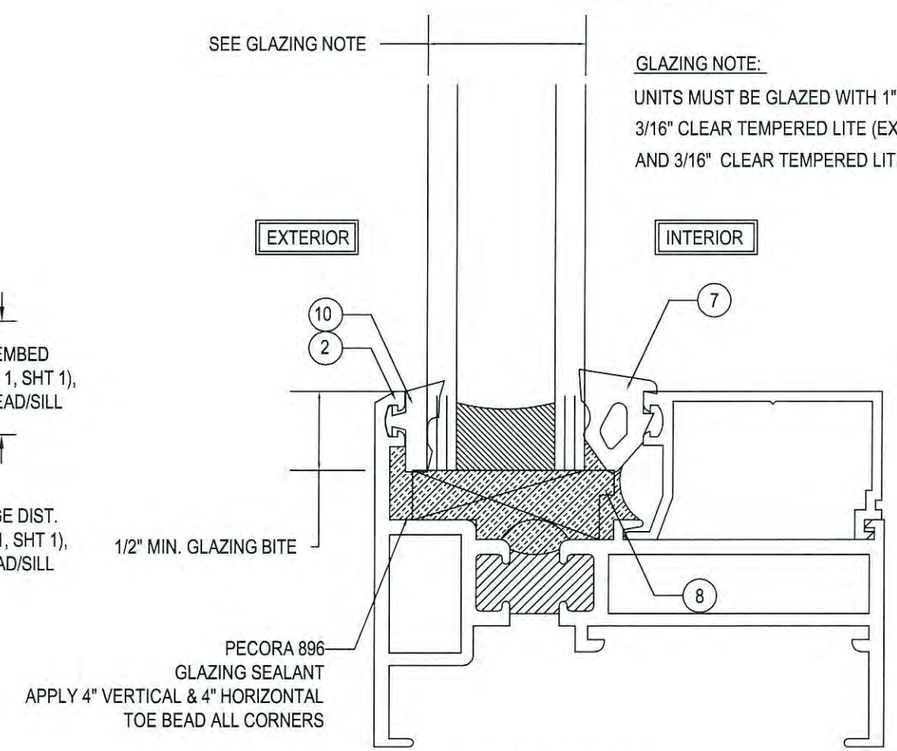

C GLAZING DETAIL
SCALE 1"-0" = 1'- 0"

REV.	DATE	DESCRIPTION	BY

E.C. NO. xxxxx-xx XX/XX/XX

5/15/2013

ROBERT L. CLARK, TX P.E. #74072
823 HARROWOOD CT
SARASOTA, FL PH. 941-504-0619

STATE OF TEXAS
ROBERT L. CLARK
REGISTERED
PROFESSIONAL ENGINEER

TRACO
A DIVISION OF KAWNEER
71 PROGRESS AVENUE
CRANBERRY TOWNSHIP, PA 16066
PHONE (724) 776-7000
FAX (724) 776-7114

TR-3800 - FIXED WINDOW
NON-IMPACT

SCALE: NONE

DRAWN BY: YSE

DATE: 06/12/12

DRWG. NO.: I-NI3800-002

SHEET: 2 OF 03

MATERIAL PARTS LIST

ITEM#	PART #	DESCRIPTION	MATERIAL
		EXTRUSIONS	
1	H-377	HEAD-JAMB VENT	6063-T6 ALUMINUM
2	H-392	PROJECT OUT SILL W/O LEG	6063-T6 ALUMINUM
3	S-382	FRAME 1" GLAZING BEAD	6063-T6 ALUMINUM
4	S-018	#5 CLIP	6063-T6 ALUMINUM
5	S-017	#5 TRIM	6063-T6 ALUMINUM
		GASKET & MISC. PARTS	
6	15-0073	#10-16 X 3/4" PPH "TEK" 410 SS	410 STAINLESS STEEL
7	20-4048	INTERIOR GLAZING WEDGE	EPDM
8	20-6016	1" GL SETTING BLOCK	EPDM
9	30-0907	WEEP HOLE COVER	MOULDED PLASTIC
10	20-4006	EXTERIOR GLAZING	NEOPRENE
11	-	ANCHOR (PER TABLE 1 ON SHEET 1)	SEE TABLE 1

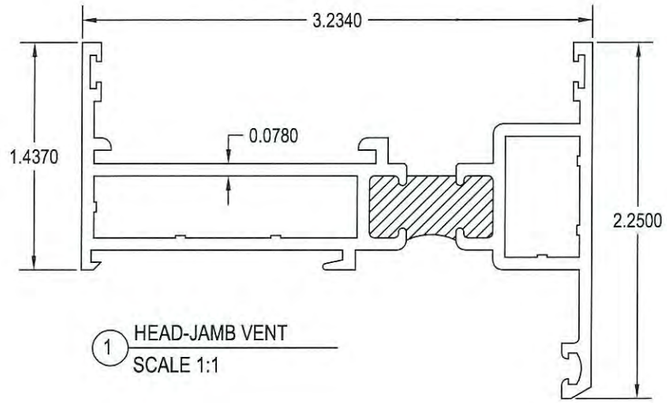

1 HEAD-JAMB VENT
SCALE 1:1

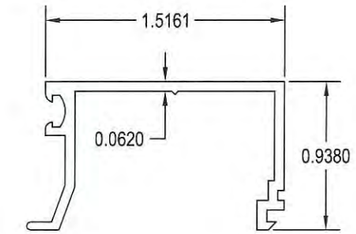

3 1" GLAZING BEAD
SCALE 1:1

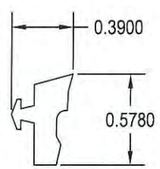

10 EXTERIOR GLAZING
SCALE 1:1

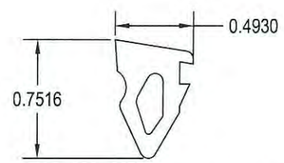

7 INTERIOR GLAZING WEDGE
SCALE 1:1

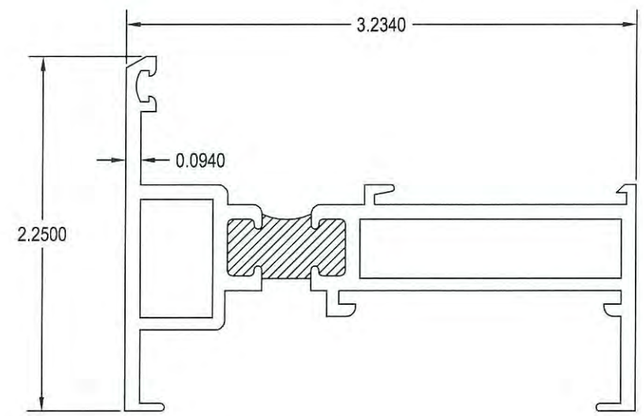

2 PROJECT OUT SILL W/O LEG
SCALE 1:1

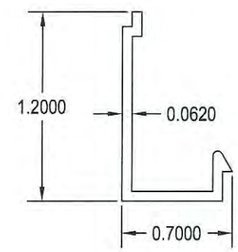

4 #5 CLIP
SCALE 1:1

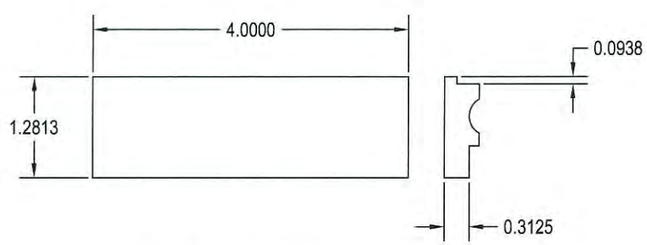

8 1" GL SETTING BLOCK
SCALE 1:2

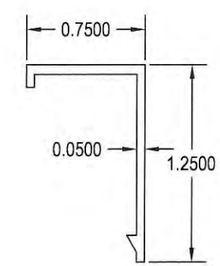

5 #5 TRIM
SCALE 1:1

REV.	DATE	DESCRIPTION	BY

E.C. NO. xxxxx-xx XX/XX/XX

5/15/2013

ROBERT L. CLARK, TX P.E. #74072
823 HARROWOOD CT
SARASOTA, FL PH. 941-504-0619

STATE OF TEXAS
ROBERT L. CLARK
74072
REGISTERED
PROFESSIONAL ENGINEER

TRACO
A DIVISION OF KAWNEER
71 PROGRESS AVENUE
CRANBERRY TOWNSHIP, PA 16066
PHONE (724) 776-7000
FAX (724) 776-7114

TR-3800 - FIXED WINDOW
NON-IMPACT

SCALE: NONE

DRAWN BY YSE

DATE 06/13/12

DRWG. NO. I-NI3800-003

SHEET 3 OF 03