GENERAL NOTES :

1) THE ANCHORAGE METHODS SHOWN HAVE BEEN DESIGNED TO COMPLY WITH THE 2006 INTERNATIONAL BUILDING CODE FOR THE DESIGN PRESSURES LISTED.

2) WOOD BUCKS DEPICTED AS 1X ARE LESS THAN 1-1/2" THICK. 1X WOOD BUCKS ARE OPTIONAL IF UNIT IS INSTALLED DIRECTLY TO SOLID CONCRETE. WOOD BUCKS DEPICTED AS 2X ARE 1-1/2" THICK OR GREATER. ATTACHMENT METHOD OF WOOD BUCKS SHALL BE DONE BY OTHERS.

3) SEE TABLES FOR MINIMUM EDGE DISTANCE FROM CENTER OF ANCHOR TO SUBSTRATE EDGE (EXCLUDING FINISH OR STUCCO).

4) SHIM EACH ANCHOR LOCATION WHERE THE PRODUCT IS NOT FLUSH TO THE SUBSTRATE, USING SHIMS CAPABLE OF TRANSFERRING APPLIED LOADS.

5) ANCHORS SHALL BE COATED OR CORROSION RESISTANT AS APPROPRIATE FOR SUBSTRATE MATERIAL. DISSIMILAR MATERIALS SHALL BE PROTECTED AS REQUIRED TO PREVENT REACTIONS. ALUMINUM SHALL BE PROTECTED FROM DISSIMILAR MATERIALS AS SPECIFIED IN THE 2006 TEXAS REVISIONS TO THE 2006 INTERNATIONAL BUILDING CODE.

6) ADHESIVE SEALANT SHALL BE USED BETWEEN SUBSTRATE AND FLANGE OR FIN. OVERALL SEALING/FLASHING STRATEGY FOR WATER RESISTANCE OF INSTALLATION SHALL BE DONE BY OTHERS.

7) MATERIALS USED FOR ANCHOR EVALUATIONS WERE SOUTHERN PINE, 2.7 KSI CONCRETE AND CONCRETE MASONRY UNITS COMPLYING WITH ASTM C-90. GLAZING COMPLIES WITH ASTM E1300-09.

8) THE 1/3 STRESS INCREASE WAS NOT USED IN THIS ANCHOR EVALUATION. THE 1.6 LOAD DURATION FACTOR WAS USED FOR THE EVALUATION OF WOOD SCREWS.

ANCHOR LOCATIONS & SPACING

IMPACT RESISTANT

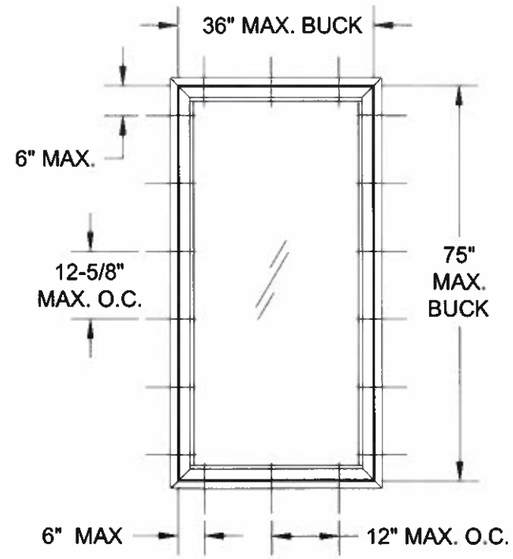

FLANGE FRAME

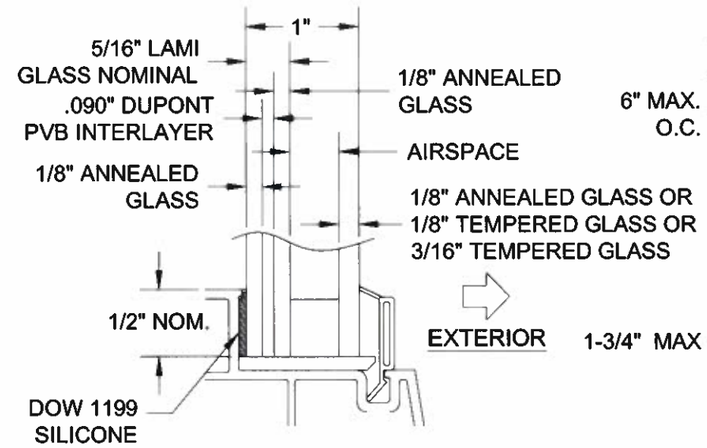

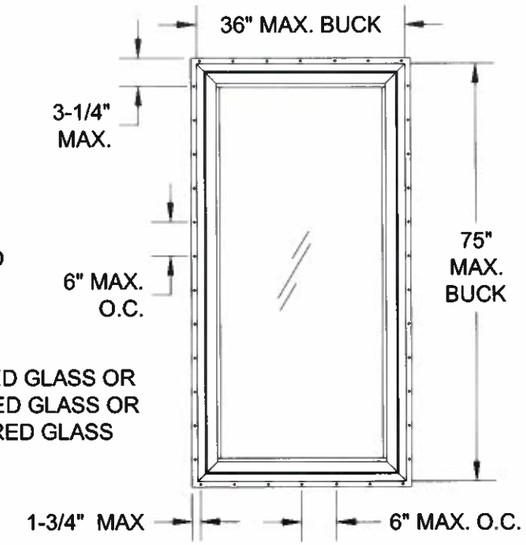

INTEGRAL FIN FRAME

TABLE 2: ANCHORS FOR INSTALLATION THROUGH THE FRAME

Anchor	Substrate	Min. Edge Distance	Min. Embedment
#10 Sheet Metal Screw, G5 Steel or 410 Stainless Steel	P.T. Southern Pine (SG = .55)	1/2"	1-3/8"
	Aluminum, 6063-T5 min.	3/8"	1/8"
	Steel Stud, Gr. 33 min.	3/8"	0.0451 (18 ga)
	A36 Steel	3/8"	1/8"
3/16" Steel Ultracon	P.T. Southern Pine (SG = .55)	1/2"	1-3/8"
	Concrete (min. 2.7 ksi)	1"	1"
	Ungrouted CMU, (ASTM C-90)	1"	1-1/4"

NOTE: FOR ALL METAL SUBSTRATES, SCREW EMBEDMENT SHALL BE MIN. 3 THREADS BEYOND INSIDE FACE OF MATERIAL.

TABLE 3: ANCHORS FOR INSTALLATION THROUGH THE FIN

Anchor	Substrate	Min. Edge Distance	Min. Embedment
2-1/2" x .131" Common Nail	P.T. Southern Pine (SG = .55)	9/16"	2-7/16"
2-1/2" x .145" Roofing Nail	P.T. Southern Pine (SG = .55)	9/16"	2-7/16"
#10 Steel SMS	P.T. Southern Pine (SG = .55)	3/4"	1-3/8"
	Aluminum, 6063-T5 min.	3/8"	1/8"
	Steel Stud, Gr. 33 min.	3/8"	0.0451 (18 ga)
	A36 Steel	3/8"	1/8"

NOTE: FOR ALL METAL SUBSTRATES, SCREW EMBEDMENT SHALL BE MIN. 3 THREADS BEYOND INSIDE FACE OF MATERIAL.

TABLE 1: DESIGN PRESSURE

Window Buck Size		Design Pressure		Frame Type	Certification Numbers
Width	Height	(+) psf	(-) psf		
36"	75"	60	60	Flange, Equal-leg, Fin	190-270, 795, 796

STATE OF TEXAS
ANTHONY LYNN MILLER
106954
LICENSED
PROFESSIONAL ENGINEER
9/3/13

PGT®
1070 TECHNOLOGY DRIVE
NOKOMIS, FL 34275

A. Lynn Miller, P.E.
P.E. #106954

Drawn By:	Date:	Material:
J. ROSOWSKI	09/03/13	VINYL
Revsd By:	Date:	Revisions:

Description:

Title: FIXED CASEMENT WINDOW

Series/Model:	Scale:	Sheet:	Drawing No.	Rev:
CA-540 "O"	NTS	1 of 4	TDI-CA540F.1	

THE INFORMATION, DESIGN OR DATA CONTAINED HEREIN IS THE EXCLUSIVE PROPERTY OF PGT INDUSTRIES AND CONSIDERED CONFIDENTIAL AND PROPRIETARY. NO PORTION OF THIS DOCUMENT MAY BE USED OR REPRODUCED IN ANY FORM WITHOUT THE EXPRESSED WRITTEN PERMISSION OF PGT INDUSTRIES.

INSTALLATION WITH FLANGE FRAME

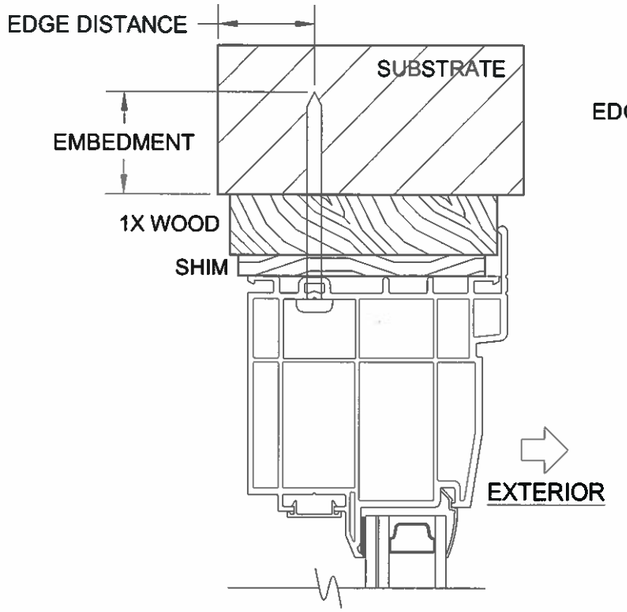

FLANGE FRAME,
HEAD INSTALLATION
(USING 1X BUCKSTRIP)

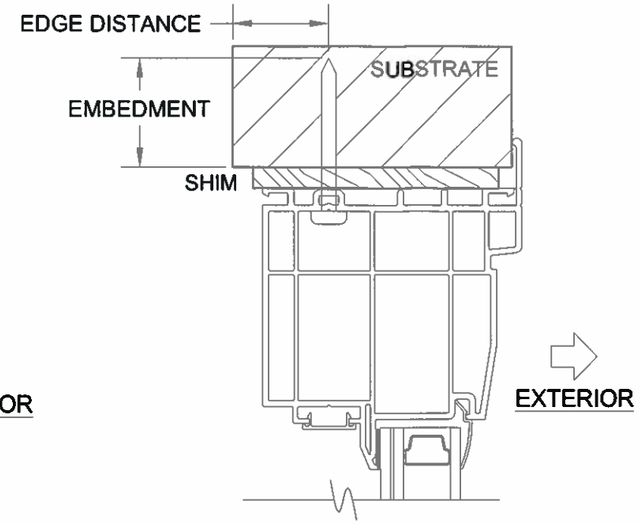

FLANGE FRAME,
HEAD INSTALLATION
(DIRECTLY TO SUBSTRATE)

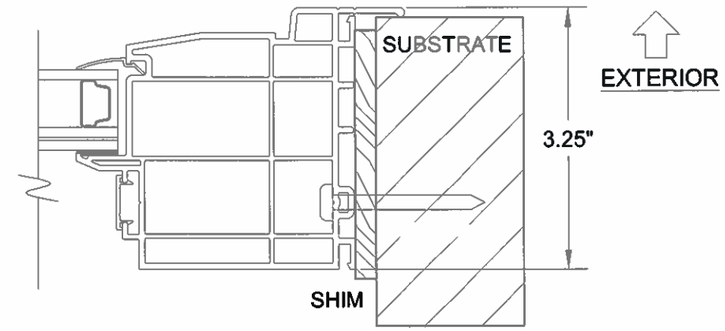

FLANGE FRAME,
JAMB INSTALLATION
(DIRECTLY TO SUBSTRATE)

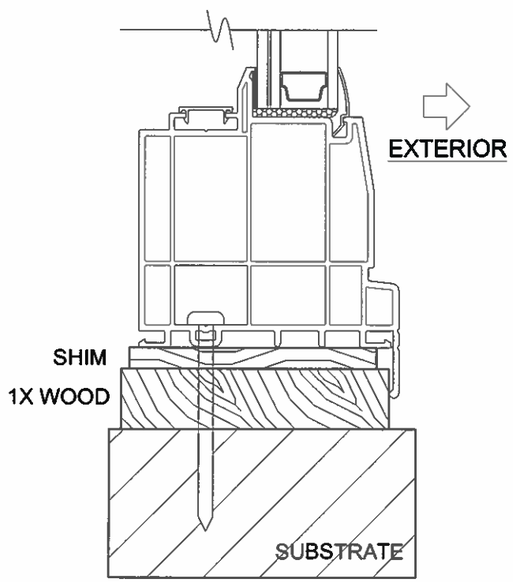

FLANGE FRAME,
SILL INSTALLATION
(USING 1X BUCKSTRIP)

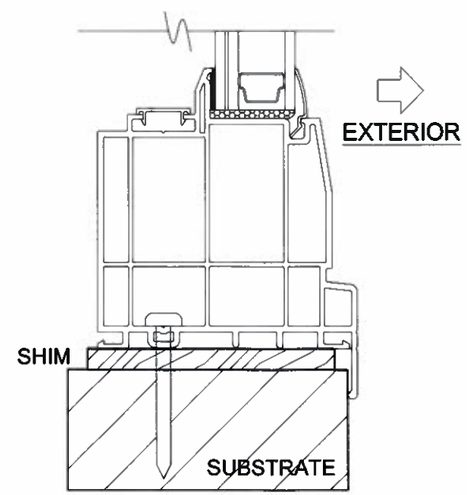

FLANGE FRAME,
SILL INSTALLATION
(DIRECTLY TO SUBSTRATE)

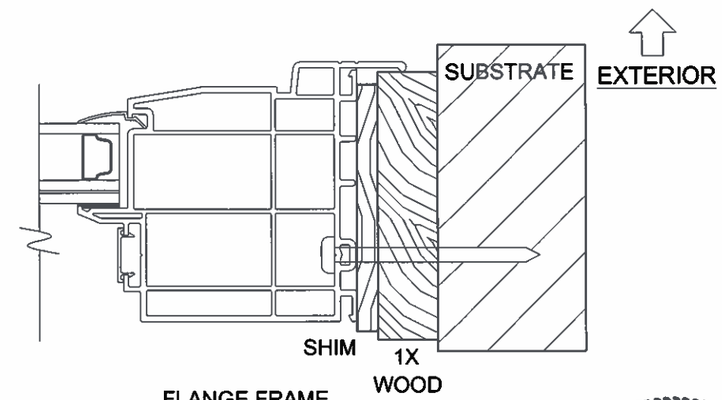

FLANGE FRAME,
JAMB INSTALLATION
(USING 1X BUCKSTRIP)

STATE OF TEXAS
ANTHONY LYNN MILLER
106954
LICENSED
PROFESSIONAL ENGINEER
9/3/13

INSTALLATION NOTES:

1) SEE SHEET 1 FOR SPACING REQUIREMENTS.
2) SEE TABLE(S) ON SHEET 1 FOR ANCHORAGE AND SUBSTRATE REQUIREMENTS.
3) MAX. SHIM THICKNESS TO BE 1/4".
4) GLASS SHOWN IS FOR ILLUSTRATIVE PURPOSES ONLY AND MAY DIFFER TO MEET DESIGN REQUIREMENTS.
5) FLANGE MAY BE REMOVED FOR EQUAL-LEG FRAME APPLICATIONS. USE FLANGE INSTRUCTIONS.

PGT®
1070 TECHNOLOGY DRIVE
NOKOMIS, FL 34275

A. Lynn Miller, P.E.
P.E. #106954

Drawn By:	Date:	Material:
J. ROSOWSKI	09/03/13	VINYL

Revsd By:	Date:	Revisions:

Description:

Title: FIXED CASEMENT WINDOW

Series/Model:	Scale:	Sheet:	Drawing No.	Rev:
CA-540 "O"	NTS	2 of 4	TDI-CA540F.1	

THE INFORMATION, DESIGN OR DATA CONTAINED HEREIN IS THE EXCLUSIVE PROPERTY OF PGT INDUSTRIES AND CONSIDERED CONFIDENTIAL AND PROPRIETARY. NO PORTION OF THIS DOCUMENT MAY BE USED OR REPRODUCED IN ANY FORM WITHOUT THE EXPRESSED WRITTEN PERMISSION OF PGT INDUSTRIES.

INSTALLATION WITH FIN FRAME

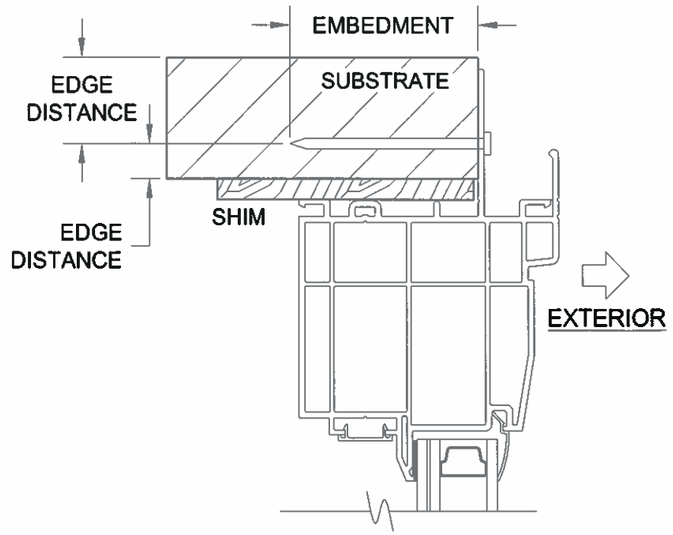

FIN FRAME,
HEAD INSTALLATION

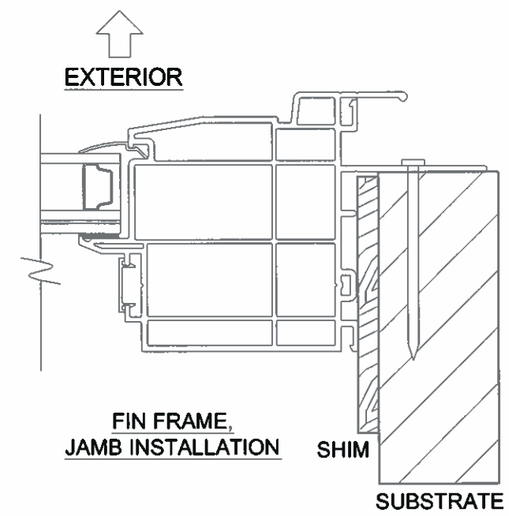

FIN FRAME,
JAMB INSTALLATION

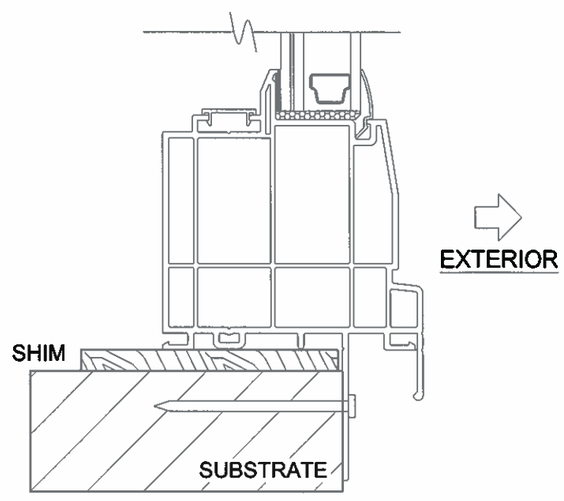

FIN FRAME,
SILL INSTALLATION

STATE OF TEXAS
ANTHONY LYNN MILLER
106954
LICENSED
PROFESSIONAL ENGINEER
9/3/13

INSTALLATION NOTES:

1) SEE SHEET 1 FOR SPACING REQUIREMENTS.
2) SEE TABLE(S) ON SHEET 1 FOR ANCHORAGE AND SUBSTRATE REQUIREMENTS.
3) MAX. SHIM THICKNESS TO BE 1/4".
4) GLASS SHOWN IS FOR ILLUSTRATIVE PURPOSES ONLY AND MAY DIFFER TO MEET DESIGN REQUIREMENTS.
5) FLANGE IS OPTIONAL AND MAY BE REMOVED.

PGT®
1070 TECHNOLOGY DRIVE
NOKOMIS, FL 34275

A. Lynn Miller, P.E.
P.E. #106954

Drawn By:	Date:	Material:
J. ROSOWSKI	09/03/13	VINYL
Revad By:	Date:	Revisions:

THE INFORMATION, DESIGN OR DATA CONTAINED HEREIN IS THE EXCLUSIVE PROPERTY OF PGT INDUSTRIES AND CONSIDERED CONFIDENTIAL AND PROPRIETARY. NO PORTION OF THIS DOCUMENT MAY BE USED OR REPRODUCED IN ANY FORM WITHOUT THE EXPRESSED WRITTEN PERMISSION OF PGT INDUSTRIES.

Description:

Title: FIXED CASEMENT WINDOW

Series/Model:	Scale:	Sheet:	Drawing No.	Rev:
CA-540 "O"	NTS	3 of 4	TDI-CA540F.1	

INSTALLATION ANCHORS THROUGH THE FRAME IN A FIN FRAME WINDOW

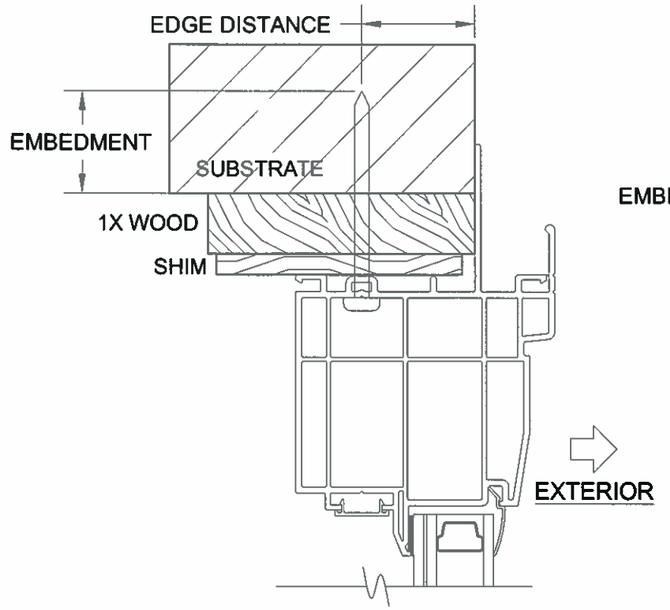

FIN FRAME,
HEAD INSTALLATION
(USING 1X BUCKSTRIP)

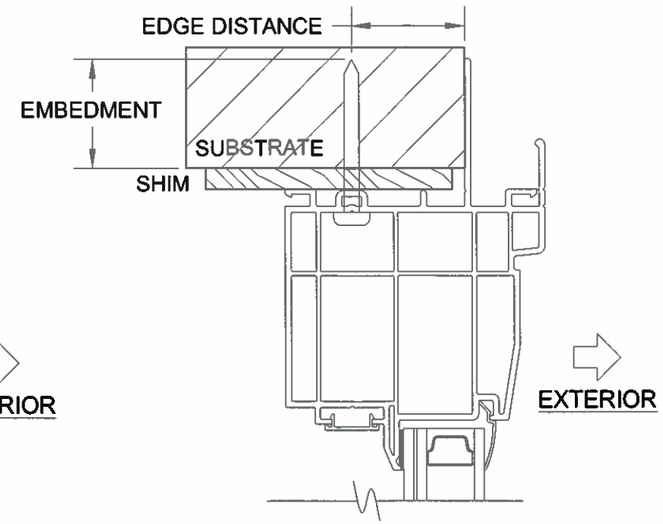

FIN FRAME,
HEAD INSTALLATION
(DIRECTLY TO SUBSTRATE)

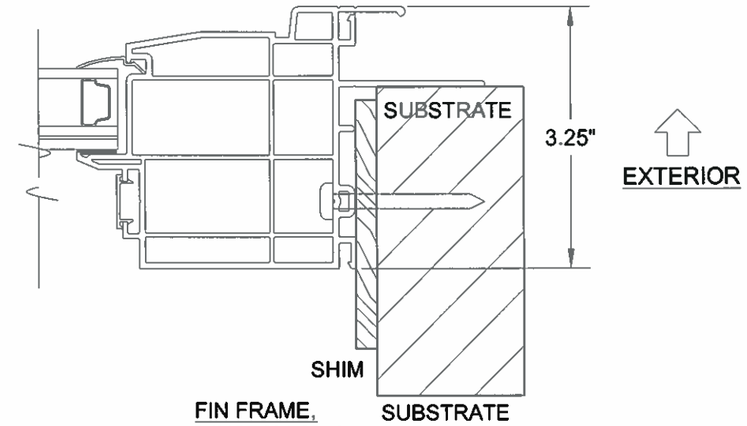

FIN FRAME,
JAMB INSTALLATION
(DIRECTLY TO SUBSTRATE)

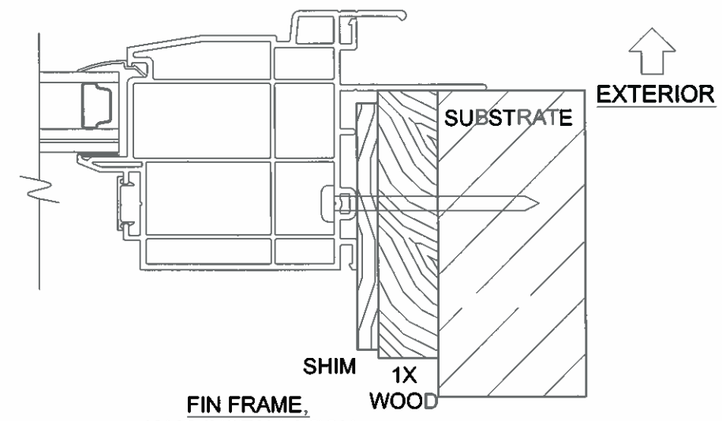

FIN FRAME,
JAMB INSTALLATION
(USING 1X BUCKSTRIP)

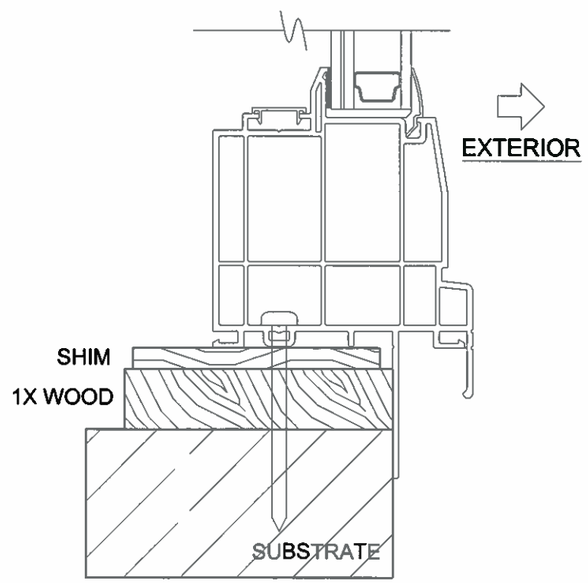

FIN FRAME,
SILL INSTALLATION
(USING 1X BUCKSTRIP)

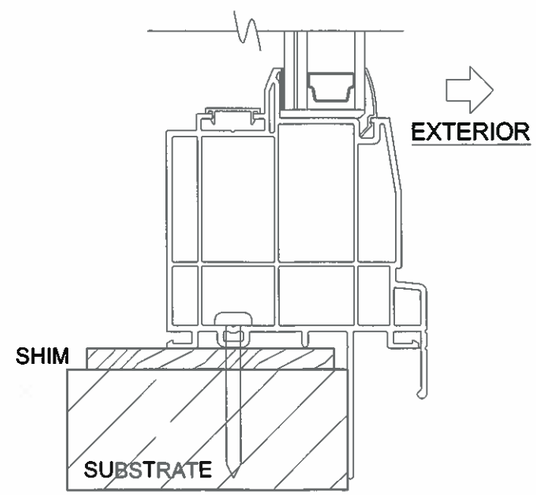

FIN FRAME,
SILL INSTALLATION
(DIRECTLY TO SUBSTRATE)

STATE OF TEXAS
ANTHONY LYNN MILLER
106954
LICENSED
PROFESSIONAL ENGINEER
9/3/13

INSTALLATION NOTES:

1) SEE SHEET 1 FOR SPACING REQUIREMENTS.
2) SEE TABLE(S) ON SHEET 1 FOR ANCHORAGE AND SUBSTRATE REQUIREMENTS.
3) MAX. SHIM THICKNESS TO BE 1/4".
4) GLASS SHOWN IS FOR ILLUSTRATIVE PURPOSES ONLY AND MAY DIFFER TO MEET DESIGN REQUIREMENTS.
5) FLANGE IS OPTIONAL AND MAY BE REMOVED.

PGT®
1070 TECHNOLOGY DRIVE
NOKOMIS, FL 34275

A. Lynn Miller, P.E.
P.E. #106954

Drawn By:	Date:	Material:
J. ROSOWSKI	09/03/13	VINYL
Revsd By:	Date:	Revisions:

THE INFORMATION, DESIGN OR DATA CONTAINED HEREIN IS THE EXCLUSIVE PROPERTY OF PGT INDUSTRIES AND CONSIDERED CONFIDENTIAL AND PROPRIETARY. NO PORTION OF THIS DOCUMENT MAY BE USED OR REPRODUCED IN ANY FORM WITHOUT THE EXPRESSED WRITTEN PERMISSION OF PGT INDUSTRIES.

Description:

Title: FIXED CASEMENT WINDOW

Series/Model:	Scale:	Sheet:	Drawing No.	Rev:
CA-540 "O"	NTS	4 of 4	TDI-CA540F.1	