WINTECH

Window Technology, Inc.
201 Industrial Drive Monett, MO 65708

Model 225 Aluminum Horizontal Sliding Window w/ Nail Fin

"NON-IMPACT"

EVALUATED FOR USE IN THE STATE OF TEXAS

The Horizontal Sliding Window described herein complies with the 2006 International Residential Code (IRC), Sections R301 & R613 and the 2006 International Building Code (IBC), Sections 1405.12, 1609, 1714.5, 2403 and 2404 (including Texas revisions) subject to the following conditions:

1. Anchors shall be as listed and spaced as shown in the details. Anchor embedment to base material shall be beyond wall dressing or stucco.
2. When used in areas requiring wind-borne debris protection this product is required to be protected with an impact resistant covering that complies with Section R301.2.1.2 of the IRC and Section 1609.1.2 of the IBC.
3. Allowable design pressure requirements must be equal to or less than the design pressure rating shown in the design pressure chart, sheet 1 of this drawing.
4. Conditions not covered by this drawing are subject to further engineering analysis.

TABLE OF CONTENTS

SHEET#	DESCRIPTION
1	Typical elevations, design pressures and general notes
2	Frame anchoring & cross sections
3	Cross sections
4	Components
5	Bill of materials & glazing details

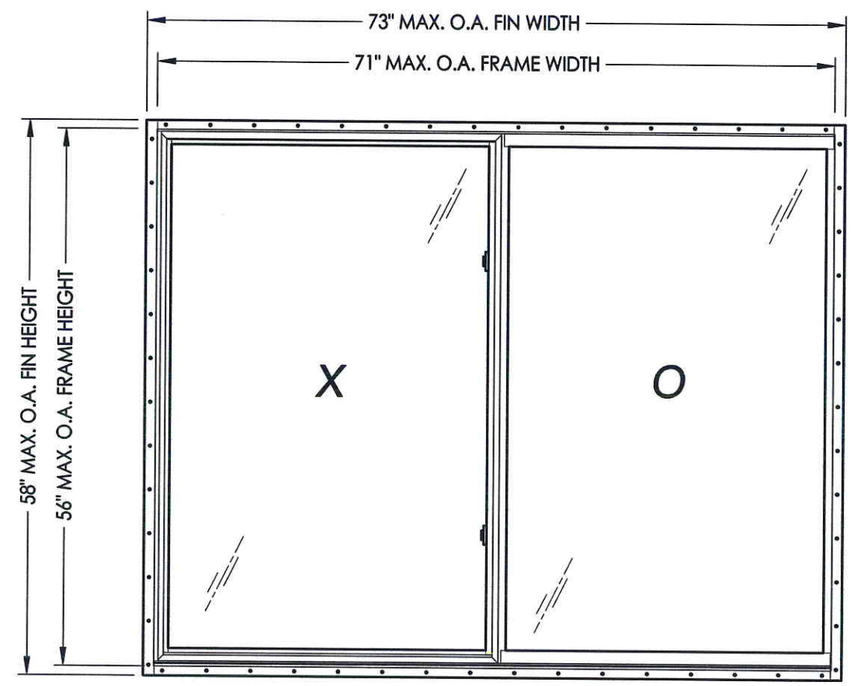

MAX. FRAME DIMENSION	MAX. D.L.O. DIMENSION	GLASS TYPE	DESIGN PRESSURE (PSF)	
			POSITIVE	NEGATIVE
46.0" X 27.0"	20.63" X 23.5"	G1	+25.0	-50.0
48.0" X 48.0"	21.63" X 44.5"	G1	+25.0	-40.0
71.0" X 56.0"	33.13" X 52.5"	G2	+25.0	-25.0

STATE OF TEXAS
LYNDON F. SCHMIDT
104123
LICENSED PROFESSIONAL ENGINEER
3.18.14

Documents Prepared By: Lyndon F. Schmidt, P.E.
TEXAS P.E. #104123
RW BUILDING CONSULTANTS, INC.
P.O. Box 230 Valrico FL. 33595
Phone No.: 813.659.9197
TEXAS BOARD OF PROFESSIONAL ENGINEERS CERTIFICATE OF REGISTRATION # F-11852

PRODUCT: Aluminum Horizontal Sliding Window

PART OR ASSEMBLY: TYPICAL ELEVATION, DESIGN PRESSURES & GENERAL NOTES

REVISIONS

NO.	DATE	BY

DATE: 5/23/13
SCALE: N.T.S.
DWG. BY: JK
CHK. BY: LFS
DRAWING NO.: TX-4328
SHEET 1 OF 5

© 2013 R.W. BUILDING CONSULTANTS INC.

R:\A - Projects\Project Folders\Proj 1701 - 1800\PF 1717\D. RWBC Drawings\TX-4328.dwg, TX-4328

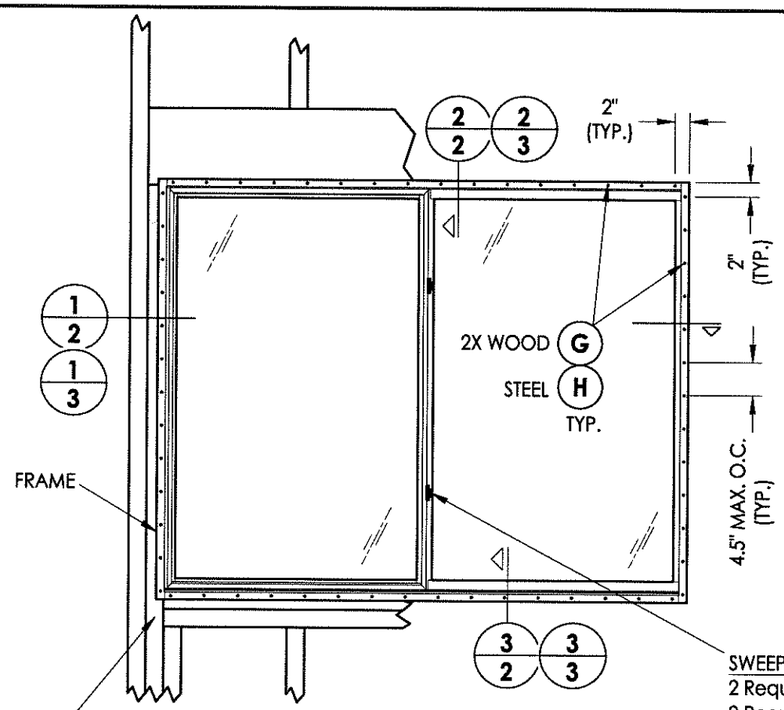

FRAME ANCHORING
2X Framing shown
(Steel Stud similar)

SWEEP LOCKS:
2 Required @ 12" from head & sill (> 48" height)
2 Required @ 1/4 points (≤ 48" height)
1 Required @ Centerline (≤ 27" height)

2X/Steel Stud Framing to be designed by Architect or Engineer of Record based on wind loads and the cladding being used.

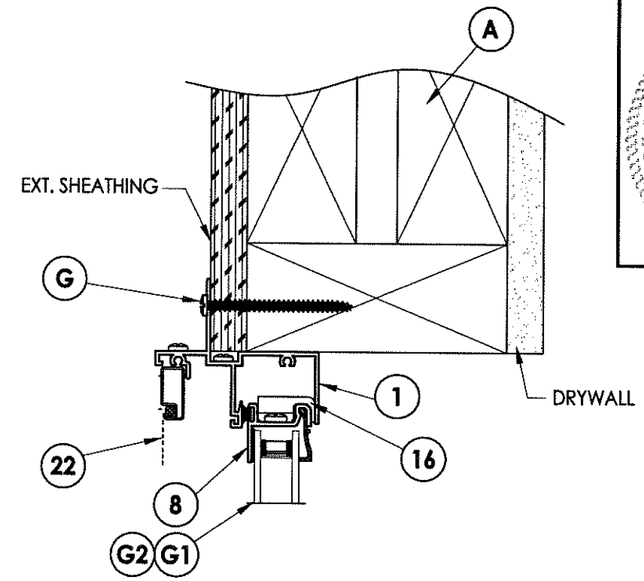

2/2 **VERTICAL CROSS SECTION**
2X Framing

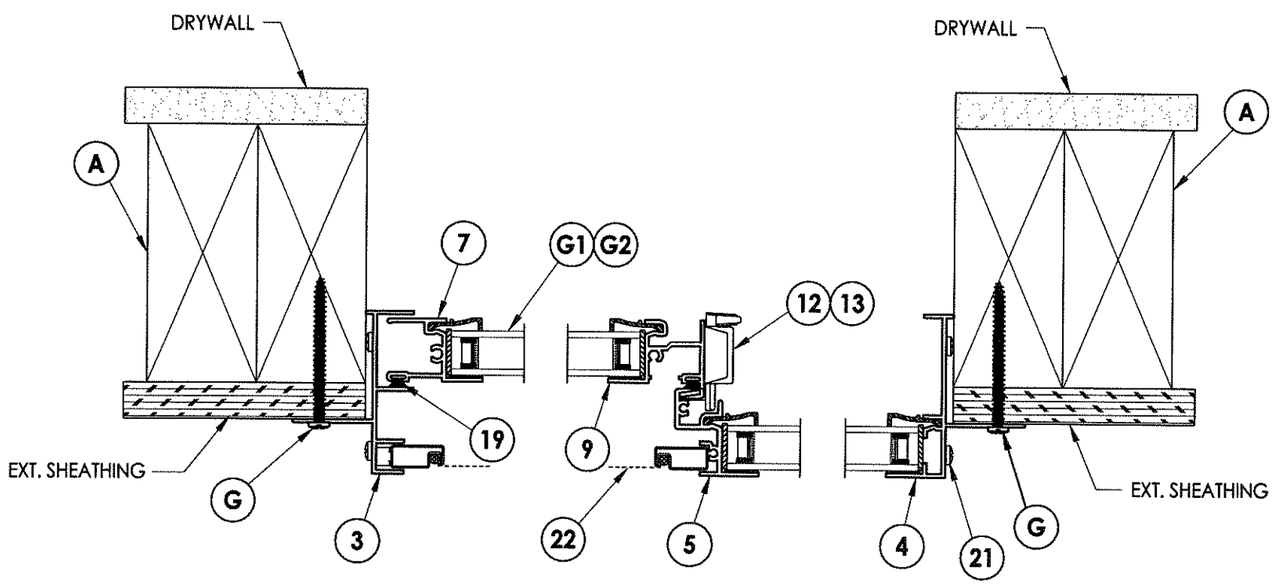

1/2 **HORIZONTAL CROSS SECTION**
2X Framing

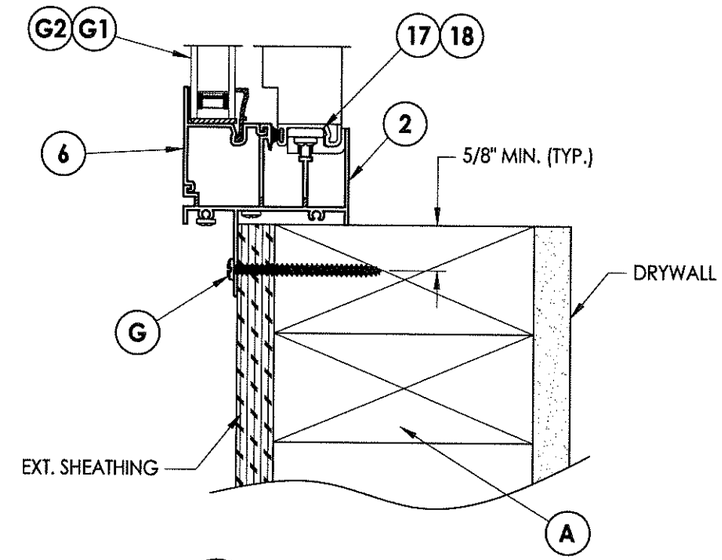

3/2 **VERTICAL CROSS SECTION**
2X Framing

STATE OF TEXAS
LYNDON F. SCHMIDT
104123
LICENSED PROFESSIONAL ENGINEER
3-18-14

Documents Prepared By: Lyndon F. Schmidt, P.E.
TEXAS P.E. #104123
RW BUILDING CONSULTANTS, INC.
P.O. Box 230 Valrico FL. 33595
Phone No.: 813.659.9197
TEXAS BOARD OF PROFESSIONAL ENGINEERS
CERTIFICATE OF REGISTRATION # F-11852

PRODUCT: *Aluminum Horizontal Sliding Window*

PART OR ASSEMBLY: *FRAME ANCHORING & CROSS SECTIONS*

NO.	DATE	REVISIONS	BY

DATE: 5/23/13
SCALE: N.T.S.
DWG. BY: JK
CHK. BY: LFS
DRAWING NO.: TX-4328
SHEET 2 OF 5

© 2013 R.W. BUILDING CONSULTANTS INC.

R:\A - Projects\Project Folders\Proj 1701 - 1800\PF 1717\D. RWBC Drawings\TX-4328.dwg, 2.1

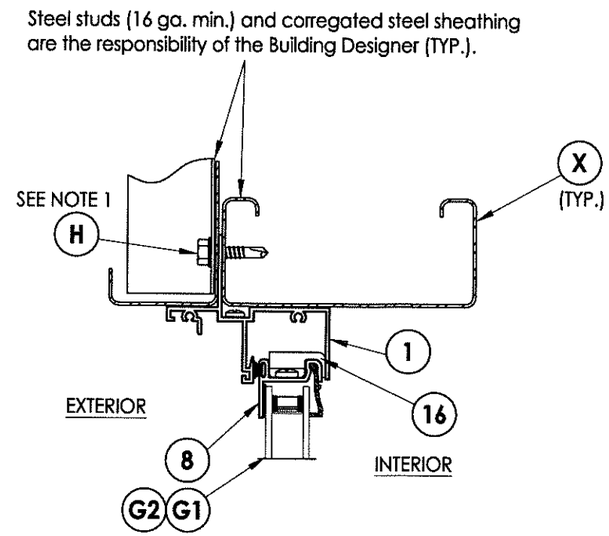

2/3 VERTICAL CROSS SECTION
Steel Stud Framing

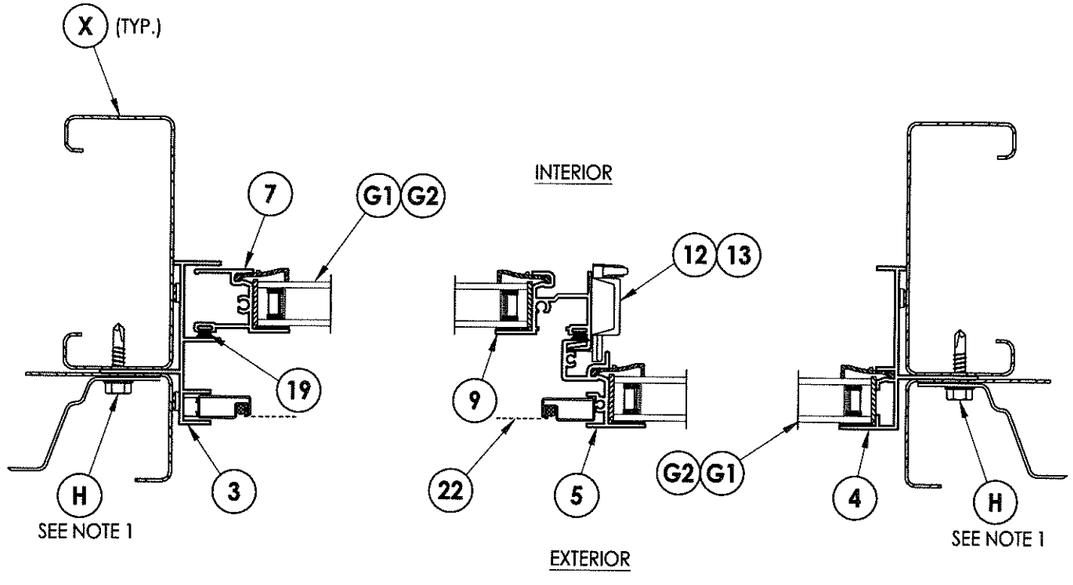

1/3 HORIZONTAL CROSS SECTION
Steel Stud Framing

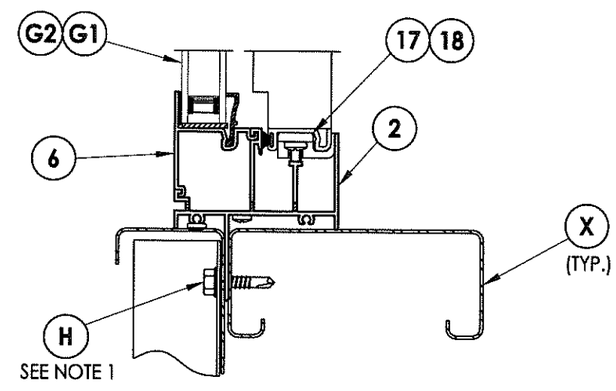

3/3 VERTICAL CROSS SECTION
Steel Stud Framing

NOTES:
1. A minimum of 3 threads must protrude through the steel stud framing.

STATE OF TEXAS
LYNDON F. SCHMIDT
104123
LICENSED
PROFESSIONAL ENGINEER
3-18-14

Documents Prepared By: Lyndon F. Schmidt, P.E.
TEXAS P.E. #104123

RW BUILDING CONSULTANTS, INC.
P.O. Box 230 Valrico FL. 33595
Phone No.: 813.659.9197

TEXAS BOARD OF PROFESSIONAL ENGINEERS
CERTIFICATE OF REGISTRATION # F-11852

PRODUCT: *Aluminum Horizontal Sliding Window*

PART OR ASSEMBLY: *CROSS SECTIONS*

NO.	DATE	REVISIONS	BY

DATE: 5/23/13
SCALE: N.T.S.
DWG. BY: JK
CHK. BY: LFS
DRAWING NO.: TX-4328
SHEET 3 OF 5

© 2013 R.W. BUILDING CONSULTANTS INC.

R:\A - Projects\Project Folders\Proj 1701 - 1800\PF 1717\D. RWBC Drawings\TX-4328.dwg, 3.1

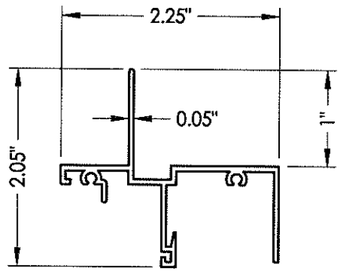

1 FRAME HEAD

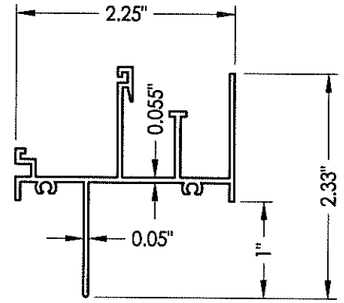

2 FRAME SILL

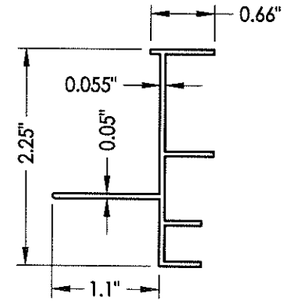

3 FRAME SASH JAMB

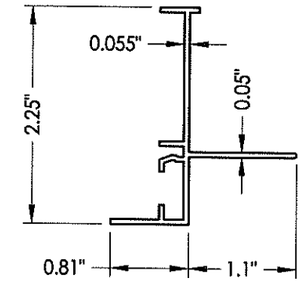

4 FRAME FIXED JAMB

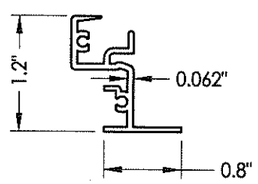

5 FRAME MEETING RAIL

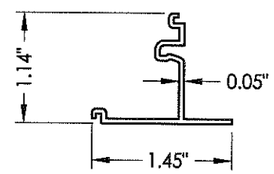

6 FRAME FIXED ADAPTER

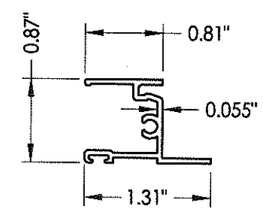

7 SASH SIDE RAIL

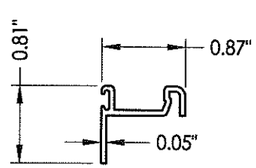

8 SASH HEAD/SILL

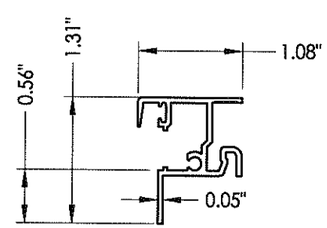

9 SASH MEETING RAIL

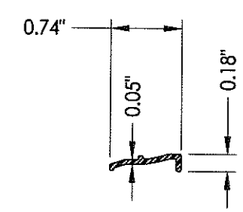

10 GLAZING BEAD

STATE OF TEXAS
LYNDON F. SCHMIDT
104123
LICENSED PROFESSIONAL ENGINEER

Documents Prepared By: Lyndon F. Schmidt, P.E.
TEXAS P.E. #104123

RW BUILDING CONSULTANTS, INC.
P.O. Box 230 Valrico FL 33595
Phone No.: 813.659.9197

TEXAS BOARD OF PROFESSIONAL ENGINEERS
CERTIFICATE OF REGISTRATION # F-11852

PRODUCT: *Aluminum Horizontal Sliding Window*

PART OR ASSEMBLY: *COMPONENTS*

NO.	DATE	REVISIONS	BY

DATE: 5/23/13
SCALE: N.T.S.
DWG. BY: JK
CHK. BY: LFS
DRAWING NO.: TX-4328
SHEET 4 OF 5

© 2013 R.W. BUILDING CONSULTANTS INC.

R:\A - Projects\Project Folders\Proj 1701 - 1800\PF 1717\D. RWBC Drawings\TX-4328.dwg, 4.1

BILL OF MATERIALS

ITEM #	DESCRIPTION	MATERIAL
A	2X FRAMING (SG >= 0.42)	WOOD
F	#6 X 1-1/2" PPH WOOD SCREW	STEEL
G	#8 X 2" PPH WOOD SCREW	STEEL
H	1/4-14 HWH TEKS SCREW (ITW BUILDEX - ZINC COATED)	STEEL
X	STEEL STUD Min. Thk .033" (ASTM A653 GRADE 33 Fy=33 ksi min., Fu=45 ksi min.)	STEEL
1	FRAME HEAD	6063-T5 ALUM
2	FRAME SILL	6063-T5 ALUM
3	FRAME SASH JAMB	6063-T5 ALUM
4	FRAME FIXED JAMB	6063-T5 ALUM
5	FRAME MEETING RAIL	6063-T5 ALUM
6	FRAME FIXED ADAPTER	6063-T5 ALUM
7	SASH SIDE RAIL	6063-T5 ALUM
8	SASH HEAD/SILL	6063-T5 ALUM
9	SASH MEETING RAIL	6063-T5 ALUM
10	GLAZING BEAD	PVC
12	SWEEP LOCK	-
13	#8 x 3/4" PPH SMS	STEEL
16	ROLLER HOUSING	-
17	ROLLER ASSEMBLY	-
18	#8 x 5/8" PPH SMS	STEEL
19	FIN WEATHERSTRIP (18018758BKWF)	-
20	SETTING BLOCKS (1/16" x 1" NEOP)	-
21	#6 x 5/8" PPH SMS (FRAME ASSEMBLY)	STEEL
22	SCREEN ASSY	-

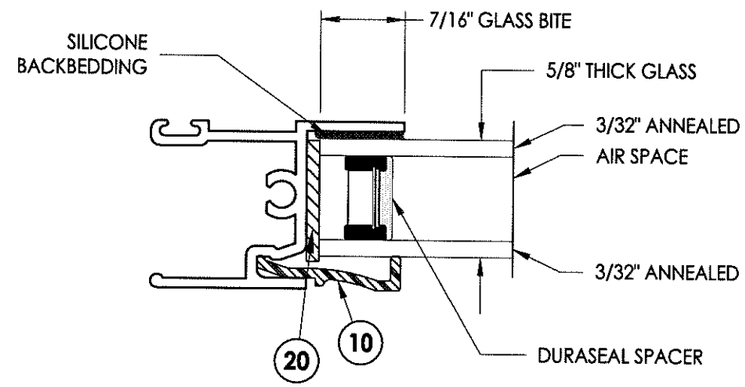

G1 GLAZING DETAIL

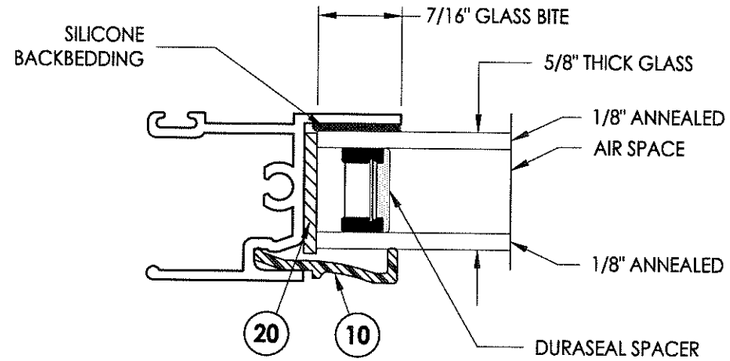

G2 GLAZING DETAIL

STATE OF TEXAS
LYNDON F. SCHMIDT
104123
LICENSED PROFESSIONAL ENGINEER
3/8/14

Documents Prepared By: Lyndon F. Schmidt, P.E.
TEXAS P.E. #104123

RW BUILDING CONSULTANTS, INC.
P.O. Box 230 Valrico FL. 33595
Phone No.: 813.659.9197

TEXAS BOARD OF PROFESSIONAL ENGINEERS
CERTIFICATE OF REGISTRATION # F-11852

PRODUCT: Aluminum Horizontal Sliding Window

PART OR ASSEMBLY: BILL OF MATERIALS & GLAZING DETAILS

NO.	DATE	REVISIONS	BY

DATE: 5/23/13
SCALE: N.T.S.
DWG. BY: JK
CHK. BY: LFS
DRAWING NO.: TX-4328
SHEET 5 OF 5

© 2013 R.W. BUILDING CONSULTANTS INC.

R:\A - Projects\Project Folders\Proj 1701 - 1800\PF 1717\D. RWBC Drawings\TX-4328.dwg, 5.1