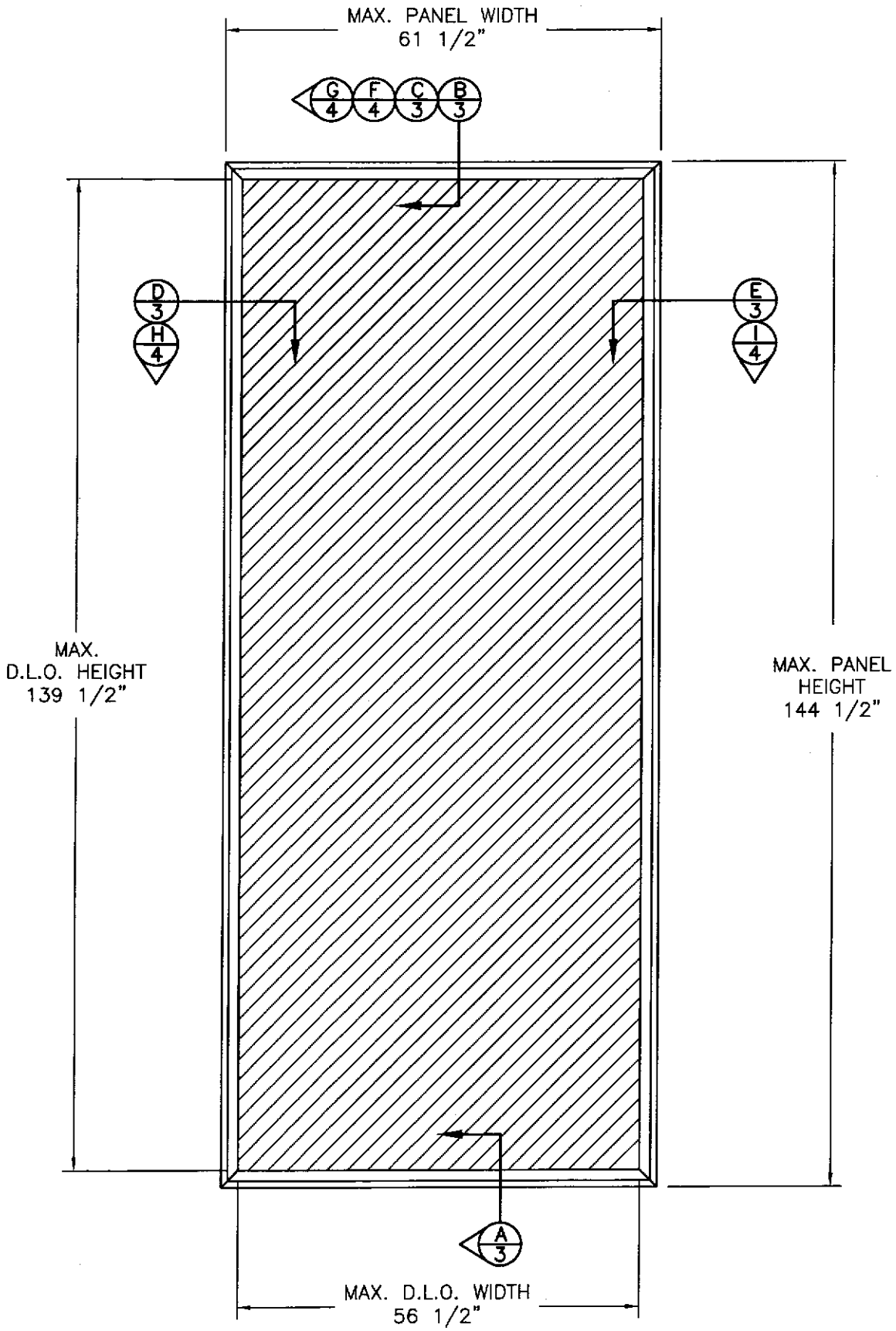

EXTERIOR ELEVATION

NOTES:

1) THE PRODUCT SHOWN HEREIN IS DESIGNED AND MANUFACTURED TO COMPLY WITH THE 2006 INTERNATIONAL BULDING CODE (IBC) AND INTERNATIONAL RESIDENTIAL CODE (IRC).

2) CONCRETE, MASONRY AND WOOD FRAMING TO BE DESIGNED AND ANCHORED TO PROPERLY TRANSFER ALL LOADS TO STRUCTURE. CONCRETE, MASONRY AND WOOD FRAMING DESIGN IS THE RESPONSIBILITY OF THE ARCHITECT OR ENGINEER OF RECORD.

3) PANEL FRAME MATERIAL: ALUMINUM ALLOY 6005–T5.

4) A MINIMUM GLASS SEPARATION DISTANCE OF 1" SHALL BE PROVIDED FOR ALL INSTALLATIONS.

TABLE OF CONTENTS

SHEETS	SHEET DESCRIPTION
1	ELEVATION & NOTES
2	ANCHORING & NOTES
3	INSTALLATION DETAILS IN CONCRETE & WOOD FRAME
4	INSTALLATION DETAILS IN CONCRETE & WOOD FRAME
5	COMPONENTS & B.O.M.

MAXIMUM ALLOWABLE DESIGN PRESSURE
±80.0 PSF

SYM	REVISION	DATE	BY
B	UPDATE TO 2006 IRC/IBC	9/23/09	SMC
A	REVISED ANCHOR LOCATIONS	11/30/[illegible]	[illegible]

Robert J. Amoruso, P.E.
Texas No. 80817
STATE OF TEXAS
ROBERT JAMES AMORUSO
80817
LICENSED
PROFESSIONAL ENGINEER
9/23/09
1304 N. Caswell St.
Rockledge, FL 32955
TX Certificate of Registration No. F–11354

FORT HURRICANE PRODUCTS, INC.
1100 25TH ST UNIT 7A
WEST PALM BEACH, FL 33407

TITLE: 28FX IMPACT SCREEN ELEVATION AND NOTES

PREPARED BY: PTC, LLC.
Phone 321.690.1788 Fax 321.690.1789

DRN:	DATE:
SMC	9/23/09
SCALE: NTS	DWG. NO: HSS0007
REV: B	SHEET: 1 OF 5

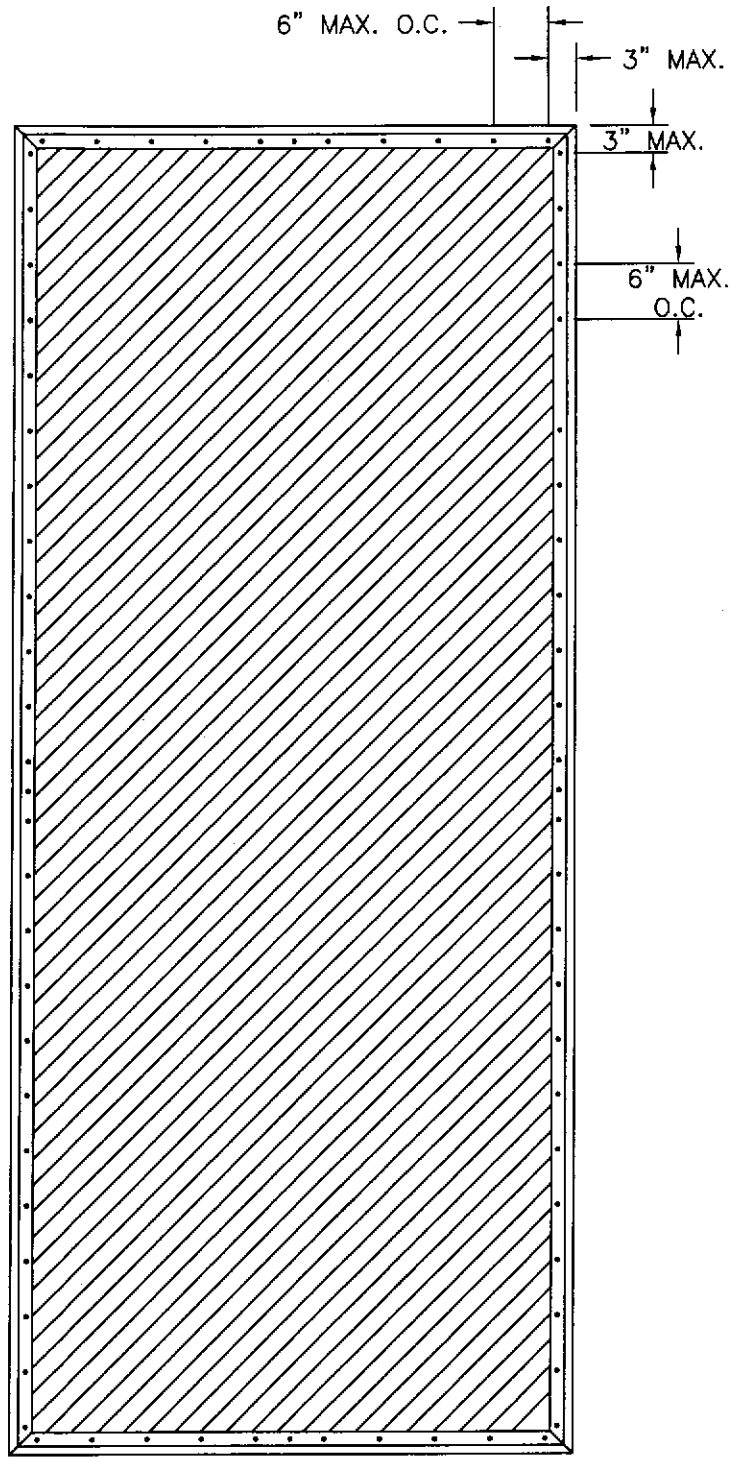

SCREEN FRAME TO
ALUMINUM TUBE ANCHORING
EXTERIOR ELEVATION

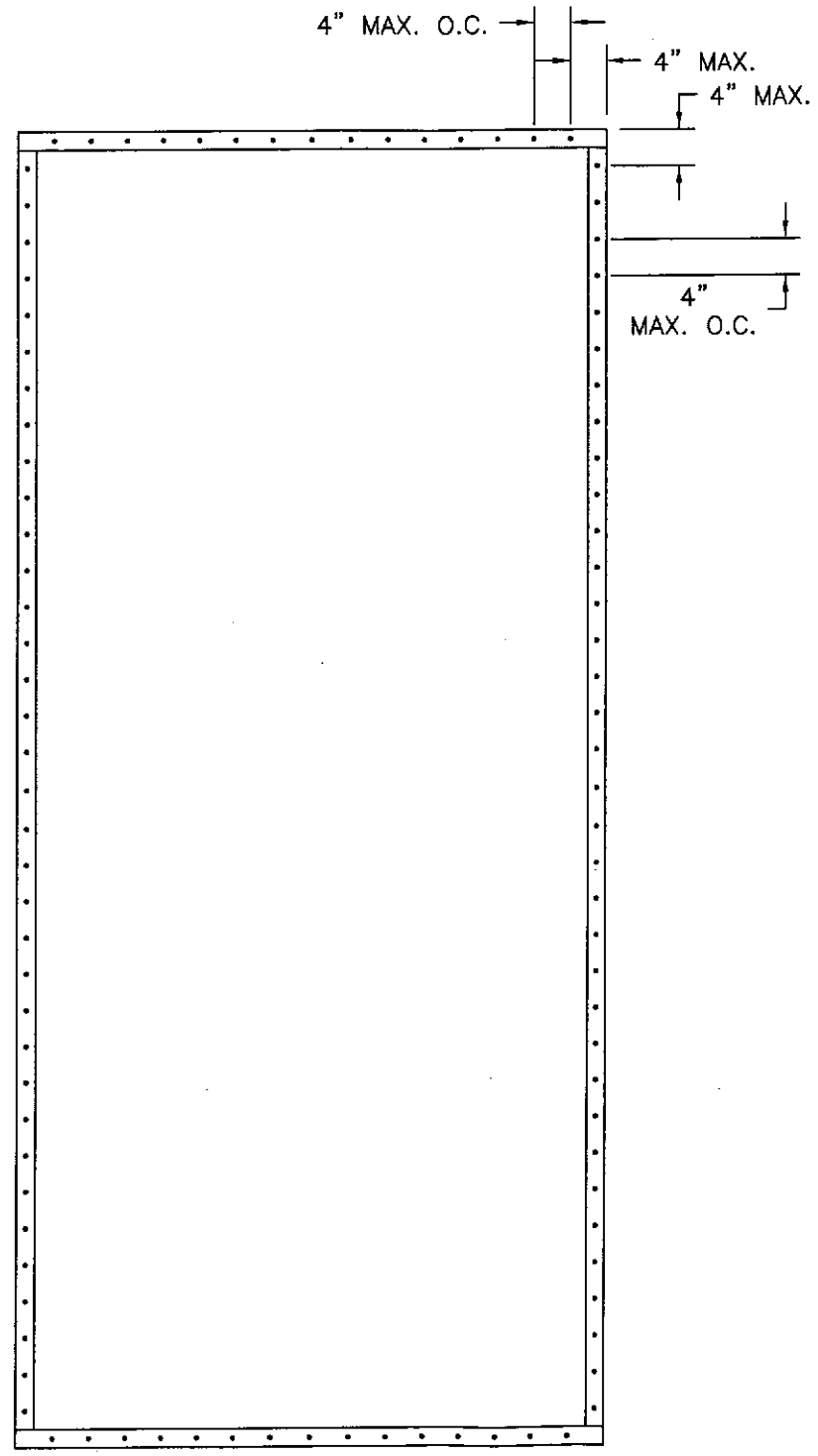

ALUMINUM TUBE TO
SUBSTRATE/WALL ANCHORING
EXTERIOR ELEVATION

NOTES:

1) TO INSTALL SUBFRAME TO MASONRY SUBSTRATE USE 1/4" DIA. ITW TAPCON ANCHORS OF SUFFICIENT LENGTH TO ACHIEVE A 1 1/4" MINIMUM EMBEDMENT INTO SUBSTRATE AND 1" MINIMUM EDGE DISTANCE.

2) TO INSTALL SUBFRAME TO WOOD FRAMING SUBSTRATE USE #12 WOOD SCREWS ANCHORS OF SUFFICIENT LENGTH TO ACHIEVE A 1 1/2" MINIMUM EMBEDMENT INTO SUBSTRATE AND 3/4" MINIMUM EDGE DISTANCE.

3) TO INSTALL FRAME TO SUBFRAME USE #12 X 3/4" HEX HEAD SMS.

SYM	REVISION	DATE	BY
B	UPDATE TO 2006 IRC/IBC	9/23/09	SMC
A	REVISED ANCHOR LOCATIONS	11/30/[illegible]	[illegible]

STATE OF TEXAS
Robert J. Amuruso, P.E.
Texas No. 80817
ROBERT JAMES AMURUSO
80817
LICENSED
PROFESSIONAL ENGINEER
9/24/09
PTC, LLC
1330 N. Cogswell St.
Rockledge, FL 32955
TX Certificate of Registration No. F-11354

FORT HURRICANE PRODUCTS, INC.
1100 25TH ST UNIT 7A
WEST PALM BEACH, FL 33407

TITLE: 28FX IMPACT SCREEN
ANCHORING LAYOUT AND NOTES

PREPARED BY: PTC, LLC.
Phone 321.690.1788 Fax 321.690.1789

DRN:	DATE:
SMC	9/23/09
SCALE: NTS	DWG. NO: HSS0007
REV: B	SHEET: 2 OF 5

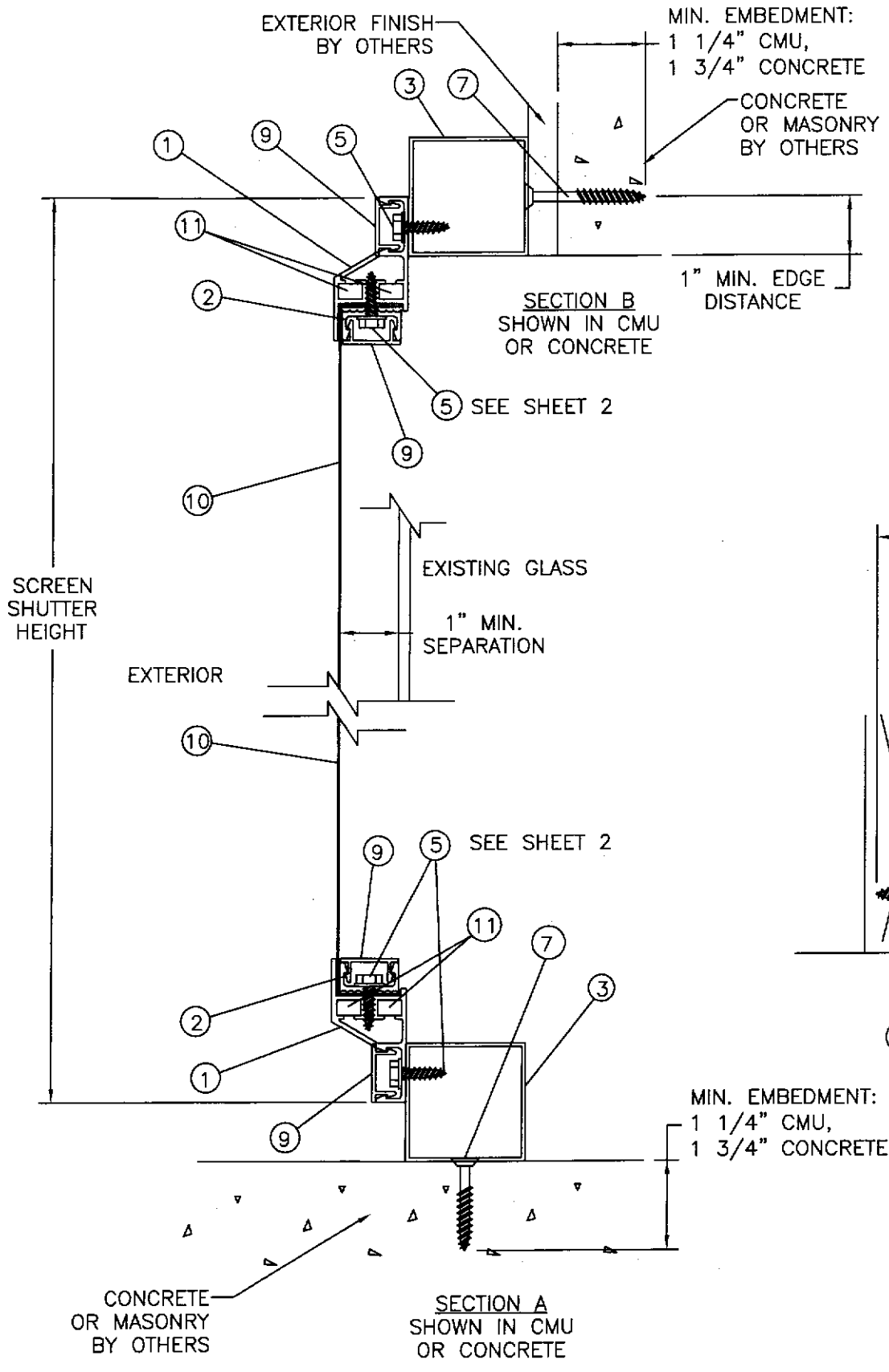

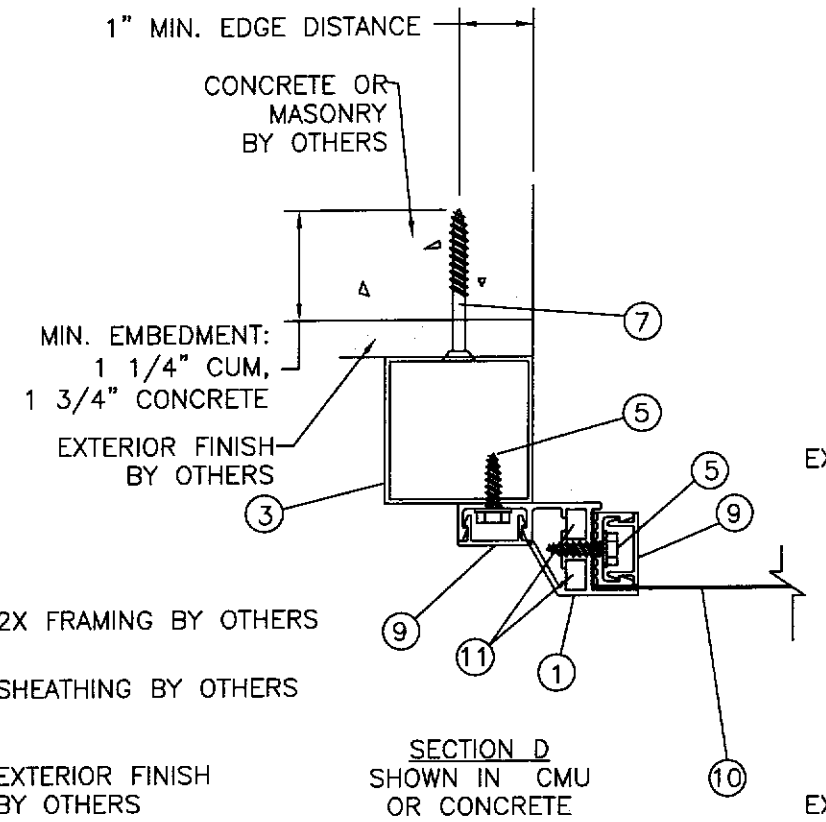

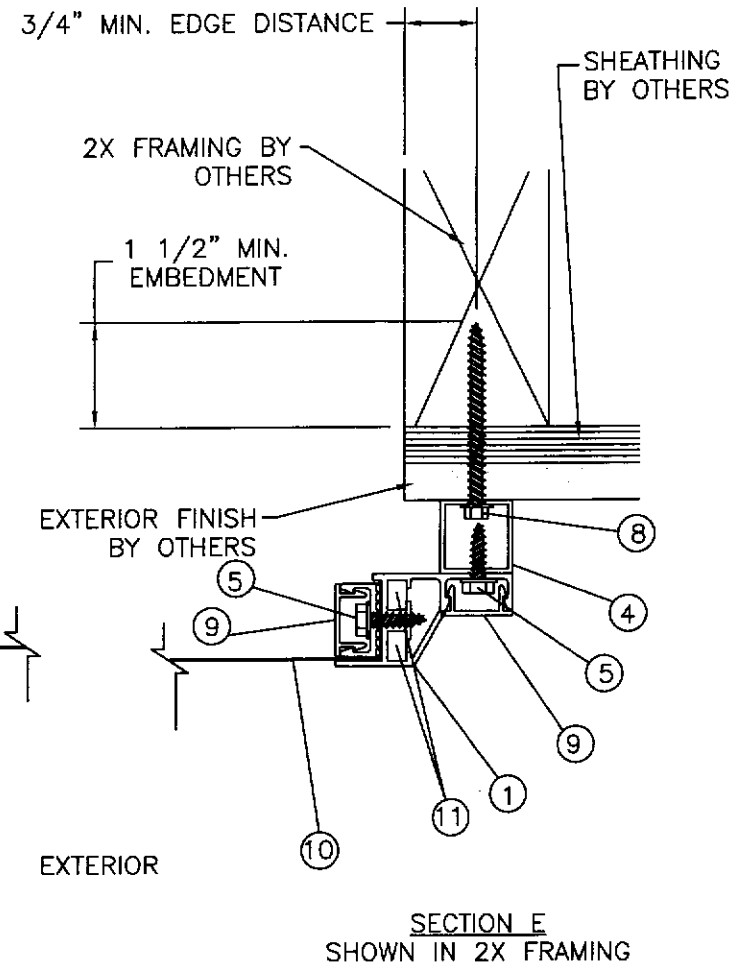

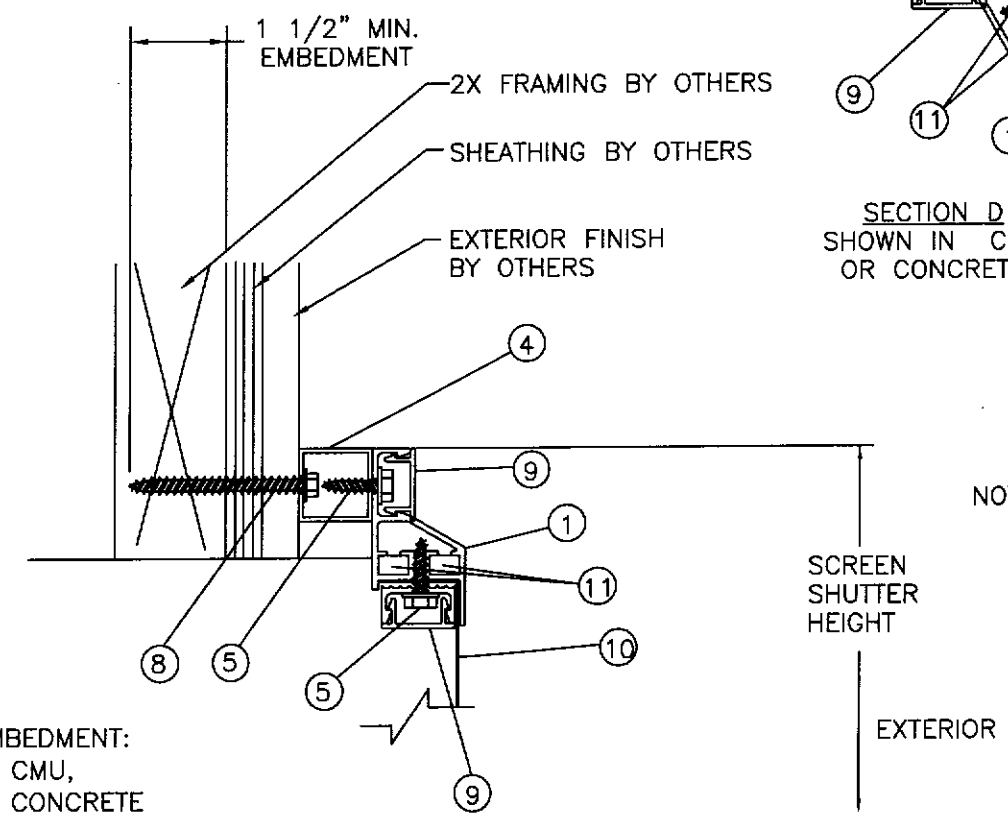

NOTES:

1. 2" ALUMINUM TUBE HAS A 1" MIN. EDGE DISTANCE WITH NO SETBACK FROM EDGE OF CONCRETE/MASONRY AT INSTALLATION.
2. 1" ALUMINUM TUBE HAS A 1" MIN. EDGE DISTANCE WITH 1/2" SETBACK FROM EDGE OF CONCRETE/MASONRY AT INSTALLATION.

SYM	REVISION	DATE	BY
B	UPDATE TO 2006 IRC/IBC	9/23/09	SMC
A	REVISED ANCHOR LOCATIONS	11/30/[illegible]	[illegible]

Robert J. Amoruso, P.E.
Texas No. 80817
ROBERT JAMES AMORUSO
80817
LICENSED
PROFESSIONAL ENGINEER
9/23/09
PTC, LLC
1555 N. Cogswell St.
Rockledge, FL 32955
TX Certificate of Registration No. F11354

FORT HURRICANE PRODUCTS, INC.
1100 25TH ST UNIT 7A
WEST PALM BEACH, FL 33407

TITLE: 28FX IMPACT SCREEN
INSTALLATION DETAILS IN CONCRETE AND WOOD FRAMING

PREPARED BY: PTC, LLC.
Phone 321.690.1788 Fax 321.690.1789

DRN:	DATE:
SMC	9/23/09
SCALE: NTS	DWG. NO: HSS0007
REV: B	SHEET: 3 OF 5

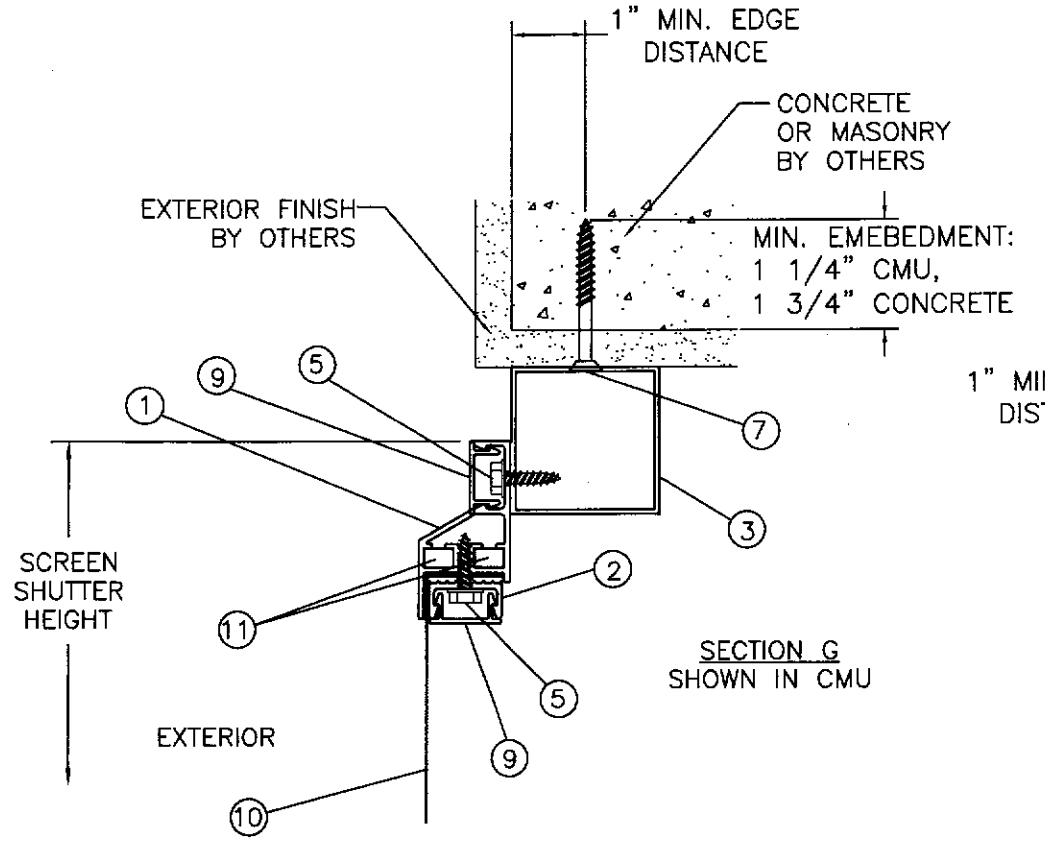

SECTION G
SHOWN IN CMU

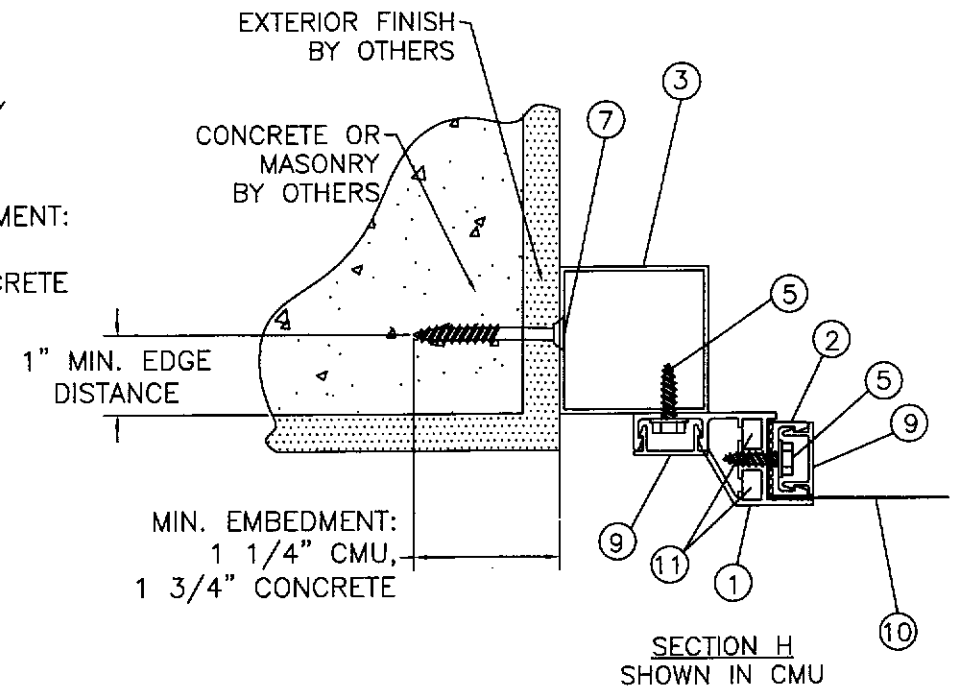

SECTION H
SHOWN IN CMU

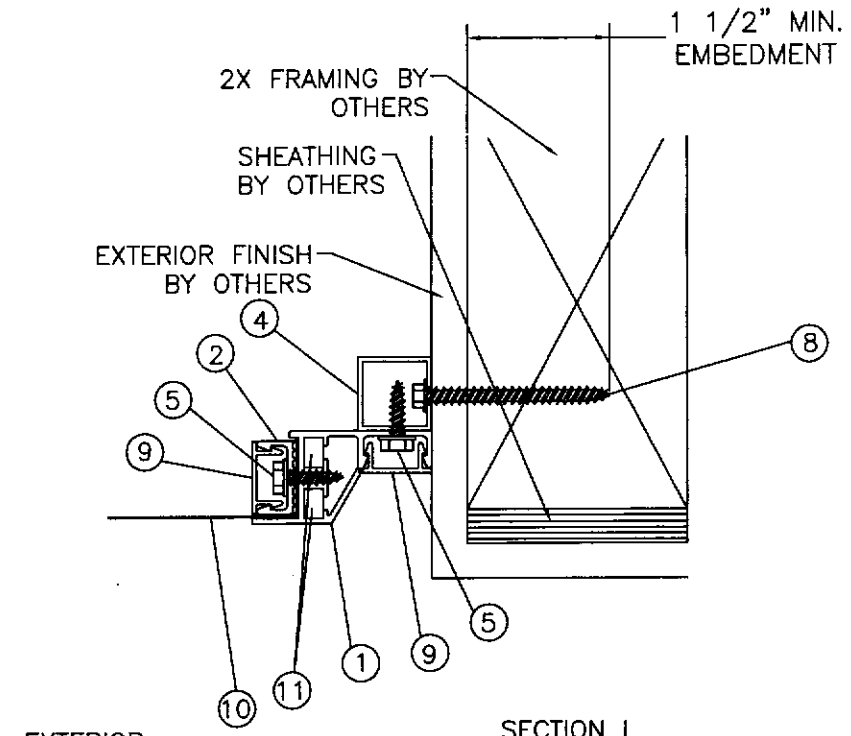

SECTION I
SHOWN IN 2X FRAMING

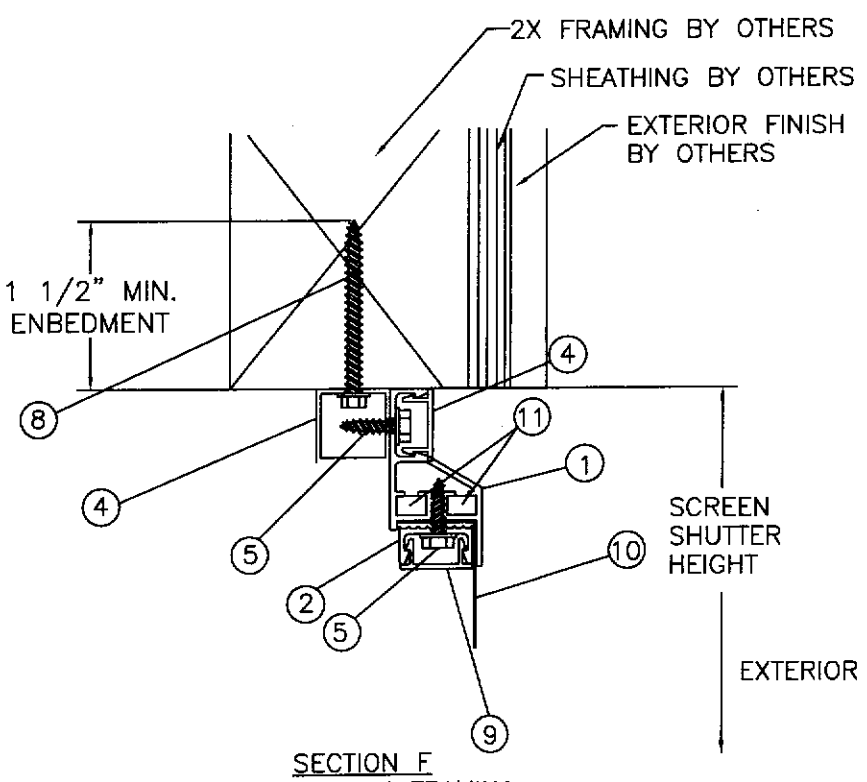

SECTION F
SHOWN IN 2X FRAMING

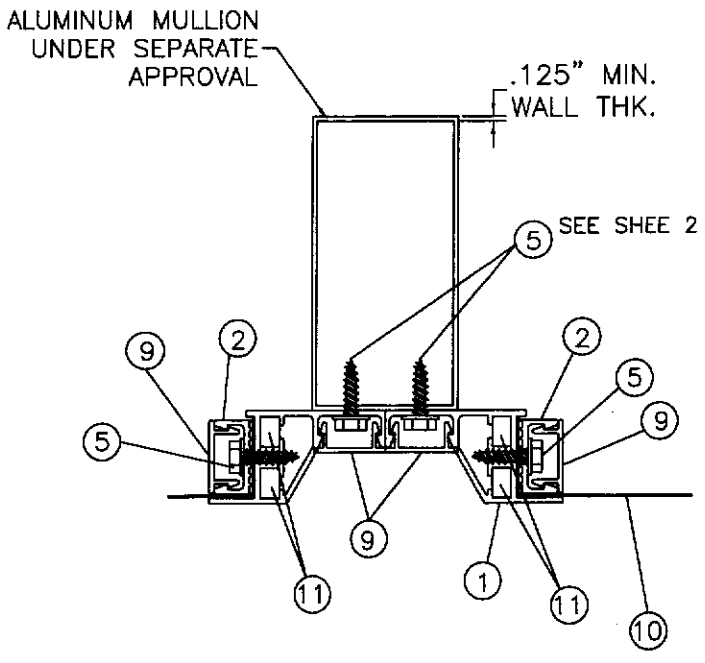

OPTIONAL ALUMINUM MULLION INSTALLATION
MULLION UNDER SEPARATE APPROVAL

NOTES:

1. 2" ALUMINUM TUBE HAS A 1" MINIMUM SETBACK FROM EDGE OF CONCRETE/MASONRY AT INSTALLATION.
2. 1" ALUMINUM TUBE HAS A 1 1/2" MINIMUM SETBACK FROM EDGE OF CONCRETE/MASONRY AT INSTALLATION.

SYM	REVISION	DATE	BY
B	UPDATE TO 2006 IRC/IBC	9/23/09	SMC
A	REVISED ANCHOR LOCATIONS	11/30/0[illegible]	[illegible]

STATE OF FLORIDA
Robert J. Amoruso, P.E.
Texas [illegible] No. 80817
ROBERT JAMES AMORUSO
80817
LICENSED PROFESSIONAL ENGINEER
9/24/09

PTC, LLC
[illegible] N. Cogswell St.
Rockledge, FL 32955
TX Certificate of Registration No. F-11354

FORT HURRICANE PRODUCTS, INC.
1100 25TH ST UNIT 7A
WEST PALM BEACH, FL 33407

TITLE: 28FX IMPACT SCREEN
INSTALLATION DETAILS IN CONCRETE AND WOOD FRAMING

PREPARED BY:
PTC
PTC, LLC.
Phone 321.690.1788 Fax 321.690.1789

DRN:	DATE:
SMC	9/23/09
SCALE: NTS	DWG. NO: HSS0007
REV: B	SHEET: 4 OF 5

① FRAME HEAD, SILL & JAMB
TYP. WALL THICKNESS 0.075

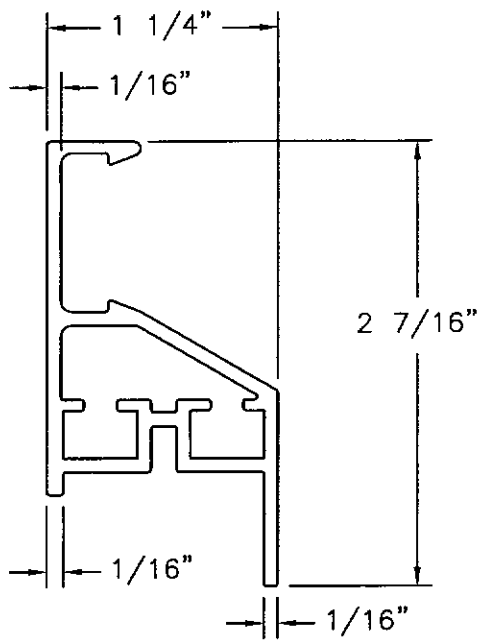

② WIRE RETAINER
TYP. WALL THICKNESS 0.075

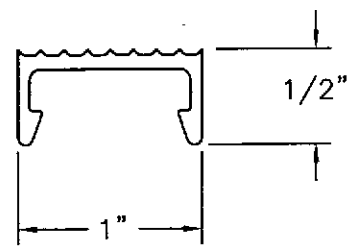

③ 2" X 2" ALUMINUM TUBE
TYP. WALL THICKNESS 0.062

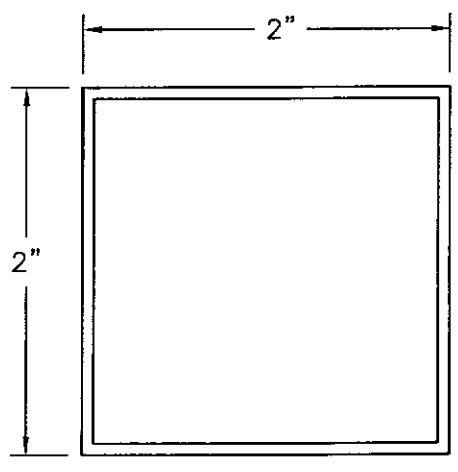

⑨ SCREW COVER
TYP. WALL
THICKNESS 0.050

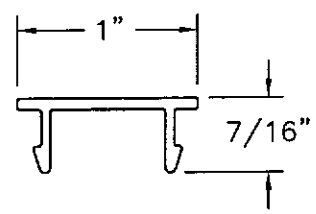

④ 1" X 1" ALUMINUM TUBE
TYP. WALL
THICKNESS 0.062

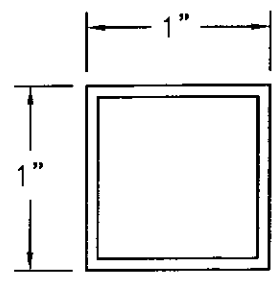

BILL OF MATERIALS

ITEM #	PART #	DESCRIPTION
1	2713	FRAME HEAD, SILL & JAMB 6005-T6 ALUMINUM
2	2721	WIRE RETAINER 6005-T6 ALUMINUM
3		2" X 2" X 1/16" ALUMINUM TUBE 6005-T5 ALUMINUM
4		1" X 1" 1/16" ALUMINUM TUBE 6005-T5 ALUMINUM
5		#12-14 X 3/4" HEX HEAD SMS SCREW
6		NOT USED
7		1/4" X 2 1/4" ITW TAPCON
8		#12 WOOD SCREW
9	2730	SCREW COVER
10		MESH 12X12 SCREEN SS 304 THREAD 0.028" OR 0.032" THICK
11		CORNER KEY 2" X 2" X 1.1" X 1/4"

SYM	REVISION	DATE	BY
B	UPDATE TO 2006 IRC/IBC	9/23/09	SMC
A	REVISED ANCHOR LOCATIONS	11/30/09	DRL

STATE OF TEXAS
ROBERT JAMES AMORUSO
80817
LICENSED
PROFESSIONAL ENGINEER
9/24/09

Robert J. Amoruso, P.E.
Texas No. 80817
PTC, LLC
1535 N. Cogswell St.
Rockledge, FL 32955
TX Certificate of Registration No. F-11354

FORT HURRICANE PRODUCTS, INC.
1100 25TH ST UNIT 7A
WEST PALM BEACH, FL 33407

TITLE: 28FX IMPACT SCREEN COMPONENTS AND B.O.M.

PREPARED BY: PTC, LLC.
Phone 321.690.1788 Fax 321.690.1789

DRN:	DATE:
SMC	9/23/09
SCALE: NTS	DWG. NO: HSS0007
REV: B	SHEET: 5 OF 5