ROYAL SPAN PANEL TYPICAL DETAILS OVER PLYWOOD

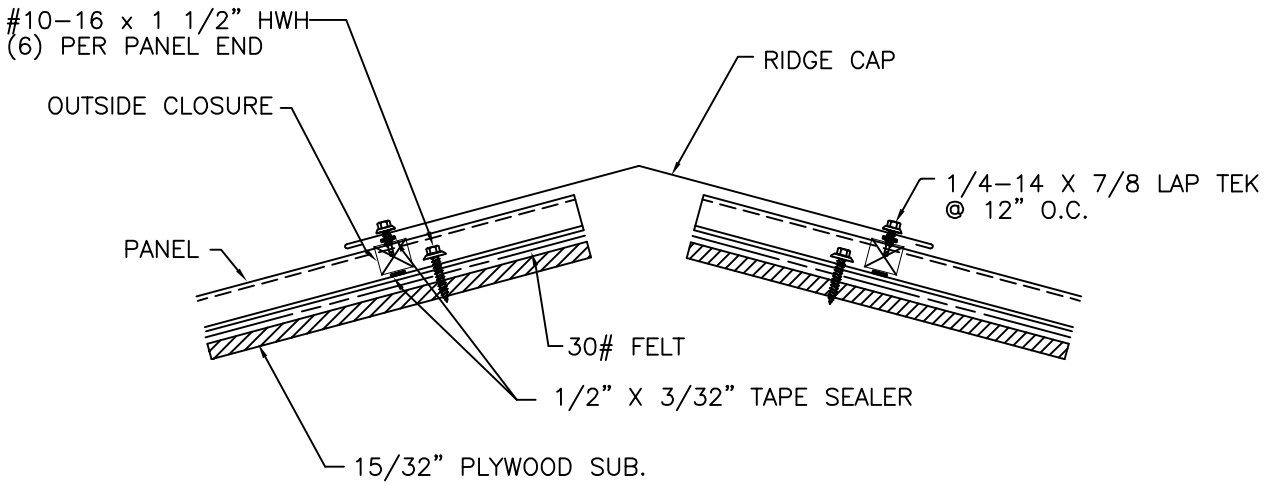

TYPICAL DETAILS
RIDGE

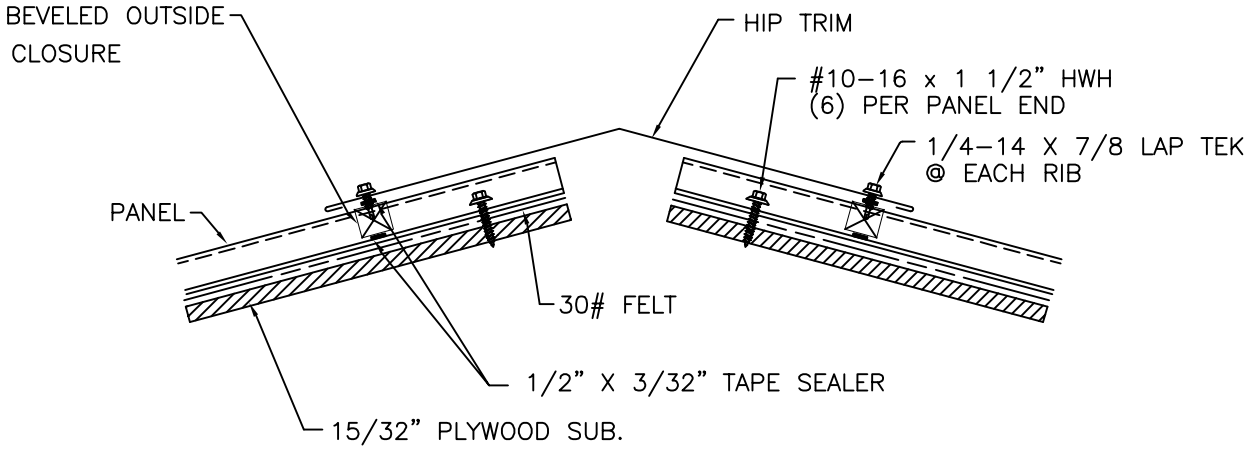

TYPICAL DETAILS