# PLY GEM WINDOWS

## *SERIES 6100/8100/9100 ALUMINUM HORIZONTAL MULLION*

NOTES:

1. THE PRODUCT SHOWN HEREIN IS DESIGNED AND MANUFACTURED TO COMPLY WITH THE 2006 & 2009 INTERNATIONAL BUILDING CODE (IBC) AND INTERNATIONAL RESIDENTIAL CODE (IRC) WITH 2006 TEXAS REVISIONS, EFFECTIVE JANUARY 1, 2008, EXCLUDING HVHZ.
2. MULLION INSTALLATION DETAILS APPLY TO PLY GEM WINDOWS' 6100/8100/9100 ALUMINUM EXTRUDED WITH STEEL ANCHOR CLIP WHEN USED TO MULL WINDOWS ONE ABOVE THE OTHER.
3. APPROVED IMPACT PROTECTIVE SYSTEM IS NOT REQUIRED ON THIS PRODUCT IN WIND BORNE DEBRIS REGIONS ZONE 3 OR LESS.
4. USE #10 WOOD SCREWS OF SUFFICIENT LENGTH TO ACHIEVE MINIMUM EMBEDMENT OF 1 1/2" INTO WOOD FRAMING. (SEE CHARTS & NOTES ON SHEETS 3 & 4 FOR DESIGN PRESSURE AND ANCHOR NOTES).
5. USE #10 SELF-TAPPING, SAE GRADE 5, SCREWS OF SUFFICIENT LENGTH TO ACHIEVE A MINIMUM PENETRATION OF 3 THREADS BEYOND ALUMINUM FRAMING. (SEE CHARTS & NOTES ON SHEET 3 FOR DESIGN PRESSURE AND ANCHOR NOTES).
6. USE 3/16" ITW TAPCON TYPE INSTALLATION ANCHORS OF SUFFICIENT LENGTH TO ACHIEVE A MINIMUM EMBEDMENT OF 1 1/4" INTO CONCRETE/MASONRY SUBSTRATES.
7. MULLION CLIPS SHALL BE FASTENED TO THE ALUMINUM MULLION THROUGH THE SCREW SPLINES WITH TWO (2) #10 X 1" GR. 5 SCREWS AT EACH MULLION END. SEE SHEET 2 FOR DETAILS.
8. MULLION CLIPS SHALL BE FASTENED TO THE WINDOW FRAMES WITH FOUR (4) #8 X 1/2" GR. 5 SCREWS AT EA. MULLION END. SEE SHEET 2 FOR DETAILS.
9. 2X BUCKS (WHEN USED) SHALL BE DESIGNED AND ANCHORED TO PROPERLY TRANSFER ALL LOADS TO THE STRUCTURE. BUCK DESIGN AND ANCHOR LAYOUT IS THE RESPONSIBILITY OF THE ENGINEER OR ARCHITECT OF RECORD FOR THE PROJECT OF INSTALLATION.
10. ADEQUACY OF THE EXISTING STRUCTURAL CONCRETE/MASONRY AND 2X FRAMING AS A MAIN WIND FORCE RESISTING SYSTEM CAPABLE OF WITHSTANDING AND TRANSFERRING APPLIED PRODUCT LOADS TO THE FOUNDATION IS THE RESPONSIBILITY OF THE ENGINEER OR ARCHITECT OF RECORD FOR THE PROJECT OF INSTALLATION.
11. INSTALLATION ANCHORS AND ASSOCIATED HARDWARE MUST BE MADE OF CORROSION RESISTANT MATERIAL OR HAVE A CORROSION RESISTANT COATING.
12. SEE CHARTS & NOTES ON SHEETS 3 & 4 FOR DESIGN PRESSURE.
13. THIS MULLION IS ONLY VALID WHEN USED IN CONJUNCTION WITH APPLICABLE PLY GEM WINDOWS PRODUCTS.
14. ALL WINDOWS USED WITH THIS MULLION SHALL BE QUALIFIED UNDER SEPARATE APPROVAL.
15. MULLION MATERIAL: 6063-T6 ALUMINUM.
16. MULLION CLIP MATERIAL: 16 GA. GALVANIZED STEEL (MIN. Fy = 36 KSI)
17. INSTALLATION ANCHOR CAPACITIES FOR PRODUCTS HEREIN ARE BASED ON SUBSTRATE MATERIALS WITH THE FOLLOWING PROPERTIES:
    a. WOOD - MINIMUM SPECIFIC GRAVITY OF 0.42.
    b. CONCRETE - MINIMUM COMPRESSIVE STRENGTH OF 2700 PSI.
    c. CMU - SHALL CONFORM TO STRENGTH REQUIREMENTS OF ASTM C90
    d. ALUMINUM - 6063-T5 (MIN. THICKNESS 0.092"); 6063-T6 (MIN. THICKNESS 0.076")
    e. STEEL - MINIMUM Fy = 36 KSI, MINIMUM Fu = 58 KSI (MINIMUM THICKNESS 18 GA. - 0.0478")

TABLE OF CONTENTS


| SHEET | REVISION | SHEET DESCRIPTION |
|---|---|---|
| 1 | - | MULLION ASSEMBLY ELEVATIONS & NOTES |
| 2 | - | MULLION SECTION DETAILS AND ANCHORING |
| 3 | - | DESIGN PRESSURE CHARTS W/ OUT REINF. |
| 4 | - | DESIGN PRESSURE CHART W/ REINF. |


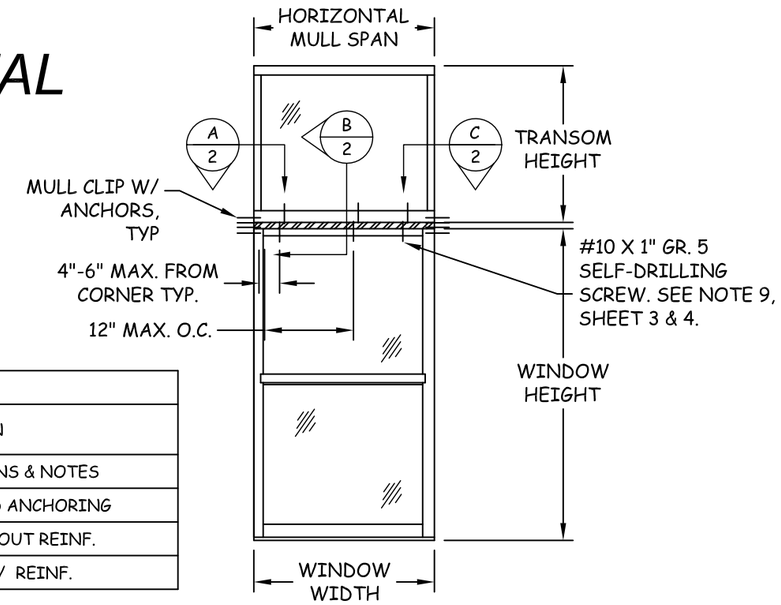


**HORIZONTAL MULLION FOR SINGLE WINDOW W/ TRANSOM**

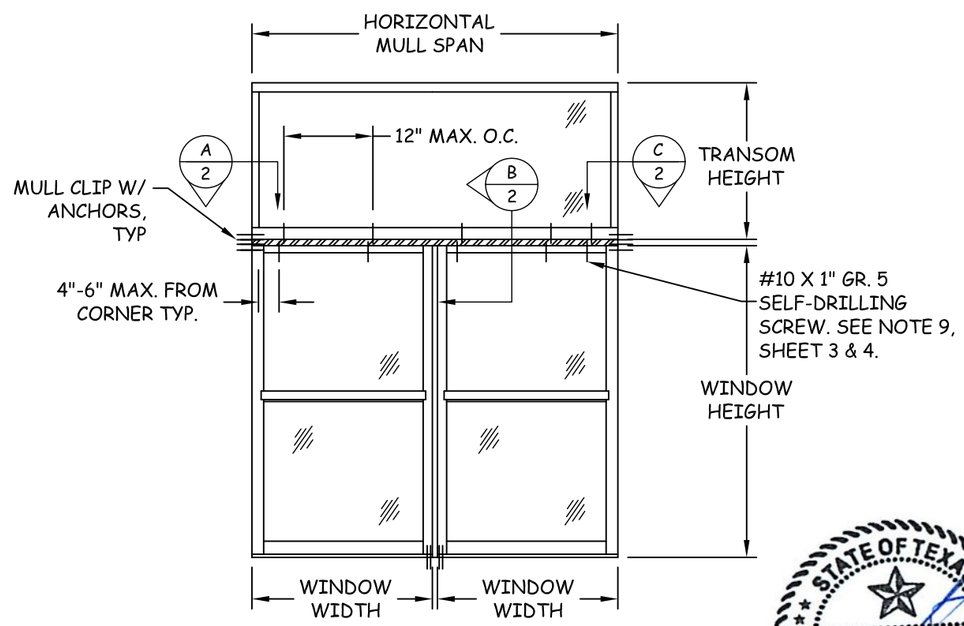


**HORIZONTAL MULLION FOR TWIN WINDOWS W/ TRANSOM**

STATE OF TEXAS
ALEXIS SPYROU
102957
LICENSED
PROFESSIONAL ENGINEER

2-20-12


PLY GEM WINDOWS
433 N. MAIN ST., PO BOX 559, ROCKY MOUNT, VA 24151
PH: 540-484-6348 FX: 540-484-6683


TITLE: 6100/8100/9100 AL. MULL MULLION ASSEMBLY ELEVATION AND NOTES


PREPARED BY: BUILDING DROPS
127 W. FAIRBANKS AVE., STE. 438
WINTER PARK, FL 32789
PH: (407) 644-6957 FX: (407) 644-2366


REVISIONS

| NO. | DESCRIPTION | BY | DATE |
|---|---|---|---|
| | | | |

ALEX SPYROU
2012.02.20
16:51:39
-05'00'

ALEXIS SPYROU, P.E.
TEXAS P. E. NO. 102957
127 W. FAIRBANKS AVE., STE. 438
WINTER PARK, FL 32789

DATE: 2.15.12 | DWN BY: MSS | CHK BY: HFN | SCALE: NTS

DWG #: PGW081

SHEET: 1 OF 4

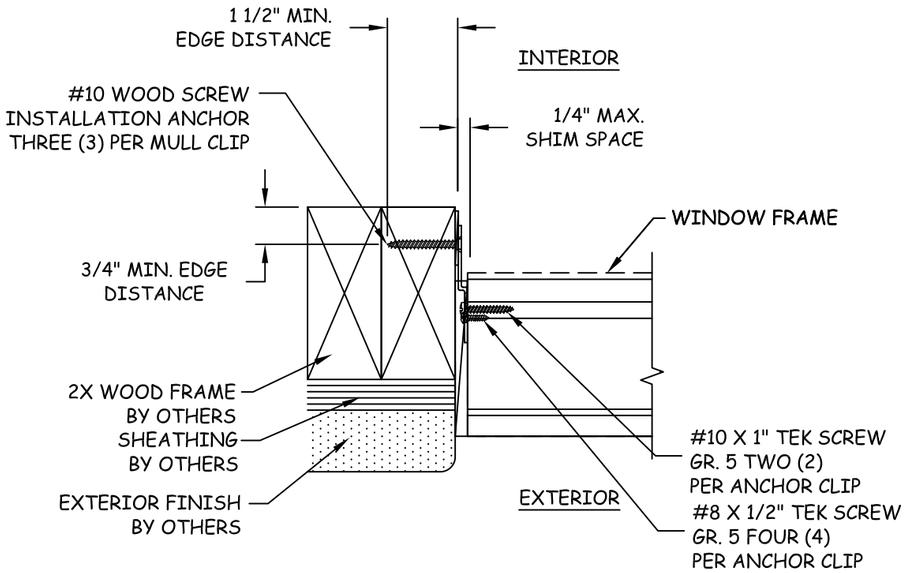


## A/2 HORIZONTAL SECTION

**JAMB - 2X WOOD**

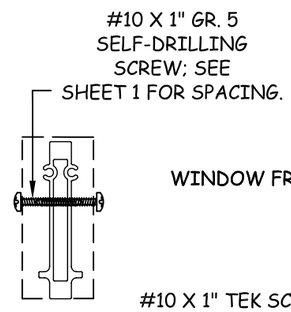


## B/2 VERTICAL SECTION

**6100/8100/9100 ALUMINUM MULLION**
**SEE SHEET 4 FOR REINF. OPTIONS**

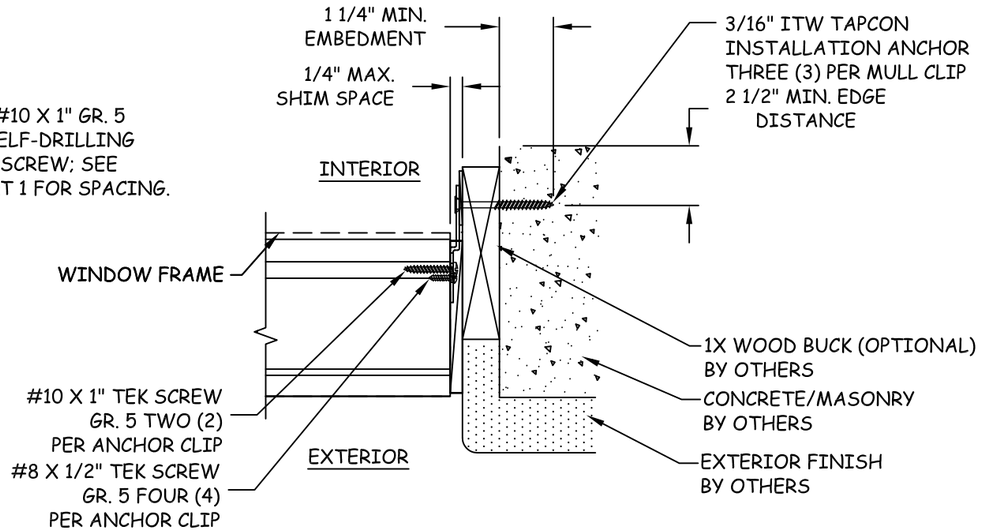


## C/2 HORIZONTAL SECTION

**JAMB - 1X WOOD/CONCRETE/MASONRY**

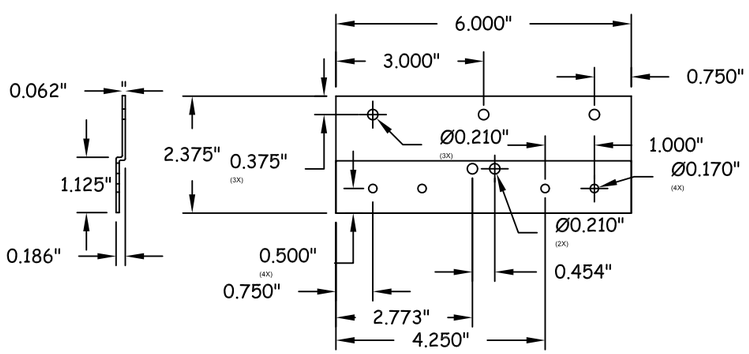


## MULL CLIP DETAIL

**PART NO. 653984**

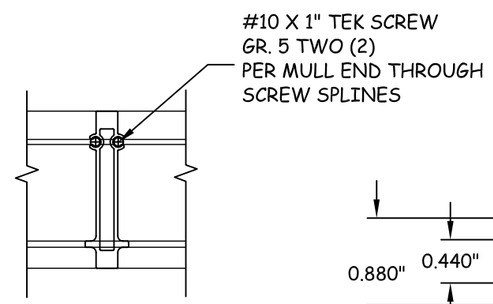


## T-MULL CONNECTION

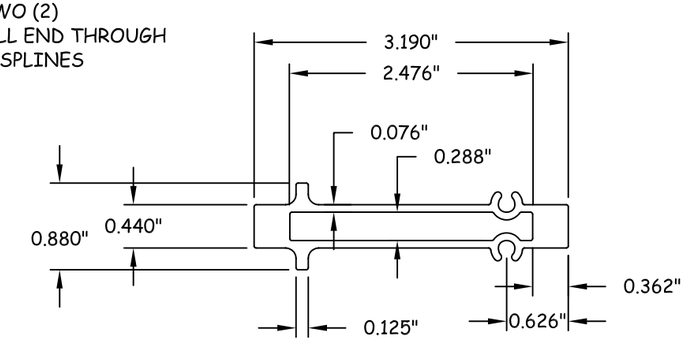


## MULLION SECTION DETAIL

**ALUMINUM MULLION: 6063-T6**

STATE OF TEXAS
ALEXIS SPYROU
102957
LICENSED
PROFESSIONAL ENGINEER

2-20-12

PLY GEM WINDOWS
433 N. MAIN ST., PO BOX 559,
ROCKY MOUNT, VA 24151
PH: 540-484-6348 FX: 540-484-6683

TITLE: 6100/8100/9100 AL. MULL MULL SECTION DETAILS AND ANCHORING

PREPARED BY:
BUILDING DROPS
127 W. FAIRBANKS AVE., STE. 438
WINTER PARK, FL 32789
PH: (407) 644-6957 FX: (407) 644-2366

REVISIONS

| NO. | DESCRIPTION | BY | DATE |
|---|---|---|---|
| | | | |

ALEXIS SPYROU, P.E.
TEXAS P.E. NO. 102957
127 W. FAIRBANKS AVE., STE. 438
WINTER PARK, FL 32789

DATE: 2.15.12
DWN BY: MSS
CHK BY: HFN
SCALE: NTS

DWG #: PGW081

SHEET: 2 OF 4

# DESIGN PRESSURE CHARTS

***Maximum design pressure capacity chart***

***6100/8100/9100 Aluminum Horizontal mullion, Single with Transom***

*Design pressures are limited either by mullion or anchor screw or anchor clip capacity.*

| Height (in) | | Unit width (in) | | | | | | | | |
|---|---|---|---|---|---|---|---|---|---|---|
| Window | Transom | ***24.0*** | ***27.0*** | ***30.0*** | ***33.0*** | ***36.0*** | ***39.0*** | ***42.0*** | ***45.0*** | ***48.0*** |
| ***24.0*** | ***12.0*** | 100.0 | 100.0 | 100.0 | 100.0 | 100.0 | 100.0 | 100.0 | 100.0 | 100.0 |
| ***30.0*** | ***15.0*** | 100.0 | 100.0 | 100.0 | 100.0 | 100.0 | 100.0 | 100.0 | 100.0 | 100.0 |
| ***36.0*** | ***18.0*** | 100.0 | 100.0 | 100.0 | 100.0 | 100.0 | 100.0 | 100.0 | 100.0 | 100.0 |
| ***42.0*** | ***21.0*** | 100.0 | 100.0 | 100.0 | 100.0 | 100.0 | 100.0 | 100.0 | 100.0 | 100.0 |
| ***48.0*** | ***24.0*** | 100.0 | 100.0 | 100.0 | 100.0 | 100.0 | 100.0 | 100.0 | 100.0 | 100.0 |
| ***54.0*** | ***27.0*** | 100.0 | 100.0 | 100.0 | 100.0 | 100.0 | 100.0 | 100.0 | 100.0 | 100.0 |
| ***60.0*** | ***30.0*** | 100.0 | 100.0 | 100.0 | 100.0 | 100.0 | 100.0 | 100.0 | 100.0 | 100.0 |
| ***66.0*** | ***33.0*** | 100.0 | 100.0 | 100.0 | 100.0 | 100.0 | 100.0 | 100.0 | 100.0 | 99.5 |
| ***72.0*** | ***36.0*** | 100.0 | 100.0 | 100.0 | 100.0 | 100.0 | 100.0 | 100.0 | 100.0 | 97.1 |
| ***78.0*** | ***39.0*** | 100.0 | 100.0 | 100.0 | 100.0 | 100.0 | 100.0 | 100.0 | 100.0 | 95.3 |
| ***84.0*** | ***42.0*** | 100.0 | 100.0 | 100.0 | 100.0 | 100.0 | 100.0 | 100.0 | 100.0 | 94.0 |
| ***90.0*** | ***45.0*** | 100.0 | 100.0 | 100.0 | 100.0 | 100.0 | 100.0 | 100.0 | 100.0 | 93.2 |
| ***96.0*** | ***48.0*** | 100.0 | 100.0 | 100.0 | 100.0 | 100.0 | 100.0 | 100.0 | 100.0 | 93.0 |

NOTES FOR SINGLE WINDOW W/ TRANSOM
AND W/ OUT STEEL REINFORCEMENT

1. THE DESIGN PRESSURES IN THIS CHART ARE FOR THE MULLION ASSEMBLY WITHOUT STEEL REINFORCEMENT AS DESCRIBED HEREIN, SEE BELOW FOR TYPICAL SECTION DETAIL.
2. FOR HORIZONTAL MULL CLIPS IN WOOD FRAMING INSTALLATION USE THREE (3) #10 WOOD SCREWS AT EACH ANCHOR CLIP. MUST BE OF SUFFICIENT LENGTH TO ACHIEVE A 1 1/2" MINIMUM EMBEDMENT INTO FRAMING. SEE SHEET 2 FOR DETAILS.
3. FOR HORIZONTAL MULL CLIPS IN METAL STUD INSTALLATIONS, USE (3) THREE #10 TEK SCREWS, SAE GRADE 5, AT EACH ANCHOR CLIP WITH SUFFICIENT LENGTH TO ACHIEVE AN ENGAGEMENT OF 3 THREADS PAST FRAME MATERIAL.
4. FOR HORIZONTAL MULL CLIPS IN CONCRETE/MASONRY INSTALLATIONS USE (3) THREE 3/16" ITW TAPCONS AT EACH ANCHOR CLIP WITH SUFFICIENT LENGTH TO ACHIEVE A 1 1/4" MINIMUM EMBEDMENT INTO FRAMING. SEE SHEET 2 FOR DETAILS.
5. CHART APPLIES ONLY TO 6100/8100/9100 ALUMINUM EXTRUDED MULLION AS SPECIFIED ABOVE WHEN USED TO MULL WINDOWS ABOVE EACH OTHER.
6. READ WINDOW WIDTH AND MULL SPAN IN INCHES. DESIGN PRESSURE VALUES ON THIS CHART ARE POSITIVE AND NEGATIVE PSF.
7. DESIGN PRESSURE VALUES APPLY TO MULLION WHERE TWO OR MORE WINDOWS ARE LISTED IN A SINGLE OPENING.
8. DESIGN PRESSURE OF RESULTING ASSEMBLY IS THE LESSER OF THE INDIVIDUAL APPROVED PRODUCT OR THAT OF THE MULLION INDICATED IN THE ABOVE CHART.
9. ANCHOR SPACING FROM WINDOW FRAME TO MULLION SHALL BE LIMITED TO THE LESSER OF THROUGH FRAME INSTALLATION O.C. SPACING INDICATED FOR THE INDIVIDUAL APPROVED PRODUCT OR THAT OF THE O.C. SPACING INDICATED ON SHEET 1.
10. REFER TO PER 1885B FOR MORE MULLION SPECIFICATIONS.

***Maximum design pressure capacity chart (psf)***

***6100/8100/9100 Aluminum Horizontal mullion, Twin with Transom***

*Design pressures are limited either by mullion or anchor screw or anchor clip capacity.*

| Height (in) | | Unit width (in) | | | | | | | | | | | | | | | | |
|---|---|---|---|---|---|---|---|---|---|---|---|---|---|---|---|---|---|---|
| Window | Transom | ***24.0*** | ***27.0*** | ***30.0*** | ***33.0*** | ***36.0*** | ***39.0*** | ***42.0*** | ***45.0*** | ***48.0*** | ***54.0*** | ***60.0*** | ***66.0*** | ***72.0*** | ***78.0*** | ***84.0*** | ***90.0*** | ***96.0*** |
| ***24.0*** | ***12.0*** | 100.0 | 100.0 | 100.0 | 100.0 | 100.0 | 100.0 | 100.0 | 100.0 | 100.0 | 99.7 | 87.7 | 78.3 | 70.7 | 64.2 | 55.3 | 48.1 | 40.5 |
| ***30.0*** | ***15.0*** | 100.0 | 100.0 | 100.0 | 100.0 | 100.0 | 100.0 | 100.0 | 100.0 | 97.7 | 84.3 | 73.9 | 65.6 | 59.0 | 51.7 | 44.5 | 38.7 | 32.9 |
| ***36.0*** | ***18.0*** | 100.0 | 100.0 | 100.0 | 100.0 | 100.0 | 100.0 | 100.0 | 92.3 | 85.2 | 73.6 | 64.5 | 57.2 | 51.1 | 43.4 | 37.3 | 32.4 | 27.8 |
| ***42.0*** | ***21.0*** | 100.0 | 100.0 | 100.0 | 100.0 | 100.0 | 98.2 | 89.5 | 82.1 | 75.8 | 65.5 | 57.4 | 51.0 | 44.1 | 37.4 | 32.2 | 28.0 | 24.2 |
| ***48.0*** | ***24.0*** | 100.0 | 100.0 | 100.0 | 100.0 | 98.6 | 89.0 | 81.0 | 74.3 | 68.5 | 59.2 | 51.9 | 46.1 | 38.9 | 33.0 | 28.3 | 24.6 | 21.5 |
| ***54.0*** | ***27.0*** | 100.0 | 100.0 | 100.0 | 100.0 | 90.7 | 81.7 | 74.3 | 68.1 | 62.8 | 54.1 | 47.5 | 41.7 | 34.8 | 29.5 | 25.3 | 22.0 | 19.3 |
| ***60.0*** | ***30.0*** | 100.0 | 100.0 | 100.0 | 94.8 | 84.3 | 75.9 | 68.9 | 63.1 | 58.1 | 50.1 | 43.9 | 37.8 | 31.6 | 26.8 | 23.0 | 19.9 | 17.4 |
| ***66.0*** | ***33.0*** | 100.0 | 100.0 | 100.0 | 89.2 | 79.2 | 71.1 | 64.5 | 58.9 | 54.2 | 46.7 | 40.8 | 34.7 | 28.9 | 24.5 | 21.0 | 18.2 | 15.9 |
| ***72.0*** | ***36.0*** | 100.0 | 100.0 | 97.2 | 84.7 | 75.0 | 67.2 | 60.8 | 55.5 | 51.0 | 43.8 | 38.3 | 32.1 | 26.7 | 22.6 | 19.4 | 16.8 | 14.7 |
| ***78.0*** | ***39.0*** | 100.0 | 100.0 | 93.3 | 81.0 | 71.5 | 63.9 | 57.7 | 52.6 | 48.3 | 41.4 | 36.1 | 29.8 | 24.8 | 21.0 | 18.0 | 15.6 | 13.6 |
| ***84.0*** | ***42.0*** | 100.0 | 100.0 | 90.2 | 77.9 | 68.5 | 61.1 | 55.1 | 50.1 | 45.9 | 39.3 | 34.2 | 27.9 | 23.2 | 19.6 | 16.8 | 14.6 | 12.7 |
| ***90.0*** | ***45.0*** | 100.0 | 100.0 | 87.7 | 75.4 | 66.1 | 58.7 | 52.8 | 48.0 | 43.9 | 37.5 | 32.2 | 26.3 | 21.9 | 18.5 | 15.8 | 13.7 | 12.0 |
| ***96.0*** | ***48.0*** | 100.0 | 100.0 | 85.8 | 73.4 | 64.0 | 56.8 | 50.9 | 46.2 | 42.2 | 35.9 | 30.5 | 24.9 | 20.7 | 17.4 | 14.9 | 12.9 | 11.3 |

NOTES FOR TWIN WINDOW W/TRANSOM AND
W/ OUT STEEL REINFORCEMENT

1. THE DESIGN PRESSURES IN THIS CHART ARE FOR THE MULLION ASSEMBLY WITHOUT STEEL REINFORCEMENT AS DESCRIBED HEREIN, SEE BELOW FOR TYPICAL SECTION DETAIL.
2. FOR HORIZONTAL MULL CLIPS IN WOOD FRAMING INSTALLATION USE THREE (3) #10 WOOD SCREWS AT EACH ANCHOR CLIP. MUST BE OF SUFFICIENT LENGTH TO ACHIEVE A 1 1/2" MINIMUM EMBEDMENT INTO FRAMING. SEE SHEET 2 FOR DETAILS.
3. FOR HORIZONTAL MULL CLIPS IN METAL STUD INSTALLATIONS USE (3) THREE #10 TEK SCREWS, SAE GRADE 5, AT EACH ANCHOR CLIP WITH SUFFICIENT LENGTH TO ACHIEVE AN ENGAGEMENT OF 3 THREADS PAST FRAME MATERIAL.
4. FOR HORIZONTAL MULL CLIPS IN CONCRETE/MASONRY INSTALLATIONS USE (3) THREE 3/16" ITW TAPCONS AT EACH ANCHOR CLIP WITH SUFFICIENT LENGTH TO ACHIEVE A 1 1/4" MINIMUM EMBEDMENT INTO FRAMING. SEE SHEET 2 FOR DETAILS.
5. CHART APPLIES ONLY TO 6100/8100/9100 ALUMINUM EXTRUDED MULLION AS SPECIFIED ABOVE WHEN USED TO MULL WINDOWS ABOVE EACH OTHER.
6. READ WINDOW WIDTH AND MULL SPAN IN INCHES. DESIGN PRESSURE VALUES ON THIS CHART ARE POSITIVE AND NEGATIVE PSF.
7. DESIGN PRESSURE VALUES APPLY TO MULLION WHERE TWO OR MORE WINDOWS ARE LISTED IN A SINGLE OPENING.
8. DESIGN PRESSURE OF RESULTING ASSEMBLY IS THE LESSER OF THE INDIVIDUAL APPROVED PRODUCT OR THAT OF THE MULLION INDICATED IN THE ABOVE CHART.
9. ANCHOR SPACING FROM WINDOW FRAME TO MULLION SHALL BE LIMITED TO THE LESSER OF THROUGH FRAME INSTALLATION O.C. SPACING INDICATED FOR THE INDIVIDUAL APPROVED PRODUCT OR THAT OF THE O.C. SPACING INDICATED ON SHEET 1.
10. REFER TO PER 1885B FOR MORE MULLION SPECIFICATIONS.

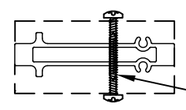

#10 X 1" GR. 5
SELF-DRILLING SCREW.
SEE SHEET 1 FOR SPACING.

## MULLION SECTION DETAIL

**ALUMINUM MULLION: 6063-T6**

STATE OF TEXAS
ALEXIS SPYROU
102957
LICENSED
PROFESSIONAL ENGINEER

2-20-12


PLY GEM WINDOWS
433 N. MAIN ST., PO BOX 559,
ROCKY MOUNT, VA 24151
PH: 540-484-6348 FX: 540-484-6683


TITLE: 6100/8100/9100 AL. MULL DESIGN PRESSURE CHART W/ OUT REINF.


PREPARED BY:
BUILDING DROPS
127 W. FAIRBANKS AVE., STE. 438
WINTER PARK, FL 32789
PH: (407) 644-6957 FX: (407) 644-2366


REVISIONS

| NO. | DESCRIPTION | BY | DATE |
|---|---|---|---|
| | | | |


ALEXIS SPYROU, P.E.
TEXAS P. E. NO. 102957
127 W. FAIRBANKS AVE., STE. 438
WINTER PARK, FL 32789


DATE: 2.15.12
DWN BY: MSS
CHK BY: HFN
SCALE: NTS

DWG #: PGW081

SHEET: 3 OF 4

# DESIGN PRESSURE CHARTS

***Maximum design pressure capacity chart (psf)***

***6100/8100/9100 Aluminum Horizontal mullion with Steel Reinforcement, Twin with Transom***

*Design pressures are limited either by mullion or anchor screw or anchor clip capacity.*

| Height (in) | | Unit width (in) | | | | | | | | | | | | | | | | |
|---|---|---|---|---|---|---|---|---|---|---|---|---|---|---|---|---|---|---|
| Window | Transom | 24.0 | 27.0 | 30.0 | 33.0 | 36.0 | 39.0 | 42.0 | 45.0 | 48.0 | 54.0 | 60.0 | 66.0 | 72.0 | 78.0 | 84.0 | 90.0 | 96.0 |
| 24.0 | 12.0 | 115.0 | 115.0 | 115.0 | 115.0 | 115.0 | 115.0 | 115.0 | 115.0 | 115.0 | 99.7 | 87.7 | 78.3 | 70.7 | 64.5 | 59.3 | 54.8 | 51.0 |
| 30.0 | 15.0 | 115.0 | 115.0 | 115.0 | 115.0 | 115.0 | 115.0 | 115.0 | 105.9 | 97.7 | 84.3 | 73.9 | 65.6 | 59.0 | 53.6 | 49.1 | 45.3 | 42.0 |
| 36.0 | 18.0 | 115.0 | 115.0 | 115.0 | 115.0 | 115.0 | 110.3 | 100.5 | 92.3 | 85.2 | 73.6 | 64.5 | 57.2 | 51.3 | 46.4 | 42.4 | 39.0 | 36.1 |
| 42.0 | 21.0 | 115.0 | 115.0 | 115.0 | 115.0 | 108.6 | 98.2 | 89.5 | 82.1 | 75.8 | 65.5 | 57.4 | 51.0 | 45.7 | 41.4 | 37.7 | 34.6 | 31.9 |
| 48.0 | 24.0 | 115.0 | 115.0 | 115.0 | 110.3 | 98.6 | 89.0 | 81.0 | 74.3 | 68.5 | 59.2 | 51.9 | 46.1 | 41.4 | 37.4 | 34.1 | 31.3 | 28.1 |
| 54.0 | 27.0 | 115.0 | 115.0 | 115.0 | 101.6 | 90.7 | 81.7 | 74.3 | 68.1 | 62.8 | 54.1 | 47.5 | 42.2 | 37.9 | 34.3 | 31.2 | 28.6 | 25.1 |
| 60.0 | 30.0 | 115.0 | 115.0 | 108.0 | 94.8 | 84.3 | 75.9 | 68.9 | 63.1 | 58.1 | 50.1 | 43.9 | 38.9 | 34.9 | 31.6 | 28.9 | 25.9 | 22.7 |
| 66.0 | 33.0 | 115.0 | 115.0 | 102.0 | 89.2 | 79.2 | 71.1 | 64.5 | 58.9 | 54.2 | 46.7 | 40.8 | 36.2 | 32.5 | 29.4 | 26.8 | 23.7 | 20.8 |
| 72.0 | 36.0 | 115.0 | 113.8 | 97.2 | 84.7 | 75.0 | 67.2 | 60.8 | 55.5 | 51.0 | 43.8 | 38.3 | 34.0 | 30.5 | 27.6 | 25.1 | 21.9 | 19.1 |
| 78.0 | 39.0 | 115.0 | 109.9 | 93.3 | 81.0 | 71.5 | 63.9 | 57.7 | 52.6 | 48.3 | 41.4 | 36.1 | 32.0 | 28.7 | 26.0 | 23.4 | 20.3 | 17.8 |
| 84.0 | 42.0 | 115.0 | 106.9 | 90.2 | 77.9 | 68.5 | 61.1 | 55.1 | 50.1 | 45.9 | 39.3 | 34.3 | 30.3 | 27.2 | 24.6 | 21.9 | 19.0 | 16.6 |
| 90.0 | 45.0 | 115.0 | 104.7 | 87.7 | 75.4 | 66.1 | 58.7 | 52.8 | 48.0 | 43.9 | 37.5 | 32.6 | 28.9 | 25.8 | 23.3 | 20.6 | 17.8 | 15.6 |
| 96.0 | 48.0 | 115.0 | 103.1 | 85.8 | 73.4 | 64.0 | 56.8 | 50.9 | 46.2 | 42.2 | 35.9 | 31.2 | 27.6 | 24.6 | 22.2 | 19.4 | 16.8 | 14.7 |

NOTES FOR TWIN WINDOW W/TRANSOM AND W/ STEEL REINFORCEMENT

1. THE DESIGN PRESSURES IN THIS CHART ARE FOR THE MULLION ASSEMBLY WITH STEEL REINFORCEMENT AS DESCRIBED HEREIN, SEE BELOW FOR TYPICAL SECTION DETAIL.
2. FOR HORIZONTAL MULL CLIPS IN WOOD FRAMING INSTALLATION USE THREE (3) #10 WOOD SCREWS AT EACH ANCHOR CLIP. MUST BE OF SUFFICIENT LENGTH TO ACHIEVE A 1 1/2" MINIMUM EMBEDMENT INTO FRAMING. SEE SHEET 2 FOR DETAILS.
3. FOR HORIZONTAL MULL CLIPS IN METAL STUD INSTALLATIONS, USE (3) THREE #10 TEK SCREWS, SAE GRADE 5, AT EACH ANCHOR CLIP WITH SUFFICIENT LENGTH TO ACHIEVE AN ENGAGEMENT OF 3 THREADS PAST FRAME MATERIAL.
4. FOR HORIZONTAL MULL CLIPS IN CONCRETE/MASONRY INSTALLATIONS USE (3) THREE 3/16" ITW TAPCONS AT EACH ANCHOR CLIP WITH SUFFICIENT LENGTH TO ACHIEVE A 1 1/4" MINIMUM EMBEDMENT INTO FRAMING. SEE SHEET 2 FOR DETAILS.
5. CHART APPLIES ONLY TO 6100/8100/9100 ALUMINUM EXTRUDED MULLION AS SPECIFIED ABOVE WHEN USED TO MULL WINDOWS ABOVE EACH OTHER.
6. READ WINDOW WIDTH AND MULL SPAN IN INCHES. DESIGN PRESSURE VALUES ON THIS CHART ARE POSITIVE AND NEGATIVE PSF.
7. DESIGN PRESSURE VALUES APPLY TO MULLION WHERE TWO OR MORE WINDOWS ARE LISTED IN A SINGLE OPENING.
8. DESIGN PRESSURE OF RESULTING ASSEMBLY IS THE LESSER OF THE INDIVIDUAL APPROVED PRODUCT OR THAT OF THE MULLION INDICATED IN THE ABOVE CHART.
9. ANCHOR SPACING FROM WINDOW FRAME TO MULLION SHALL BE LIMITED TO THE LESSER OF THROUGH FRAME INSTALLATION O.C. SPACING INDICATED FOR THE INDIVIDUAL APPROVED PRODUCT OR THAT OF THE O.C. SPACING INDICATED ON SHEET 1.
10. REFER TO PER 1885B FOR MORE MULLION SPECIFICATIONS.

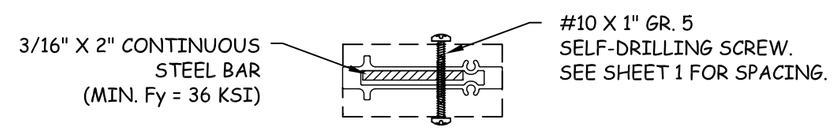


## MULLION SECTION DETAIL

**ALUMINUM MULLION: 6063-T6**

**STEEL REINFORCEMENT: MIN. Fy = 36 KSI**

STATE OF TEXAS
ALEXIS SPYROU
102957
LICENSED
PROFESSIONAL ENGINEER

2-20-12


PLY GEM WINDOWS
433 N. MAIN ST., PO BOX 559,
ROCKY MOUNT, VA 24151
PH: 540-484-6348 FX: 540-484-6683


TITLE: 6100/8100/9100 AL. MULL DESIGN PRESSURE CHART WITH REINF.


PREPARED BY:
BUILDING DROPS
127 W. FAIRBANKS AVE., STE. 438
WINTER PARK, FL 32789
PH: (407) 644-6957 FX: (407) 644-2366


REVISIONS

| NO. | DESCRIPTION | BY | DATE |
|---|---|---|---|
| | | | |


ALEXIS SPYROU, P.E.
TEXAS P. E. NO. 102957
127 W. FAIRBANKS AVE., STE. 438
WINTER PARK, FL 32789


DATE: 2.15.12 | DWN BY: MSS | CHK BY: HFN | SCALE: NTS

DWG #: PGW081

SHEET: 4 OF 4