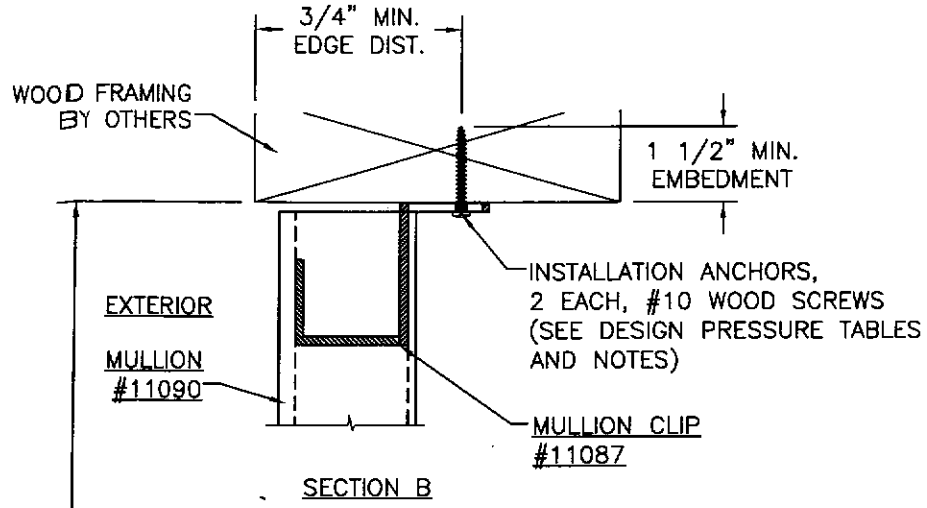

SECTION B

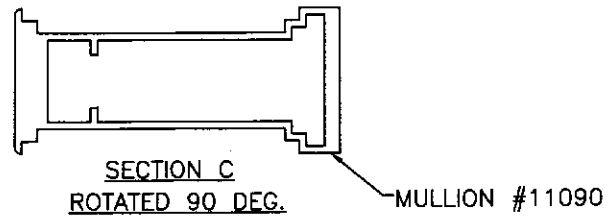

SECTION C
ROTATED 90 DEG.

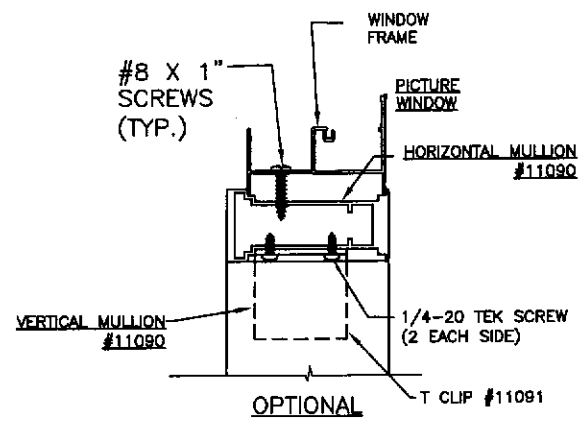

OPTIONAL
PICTURE WINDOW
TO MULL ABOVE
TWIN ATTACHMENT
DETAIL

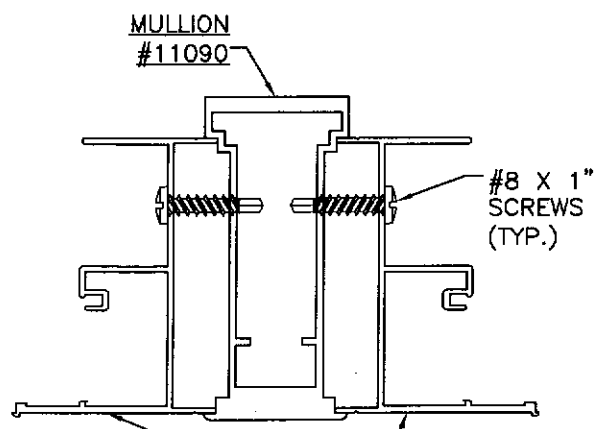

SECTION D
WINDOW TO MULL
ATTACHMENT DETAIL

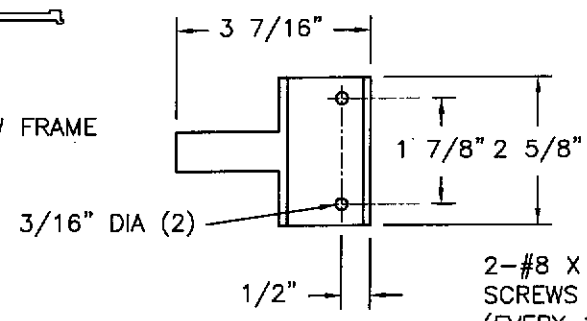

MULLION CLIP
#11087

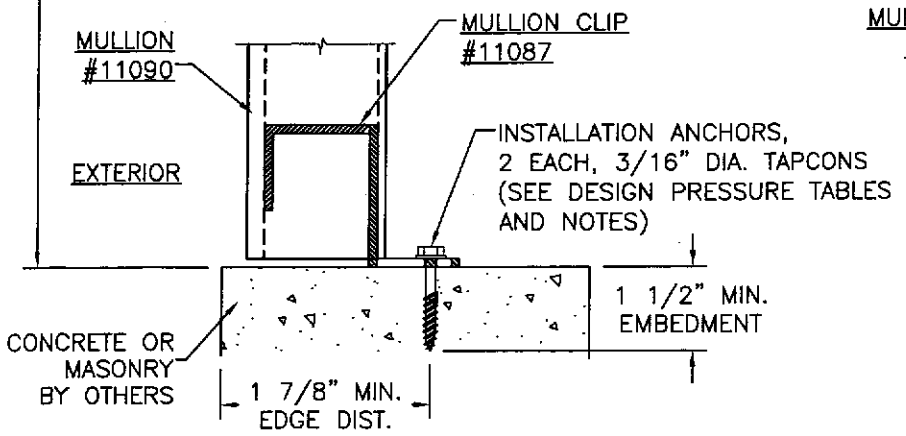

SECTION A

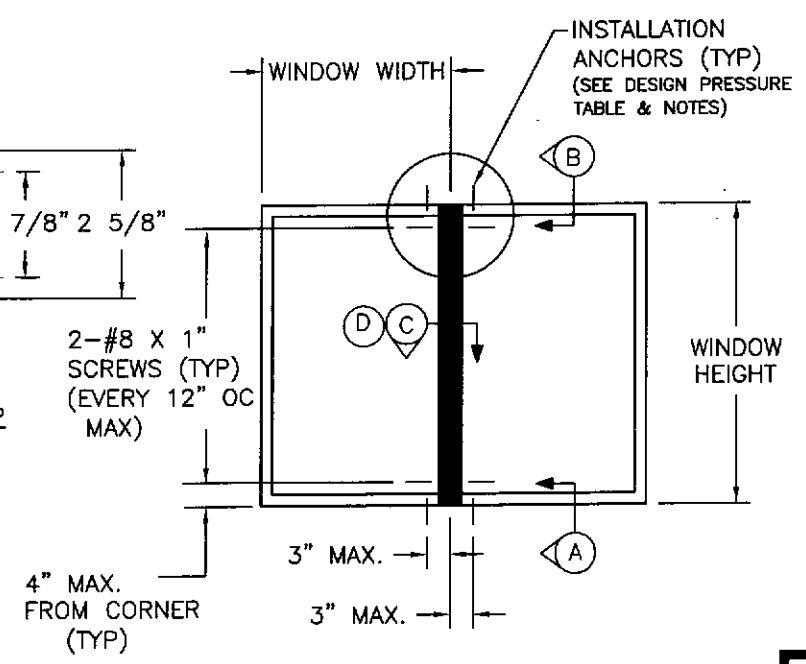

WINDOWS MULLED SIDE BY SIDE
W/4700 TWINNING MULL #11090
EXTERIOR ELEVATION

DESIGN PRESSURE TABLE

Height (in)	MULLION 11090 - WINDOW WIDTH (in)											
	18.0	**21.0**	**24.0**	**27.0**	**30.0**	**33.0**	**36.0**	**39.0**	**42.0**	**45.0**	**48.0**	**53.0**
24.0	75.0	75.0	75.0	75.0	75.0	75.0	75.0	75.0	75.0	75.0	75.0	75.0
30.0	75.0	75.0	75.0	75.0	75.0	75.0	75.0	75.0	75.0	75.0	75.0	75.0
36.0	75.0	75.0	75.0	75.0	75.0	75.0	75.0	75.0	75.0	75.0	75.0	75.0
42.0	75.0	75.0	75.0	75.0	75.0	75.0	75.0	75.0	75.0	75.0	75.0	75.0
48.0	75.0	75.0	75.0	75.0	75.0	75.0	75.0	75.0	75.0	75.0	75.0	75.0
54.0	75.0	75.0	75.0	75.0	75.0	75.0	75.0	75.0	75.0	75.0	75.0	75.0
60.0	75.0	75.0	75.0	75.0	75.0	75.0	71.8	67.9	64.7	62.2	60.2	58.0
62.0	75.0	75.0	75.0	75.0	75.0	71.3	66.7	62.9	59.9	57.4	55.5	53.1
66.0	75.0	75.0	75.0	73.7	67.3	62.2	58.0	54.6	51.7	49.4	47.6	45.2
72.0	75.0	75.0	68.4	61.4	55.9	51.5	47.9	44.9	42.4	40.4	38.6	36.4
84.0	61.6	53.2	46.9	42.1	38.2	35.1	32.6	30.5	28.7	27.2	26.0	24.3

NOTE:
ENGINEERED MULLIONS FOR LARGE MISSILE IMPACT ARE ALLOWED UNDER ASTM E1886-05 & E1996-05 UNDER THE LIMITATION THAT THE MULLIONS ARE LOCATED IN "WIND ZONE 3" OR LESS WHERE THE WIND ZONES DO NOT EXCEED 130MPH.

MULLION SPECIFICATION NOTES:
1) CHART APPLIES ONLY TO 4700 TWINNING MULL #11090 WHEN WINDOWS ARE MULLED SIDE BY SIDE.
2) READ WINDOW WIDTH AND MULL HEIGHT IN INCHES.
3) DESIGN PRESSURE VALUES ON THIS CHART ARE POSITIVE AND NEGATIVE PSF.
4) DESIGN PRESSURE VALUES APPLY TO MULLION WHERE TWO WINDOWS ARE MULLED IN A SINGLE OPENING.
5) REFER TO REPORT #1440 FOR MORE MULLION SPECIFICATIONS.
6) WINDOWS MUST BE ANCHORED TO MULLION PER 4700 F TWINNING MULLION CROSS SECTIONS DRAWING.

NOTE:
1) THE PRODUCT SHOWN HEREIN IS DESIGNED AND MANUFACTURED TO COMPLY WITH THE 2006 INTERNATIONAL RESIDENTIAL CODE (IRC), SECTION R613.9.
2) MULLION INSTALLATION DETAILS APPLY TO ALUMINUM TUBE MULLION, DIE NUMBER 11090, WHEN USED TO MULL WINDOWS SIDE BY SIDE.
3) APPROVED IMPACT PROTECTIVE SYSTEM IS REQUIRED ON THIS PRODUCT IN AREAS REQUIRING IMPACT RESISTANCE.
4) USE 3/16" DIAMETER TAPCON ANCHOR OF SUFFICIENT LENGTH TO ACHIEVE MINIMUM EMBEDMENT OF 1 7/8" INTO MASONRY OR CONCRETE. 3/16" DIAMETER TAPCON MUST HAVE A 1 7/8" MINIMUM EDGE DISTANCE FROM EDGE OF MASONRY OR CONCRETE.
5) USE #10 WOOD SCREW OF SUFFICIENT LENGTH TO ACHIEVE MINIMUM EMBEDMENT OF 1 1/2" INTO WOOD FRAMING.

SYM	REVISION	DATE	BY

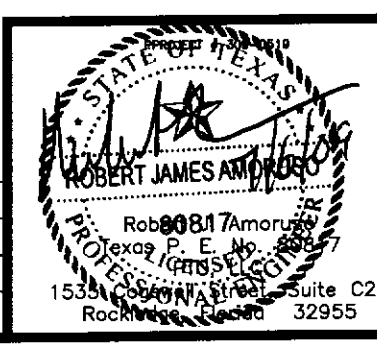

Robert J. Amoroso
Texas P. E. No. 88817
PTC, LLC
1535 Cocoa Street, Suite C25
Rockledge, Florida 32955

ALENCO WINDOWS
BRYAN, TEXAS

TITLE: SERIES 4700 TWINNING VERTICAL MULLION
MULLION INSTALLATION DETAILS

PREPARED BY: PTC, LLC
Phone 321.690.1788 Fax 321.690.1789

DRN:	DATE:
PW	07/06/09
SCALE: N.T.S.	DWG. NO: ALEN0023
REV:	SHEET: 1 OF 1

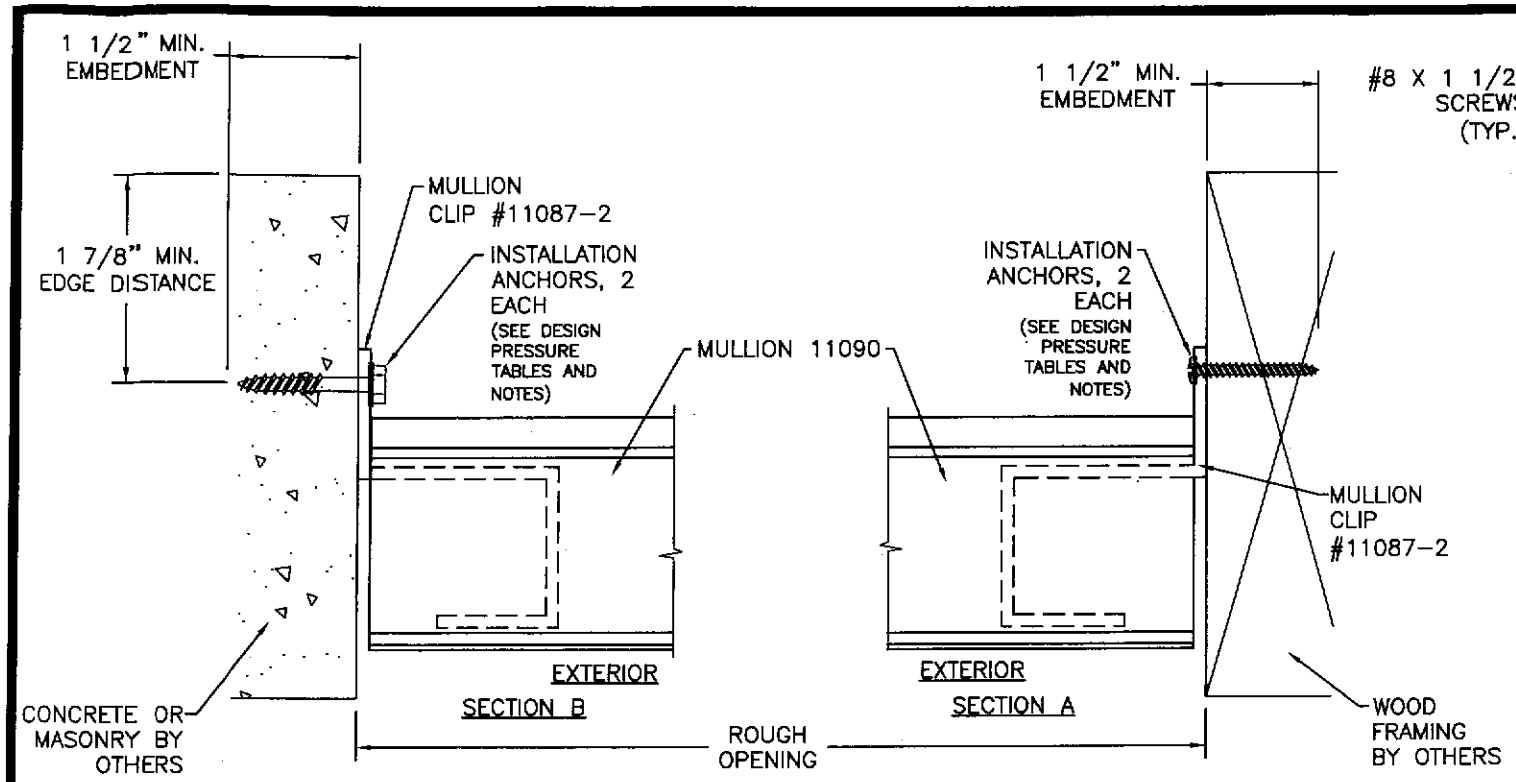

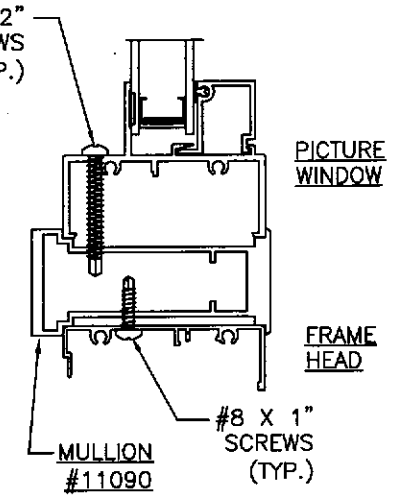

SECTION E
TRANSOM MULL. OVER WINDOW ATTACHMENT DETAIL

DESIGN PRESSURE TABLES

Height (in)		MULLION 11090 - WINDOW WIDTH (in) TRANSOM OVER SINGLE WINDOW											
Window	Transom	18.0	21.0	24.0	27.0	30.0	33.0	36.0	39.0	42.0	45.0	48.0	53.0
24.0	12.0	75.0	75.0	75.0	75.0	75.0	75.0	75.0	75.0	75.0	75.0	75.0	75.0
30.0	15.0	75.0	75.0	75.0	75.0	75.0	75.0	75.0	75.0	75.0	75.0	75.0	75.0
36.0	18.0	75.0	75.0	75.0	75.0	75.0	75.0	75.0	75.0	75.0	75.0	75.0	75.0
42.0	21.0	75.0	75.0	75.0	75.0	75.0	75.0	75.0	75.0	75.0	75.0	75.0	75.0
48.0	24.0	75.0	75.0	75.0	75.0	75.0	75.0	75.0	75.0	75.0	75.0	75.0	70.8
54.0	27.0	75.0	75.0	75.0	75.0	75.0	75.0	75.0	75.0	75.0	75.0	75.0	68.1
60.0	30.0	75.0	75.0	75.0	75.0	75.0	75.0	75.0	75.0	75.0	75.0	75.0	66.1
62.0	31.0	75.0	75.0	75.0	75.0	75.0	75.0	75.0	75.0	75.0	75.0	75.0	65.5
66.0	33.0	75.0	75.0	75.0	75.0	75.0	75.0	75.0	75.0	75.0	75.0	75.0	64.5
72.0	36.0	75.0	75.0	75.0	75.0	75.0	75.0	75.0	75.0	75.0	75.0	75.0	63.1
84.0	42.0	75.0	75.0	75.0	75.0	75.0	75.0	75.0	75.0	75.0	75.0	73.6	61.2

Height (in)		MULLION 11090 WINDOW WIDTH (in) TRANSOM OVER DOUBLE WINDOW										
Window	Transom	36.0	42.0	48.0	54.0	60.0	66.0	72.0	78.0	84.0	90.0	96.0	106.0
24.0	12.0	75.0	75.0	75.0	75.0	75.0	75.0	75.0	68.7	63.1	52.2	42.9	31.7
30.0	15.0	75.0	75.0	75.0	75.0	75.0	69.9	62.8	57.1	52.3	42.4	34.8	25.7
36.0	18.0	75.0	75.0	75.0	75.0	68.7	61.0	54.6	49.4	44.5	35.9	29.4	21.7
42.0	21.0	75.0	75.0	75.0	69.7	61.2	54.3	48.7	44.1	38.4	31.3	25.6	18.8
48.0	24.0	75.0	75.0	73.0	63.0	55.3	49.1	44.1	39.4	33.9	27.8	22.7	16.7
54.0	27.0	75.0	75.0	66.9	57.7	50.6	44.9	40.3	35.3	30.3	25.1	20.5	15.0
60.0	30.0	75.0	73.4	61.9	53.3	46.7	41.5	37.2	32.0	27.4	22.9	18.7	13.7
62.0	31.0	75.0	71.8	60.4	52.0	45.6	40.5	36.3	31.0	26.6	22.2	18.2	13.3
66.0	33.0	75.0	68.7	57.8	49.7	43.5	38.6	34.6	29.3	25.1	21.0	17.2	12.6
72.0	36.0	75.0	64.8	54.3	46.7	40.8	36.2	31.9	27.0	23.1	19.5	15.9	11.7
84.0	42.0	73.0	58.7	48.9	41.9	36.5	32.3	27.8	23.5	20.1	17.0	13.9	10.2

NOTE:
ENGINEERED MULLIONS FOR LARGE MISSILE IMPACT ARE ALLOWED UNDER ASTM E1886-05 & E1996-05 UNDER THE LIMITATION THAT THE MULLIONS ARE LOCATED IN "WIND ZONE 3" OR LESS WHERE THE WIND ZONES DO NOT EXCEED 130MPH.

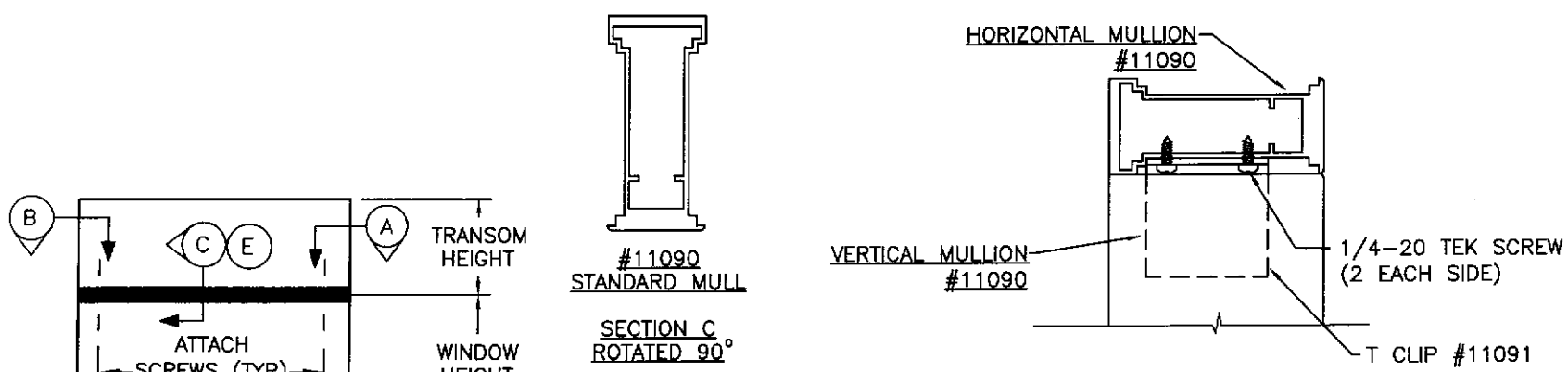

TRANSOM MULLED OVER WINDOW W/MULLION 11090 EXTERIOR ELEVATION

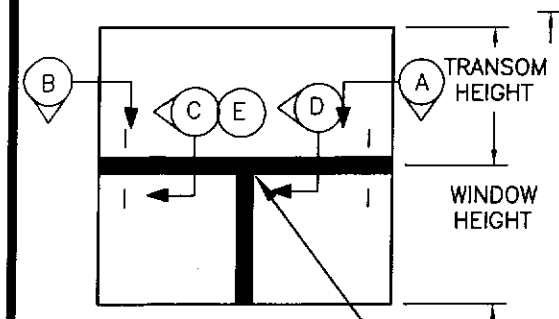

TRANSOM MULLED W/MULLION #11090 EXTERIOR ELEVATION

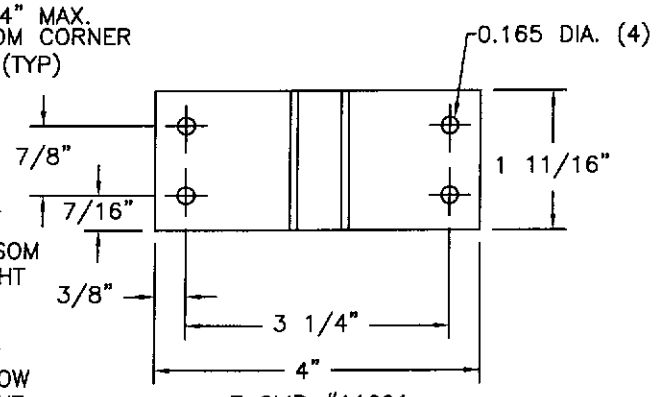

T CLIP #11091
USED TO MULL VERTICAL MULLION TO HORIZONTAL MULLION

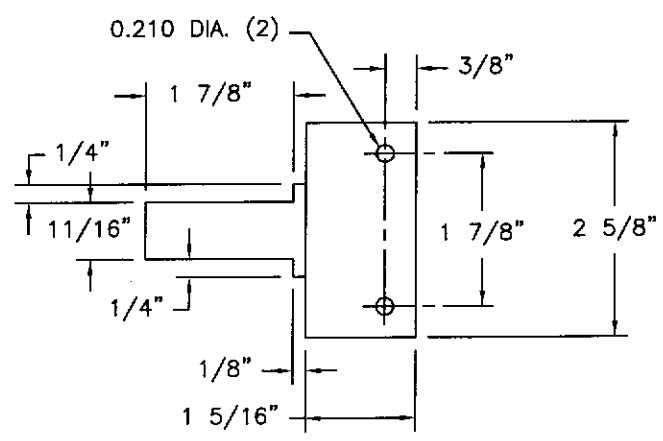

MULLION CLIP #11087-2

NOTE:
1) THE PRODUCT SHOWN HEREIN IS DESIGNED AND MANUFACTURED TO COMPLY WITH THE 2006 INTERNATIONAL RESIDENTIAL CODE (IRC), SECTION R613.9.
2) MULLION INSTALLATION DETAILS APPLY TO ALUMINUM TUBE MULLION, #11090, WHEN USED TO MULL FIN WINDOWS OVER EACH OTHER.
3) APPROVED IMPACT PROTECTIVE SYSTEM IS REQUIRED ON THIS PRODUCT IN AREAS REQUIRING IMPACT RESISTANCE.
4) USE 3/16" DIAMETER TAPCON ANCHOR OF SUFFICIENT LENGTH TO ACHIEVE MINIMUM EMBEDMENT OF 1 1/2" INTO MASONRY OR CONCRETE. 3/16" DIAMETER TAPCON MUST HAVE A 1 7/8" MINIMUM EDGE DISTANCE FROM EDGE OF MASONRY OR CONCRETE.
5) USE #10 WOOD SCREW OF SUFFICIENT LENGTH TO ACHIEVE MINIMUM EMBEDMENT OF 1 1/2" INTO WOOD FRAMING.

MULLION SPECIFICATION NOTES:
1) CHART APPLIES ONLY TO MULLION 11090 WHEN USED TO MULL FIN TYPE TRANSOM MULLED OVER FIN TYPE WINDOW.
2) READ WINDOW WIDTH AND MULL SPAN IN INCHES.
3) DESIGN PRESSURE VALUES ON THIS CHART ARE POSITIVE AND NEGATIVE PSF.
4) DESIGN PRESSURE VALUES APPLY TO MULLION WHERE TWO OR MORE WINDOWS ARE LISTED IN A SINGLE OPENING.
5) REFER TO REPORT #1441 & 1442 FOR MORE MULLION SPECIFICATIONS.

SYM	REVISION	DATE	BY

STATE OF TEXAS
PROJECT # 300.0319
ROBERT JAMES AMORUSO
80817
LICENSED PROFESSIONAL ENGINEER
Robert J. Amoruso
Texas P.E. No. 80817
07/06/09

1535 Cogswell Street, Suite C25
Rockledge, Florida 32955

ALENCO WINDOWS
BRYAN, TEXAS

TITLE: SERIES 4700 STANDARD FIN HORIZONTAL MULLION MULLION INSTALLATION DETAILS

PREPARED BY: PTC, LLC
Phone 321.690.1788 Fax 321.690.1789

DRN:	DATE:
PW	07/06/09
SCALE: N.T.S.	DWG. NO: ALEN0024
REV:	SHEET: 1 OF 1