Alside BECAUSE LIFE IS FOR LIVING®

3773 STATE ROAD, CUYAHOGA FALLS, OH 44223

3100 STRUCTURAL MULLION

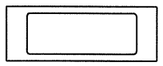

MULLION

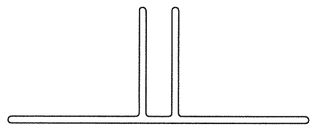

GOAL POST STYLE BRACKET
(AT HEAD AND SILL)

GENERAL NOTES:

THE ALUMINUM STRUCTURAL MULLIONS DESCRIBED HEREIN COMPLY WITH THE 2006 INTERNATIONAL RESIDENTIAL CODE (IRC) SUBJECT TO THE FOLLOWING CONDITIONS:

1. MULLION ANCHOR EMBEDMENT TO BASE MATERIAL SHALL BE BEYOND WALL DRESSING OR STUCCO.
2. SEPARATE PRODUCT APPROVALS FOR EACH ALSIDE GLAZING PRODUCT USED WITH THESE MULLIONS MUST BE SUBMITTED ALONG WITH THIS MULLION PRODUCT APPROVAL.
3. FOR ANCHORING GLAZING PRODUCTS TO THE MULLION, ANCHOR QUANTITY AND SPACING SHALL BE AS SHOWN IN EACH INDIVIDUAL GLAZING PRODUCT APPROVAL AND SUBSTITUTING 1/4"–14 SELF DRILLING TAPPING SCREWS FOR THE FASTENERS SHOWN IN THE INDIVIDUAL GLAZING PRODUCT APPROVAL.
4. ANY CONDITIONS NOT COVERED IN THIS EVALUATION ARE SUBJECT TO SEPARATE ENGINEERING EVALUATION.
5. APPROVED ALSIDE TWIN UNITS OR APPROVED ALSIDE SINGLES CAN BE USED IN MULLION CONFIGURATIONS. THE VERTICAL AND HORIZONTAL MULLION CONFIGURATIONS CAN BE COMBINED TO MULL MULTIPLE SINGLE UNITS TOGETHER.
6. THE DESIGN PRESSURE RATING OF THE ASSEMBLY SHALL BE THE LESSER OF THE LOAD CAPACITY OF THE MULLION AS DETERMINED USING THIS APPROVAL OR THE DESIGN PRESSURE RATING OF THE INDIVIDUAL GLAZING PRODUCTS USED.
7. BOUNDING BOX DIMENSIONS FOR GEOMETRIC TRANSOM SHAPES MUST BE EQUAL TO OR LESS THAN THE RECTANGULAR TRANSOM DIMENSIONS SHOWN HEREIN.

SUPPORTING DOCUMENTS & EVIDENCE

1. THIS PRODUCT HAS BEEN ENGINEERED FOLLOWING ACCEPTED ENGINEERING PRACTICE CONFORMING TO THE REQUIREMENTS IN SECTION 613.9 OF THE IRC.

TABLE OF CONTENTS

SHEET #	DESCRIPTION
1	TYPICAL ELEVATIONS & GENERAL NOTES
2	MULLION LOAD TABLE FOR WOOD SCREW ANCHORS
3	MULLION LOAD TABLE FOR CONCRETE SCREW ANCHORS
4	MULLION SECTION & ANCHOR DETAILS

TYPICAL MULLION CONFIGURATIONS

Documents Prepared By:
R.W. BUILDING CONSULTANTS, INC.
P.O. Box 230 Valrico, FL 33595
Phone No.: 813-659-9197

5-26-09
ALLEN GEZELMAN, P.E. TEXAS #101678

PRODUCT: STRUCTURAL MULLION
PART OR ASSEMBLY: TYPICAL ELEVATION AND GENERAL NOTES

REVISIONS

NO.	DATE		BY
1	5/21/09	ADD WINDOW TO MULLION CONNECTION DETAIL	AL

DATE: 12/11/08
SCALE: NTS
DWG. BY: DWS
CHK. BY: LFS
DRAWING NO.: TX–4000
SHEET 1 OF 4

© 2009 R.W. BUILDING CONSULTANTS INC.

R:\A - Projects\Project Folders\Proj 1301-1400\PF 1309\TEXAS - TDI\TDI-3100 Structural Mullion\TX-4000\TX-4000-1.dwg, Model

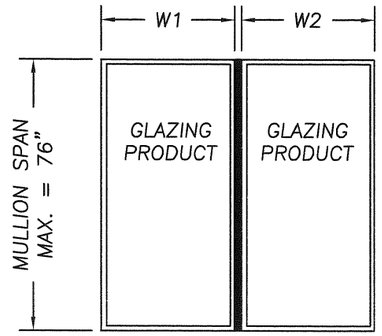

$$\text{TRIBUTARY WIDTH} = \frac{W1 + W2}{2}$$

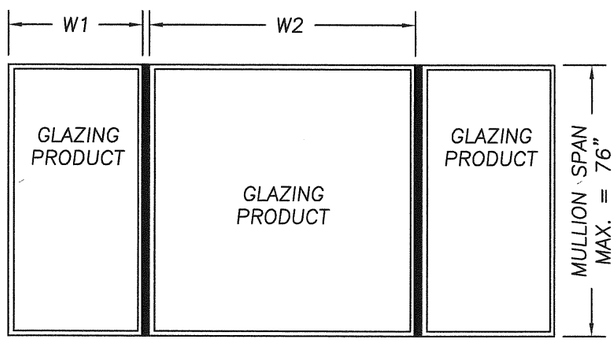

3100 STRUCTURAL MULLION LOAD TABLE (PSF)

WOOD SCREW ANCHORS	TRIBUTARY WIDTH												
MULLION SPAN	28"	30"	32"	34"	36"	38"	40"	42"	44"	46"	48"	50"	54"
76"	64.43	60.62	57.29	54.36	51.77	49.45	47.35	45.42	43.65	42.00	40.48	39.06	36.51
72"	76.25	71.78	67.87	64.43	61.39	58.64	56.14	53.83	51.71	49.75	47.93	46.24	43.20
70"	83.26	78.39	74.15	70.41	67.10	64.08	61.33	58.81	56.48	54.33	52.34	50.49	47.15
68"	91.15	85.85	81.23	77.16	73.52	70.20	67.17	64.40	61.84	59.48	57.29	55.26	51.60
66"	100.08	94.28	89.23	84.78	80.76	77.11	73.77	70.71	67.89	65.29	62.88	60.64	56.61
64"	110.20	103.86	98.33	93.42	88.97	84.92	81.23	77.85	74.73	71.86	69.20	66.73	62.28
62"	120.00	114.78	108.69	103.23	98.30	93.81	89.71	85.96	82.51	79.32	76.38	73.64	68.71
60"	120.00	120.00	120.00	114.44	108.95	103.95	99.39	95.22	91.38	87.84	84.57	81.53	76.06
58"	120.00	120.00	120.00	120.00	120.00	115.58	110.49	105.83	101.55	97.60	93.95	90.56	84.46
56"	120.00	120.00	120.00	120.00	120.00	120.00	120.00	118.05	112.94	108.03	103.53	99.38	92.02
54"	120.00	120.00	120.00	120.00	120.00	120.00	120.00	120.00	120.00	116.18	111.34	106.88	98.96
52"	120.00	120.00	120.00	120.00	120.00	120.00	120.00	120.00	120.00	120.00	120.00	115.26	106.72
50"	120.00	120.00	120.00	120.00	120.00	120.00	120.00	120.00	120.00	120.00	120.00	120.00	115.43
48"	120.00	120.00	120.00	120.00	120.00	120.00	120.00	120.00	120.00	120.00	120.00	120.00	120.00
46"	120.00	120.00	120.00	120.00	120.00	120.00	120.00	120.00	120.00	120.00	120.00	120.00	120.00
44"	120.00	120.00	120.00	120.00	120.00	120.00	120.00	120.00	120.00	120.00	120.00	120.00	120.00
42"	120.00	120.00	120.00	120.00	120.00	120.00	120.00	120.00	120.00	120.00	120.00	120.00	120.00
40"	120.00	120.00	120.00	120.00	120.00	120.00	120.00	120.00	120.00	120.00	120.00	120.00	120.00
38"	120.00	120.00	120.00	120.00	120.00	120.00	120.00	120.00	120.00	120.00	120.00	120.00	120.00
36"	120.00	120.00	120.00	120.00	120.00	120.00	120.00	120.00	120.00	120.00	120.00	120.00	120.00
34"	120.00	120.00	120.00	120.00	120.00	120.00	120.00	120.00	120.00	120.00	120.00	120.00	120.00
32"	120.00	120.00	120.00	120.00	120.00	120.00	120.00	120.00	120.00	120.00	120.00	120.00	120.00
30"	120.00	120.00	120.00	120.00	120.00	120.00	120.00	120.00	120.00	120.00	120.00	120.00	120.00
28"	120.00	120.00	120.00	120.00	120.00	120.00	120.00	120.00	120.00	120.00	120.00	120.00	120.00
26"	120.00	120.00	120.00	120.00	120.00	120.00	120.00	120.00	120.00	120.00	120.00	120.00	120.00
24"	120.00	120.00	120.00	120.00	120.00	120.00	120.00	120.00	120.00	120.00	120.00	120.00	120.00

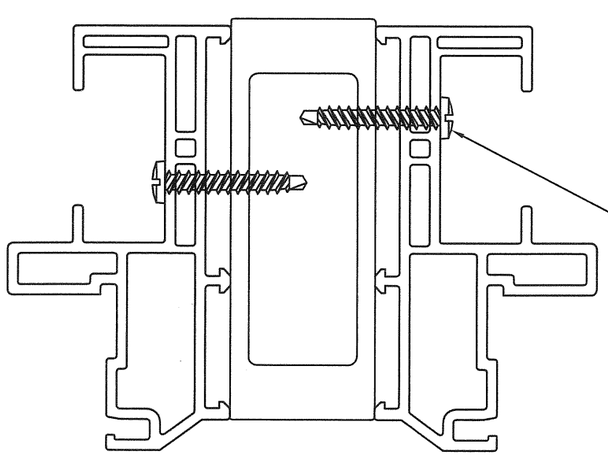

FOR ANCHORING GLAZING PRODUCTS TO THE MULLION, ANCHOR QUANTITY AND SPACING SHALL BE AS SHOWN IN EACH INDIVIDUAL GLAZING PRODUCT APPROVAL AND SUBSTITUTING 1/4"–14 SELF DRILLING TAPPING SCREWS FOR THE FASTENERS SHOWN IN THE INDIVIDUAL GLAZING PRODUCT APPROVAL. A MINIMUM OF 3 THREADS MUST PROTRUDE THROUGH THE WALL OF THE MULLION. THIS SECTION VIEW IS SHOWN FOR ILLUSTRATIVE PURPOSES; OTHER FRAME SECTIONS OF TDI APPROVED WINDOWS BY ALSIDE WINDOWS CAN BE USED IN THIS FASHION.

INSTRUCTIONS FOR USE OF THE MULLION LOAD TABLE:

1. DETERMINE THE DESIGN LOAD REQUIREMENT PER CHAPTER 6 OF THE CURRENT VERSION OF ASCE 7 FOR THE PARTICULAR OPENING.
2. FOR THE PARTICULAR OPENING, DETERMINE THE TRIBUTARY WIDTH AND MULLION SPAN. REFERENCE THE SKETCHES ON THIS SHEET FOR MULLION SPAN AND TRIBUTARY WIDTH DETERMINATION.
3. IN THE FIRST COLUMN OF THE TABLE, LOCATE THE MULLION SPAN. IN THE FIRST ROW OF THE TABLE, LOCATE THE TRIBUTARY WIDTH. AT THE INTERSECTION OF THE ROW CONTAINING THE MULLION SPAN AND THE COLUMN CONTAINING THE TRIBUTARY WIDTH, READ THE MULLION LOAD RATING GIVEN IN PSF. THE MULLION LOAD RATING MUST BE EQUAL TO OR GREATER THAN THE DESIGN LOAD REQUIREMENT DETERMINED IN STEP 1 ABOVE.

Documents Prepared By: TEXAS BUILDING CONSULTANTS, INC.
P.O. Box 230 Valrico, FL. 33595
Phone No.: 813.659.8197
ALLEN GEZELMAN, P.E. TEXAS R.E. #101678

5-26-09

PRODUCT: STRUCTURAL MULLION

PART OR ASSEMBLY: MULLION LOAD TABLE FOR WOOD SCREW ANCHORS

NO.	DATE	BY
1	5/21/09	AL

REVISIONS: ADD WINDOW TO MULLION CONNECTION DETAIL

DATE: 12/11/08
SCALE: NTS
DWG. BY: DWS
CHK. BY: LFS
DRAWING NO.: TX-4000
SHEET 2 OF 4

© 2009 R.W. BUILDING CONSULTANTS INC.

R:\A - Projects\Project Folders\Proj 1301-1400\PF 1309\TEXAS - TDI\TDI-3100 Structural Mullion\TX-4000\TX-4000-2.dwg, Model

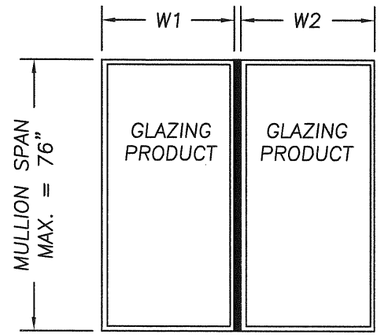

$$\text{TRIBUTARY WIDTH} = \frac{W1 + W2}{2}$$

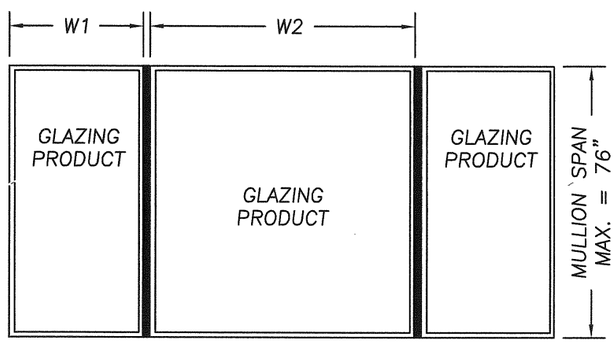

3100 STRUCTURAL MULLION LOAD TABLE (PSF)

CONCRETE SCREW ANCHORS	TRIBUTARY WIDTH												
MULLION SPAN	28"	30"	32"	34"	36"	38"	40"	42"	44"	46"	48"	50"	54"
76"	64.43	60.62	57.29	54.36	51.77	49.45	47.35	45.42	43.65	42.00	40.48	39.06	36.51
72"	76.25	71.78	67.87	64.43	61.39	58.64	56.14	53.83	51.71	49.75	47.93	46.24	43.20
70"	83.26	78.39	74.15	70.41	67.10	64.08	61.33	58.81	56.48	54.33	52.34	50.49	47.15
68"	91.15	85.85	81.23	77.16	73.52	70.20	67.17	64.40	61.84	59.48	57.29	55.26	51.60
66"	100.08	94.28	89.23	84.78	80.76	77.11	73.77	70.71	67.89	65.29	62.88	60.64	56.64
64"	108.62	103.44	98.33	93.42	88.97	84.92	81.23	77.85	74.73	71.86	69.20	66.73	62.28
62"	113.14	107.85	103.27	99.10	95.25	91.69	88.38	85.31	82.44	79.32	76.38	73.64	68.71
60"	118.06	112.64	107.85	103.44	99.39	95.64	92.16	88.93	85.91	83.10	80.46	77.98	73.46
58"	120.00	117.83	112.77	108.12	103.83	99.88	96.21	92.81	89.63	86.67	83.90	81.30	76.55
56"	120.00	120.00	118.06	113.14	108.62	104.44	100.57	96.98	93.64	90.51	87.59	84.86	79.87
54"	120.00	120.00	120.00	118.57	113.78	109.36	105.27	101.48	97.95	94.66	91.58	88.69	83.44
52"	120.00	120.00	120.00	120.00	119.36	114.68	110.35	106.34	102.61	99.13	95.88	92.84	87.29
50"	120.00	120.00	120.00	120.00	120.00	120.00	115.86	111.61	107.66	103.98	100.54	97.32	91.47
48"	120.00	120.00	120.00	120.00	120.00	120.00	120.00	117.33	113.14	109.24	105.60	102.19	96.00
46"	120.00	120.00	120.00	120.00	120.00	120.00	120.00	120.00	119.13	114.98	111.12	107.50	100.94
44"	120.00	120.00	120.00	120.00	120.00	120.00	120.00	120.00	120.00	120.00	117.15	113.31	106.34
42"	120.00	120.00	120.00	120.00	120.00	120.00	120.00	120.00	120.00	120.00	120.00	119.69	112.27
40"	120.00	120.00	120.00	120.00	120.00	120.00	120.00	120.00	120.00	120.00	120.00	120.00	118.80
38"	120.00	120.00	120.00	120.00	120.00	120.00	120.00	120.00	120.00	120.00	120.00	120.00	120.00
36"	120.00	120.00	120.00	120.00	120.00	120.00	120.00	120.00	120.00	120.00	120.00	120.00	120.00
34"	120.00	120.00	120.00	120.00	120.00	120.00	120.00	120.00	120.00	120.00	120.00	120.00	120.00
32"	120.00	120.00	120.00	120.00	120.00	120.00	120.00	120.00	120.00	120.00	120.00	120.00	120.00
30"	120.00	120.00	120.00	120.00	120.00	120.00	120.00	120.00	120.00	120.00	120.00	120.00	120.00
28"	120.00	120.00	120.00	120.00	120.00	120.00	120.00	120.00	120.00	120.00	120.00	120.00	120.00
26"	120.00	120.00	120.00	120.00	120.00	120.00	120.00	120.00	120.00	120.00	120.00	120.00	120.00
24"	120.00	120.00	120.00	120.00	120.00	120.00	120.00	120.00	120.00	120.00	120.00	120.00	120.00

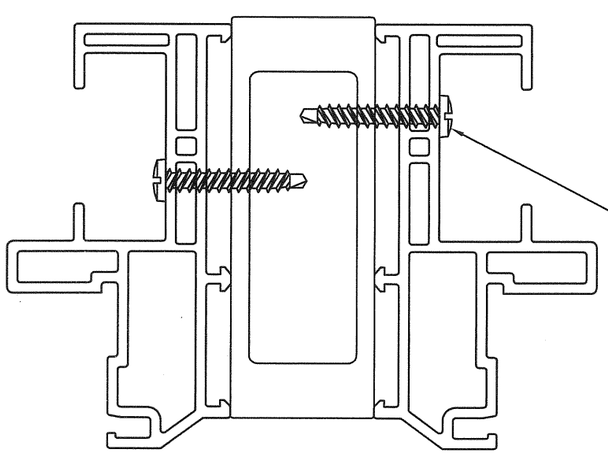

FOR ANCHORING GLAZING PRODUCTS TO THE MULLION, ANCHOR QUANTITY AND SPACING SHALL BE AS SHOWN IN EACH INDIVIDUAL GLAZING PRODUCT APPROVAL AND SUBSTITUTING 1/4"–14 SELF DRILLING TAPPING SCREWS FOR THE FASTENERS SHOWN IN THE INDIVIDUAL GLAZING PRODUCT APPROVAL. A MINIMUM OF 3 THREADS MUST PROTRUDE THROUGH THE WALL OF THE MULLION. THIS SECTION VIEW IS SHOWN FOR ILLUSTRATIVE PURPOSES; OTHER FRAME SECTIONS OF TDI APPROVED WINDOWS BY ALSIDE WINDOWS CAN BE USED IN THIS FASHION.

INSTRUCTIONS FOR USE OF THE MULLION LOAD TABLE:

1. DETERMINE THE DESIGN LOAD REQUIREMENT PER CHAPTER 6 OF THE CURRENT VERSION OF ASCE 7 FOR THE PARTICULAR OPENING.
2. FOR THE PARTICULAR OPENING, DETERMINE THE TRIBUTARY WIDTH AND MULLION SPAN. REFERENCE THE SKETCHES ON THIS SHEET FOR MULLION SPAN AND TRIBUTARY WIDTH DETERMINATION.
3. IN THE FIRST COLUMN OF THE TABLE, LOCATE THE MULLION SPAN. IN THE FIRST ROW OF THE TABLE, LOCATE THE TRIBUTARY WIDTH. AT THE INTERSECTION OF THE ROW CONTAINING THE MULLION SPAN AND THE COLUMN CONTAINING THE TRIBUTARY WIDTH, READ THE MULLION LOAD RATING GIVEN IN PSF. THE MULLION LOAD RATING MUST BE EQUAL TO OR GREATER THAN THE DESIGN LOAD REQUIREMENT DETERMINED IN STEP 1 ABOVE.

Documents Prepared by:
R.W. BUILDING CONSULTANTS, INC.
P.O. Box 230 Valrico FL 33595
Phone No.: 813.659.9197
STATE OF TEXAS
5.26.09
ALLEN GEZELMAN, P.E. TEXAS P.E. #101678

PRODUCT: STRUCTURAL MULLION

PART OR ASSEMBLY: MULLION LOAD TABLE FOR CONCRETE SCREW ANCHORS

REVISIONS

NO.	DATE	BY
1	5/21/09	AL

ADD WINDOW TO MULLION CONNECTION DETAIL

DATE: 12/11/08
SCALE: NTS
DWG. BY: DWS
CHK. BY: LFS
DRAWING NO.: TX-4000
SHEET 3 OF 4

© 2009 R.W. BUILDING CONSULTANTS INC.

R:\A - Projects\Project Folders\Proj 1301-1400\PF 1309\TEXAS - TDI\TDI-3100 Structural Mullion\TX-4000\TX-4000-3.dwg, Model

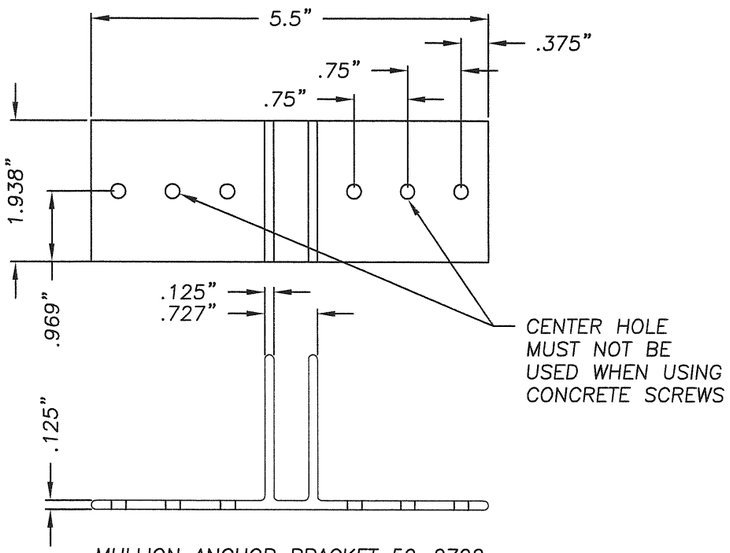

MULLION ANCHOR BRACKET 50-2722
MAT'L: 6063-T6

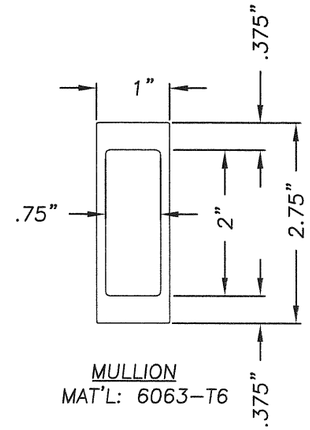

MULLION
MAT'L: 6063-T6

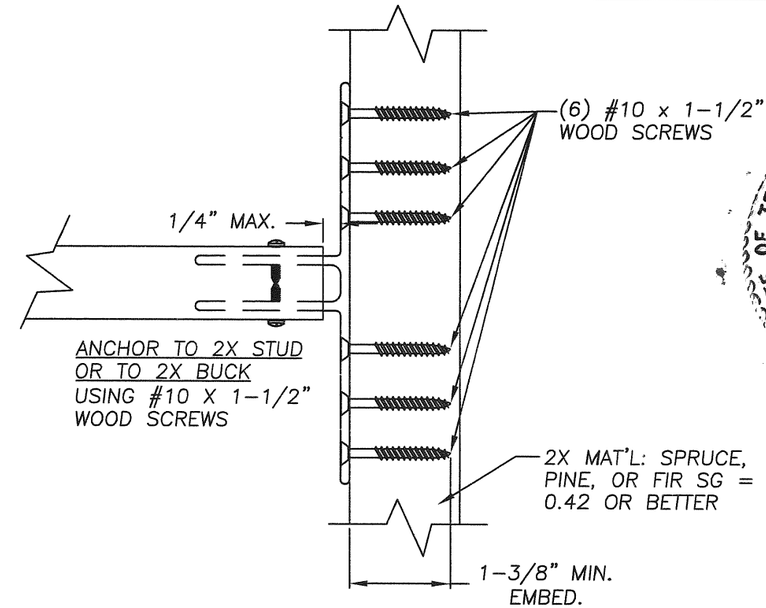

ANCHOR TO 2X STUD OR TO 2X BUCK
USING #10 X 1-1/2" WOOD SCREWS

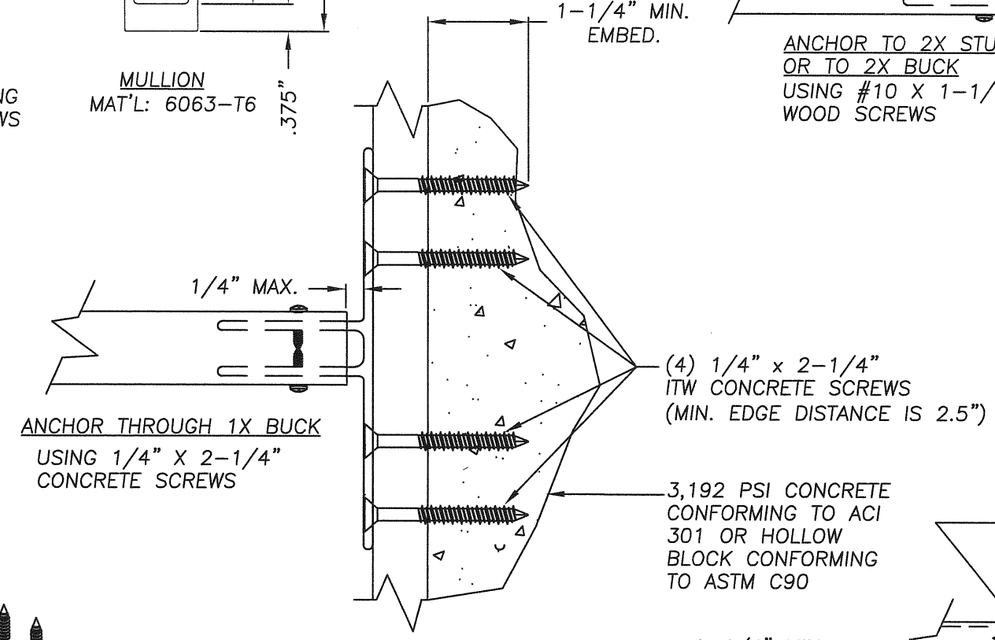

ANCHOR THROUGH 1X BUCK
USING 1/4" X 2-1/4" CONCRETE SCREWS

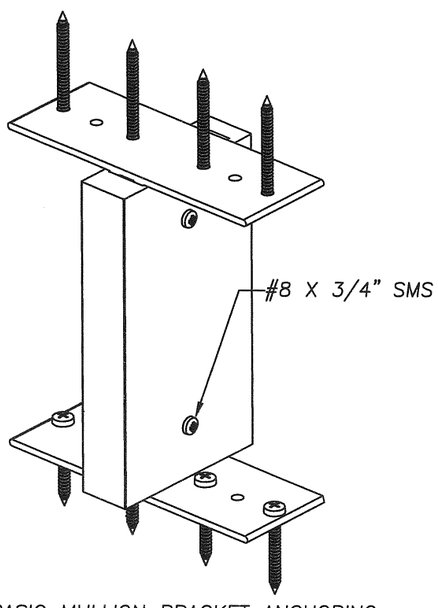

BASIC MULLION BRACKET ANCHORING
FOR CONCRETE SCREW CONNECTIONS AND SMS SCREW (MULL TO MULL) CONNECTIONS

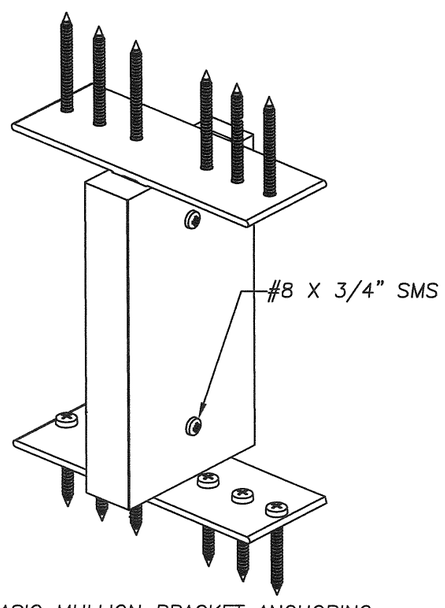

BASIC MULLION BRACKET ANCHORING
FOR WOOD SCREW APPLICATIONS

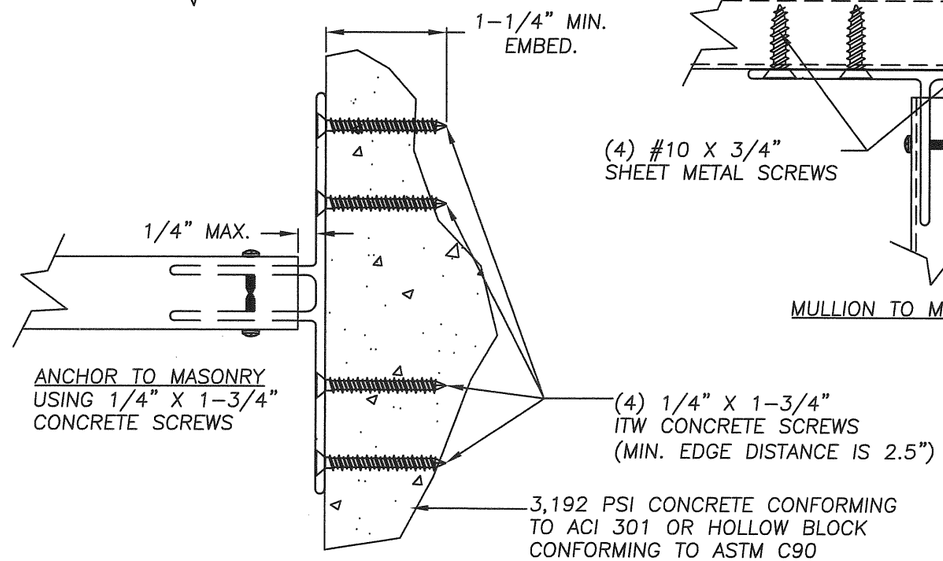

ANCHOR TO MASONRY
USING 1/4" X 1-3/4" CONCRETE SCREWS

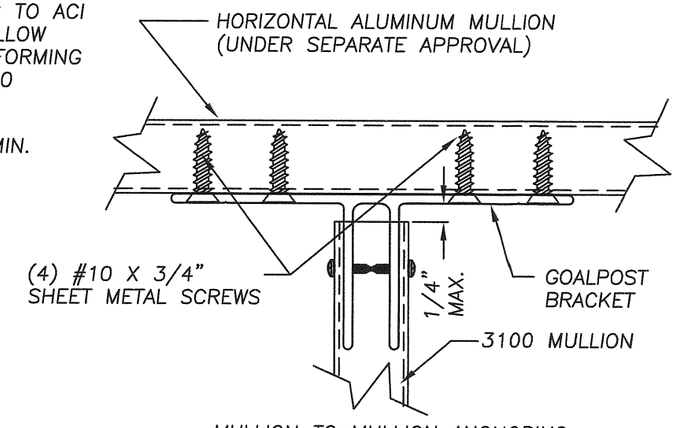

MULLION TO MULLION ANCHORING

Documents Prepared By:
R.W. BUILDING CONSULTANTS, INC.
P.O. Box 27595 Dallas, Texas 75227
Phone No. 214.659.9197 Fax 214.659.9198
ALLEN D. GEZELMAN
ALLEN GEZELMAN, P.E. TEXAS P.E. LIC. #101678
5-26-09

PRODUCT: STRUCTURAL TRANSOM

PART OR ASSEMBLY: MULLION SECTION & ANCHOR DETAILS

NO.	DATE	REVISIONS	BY
1	5/21/09	ADD WINDOW TO MULLION CONNECTION DETAIL	AL

DATE: 12/11/08
SCALE: NTS
DWG. BY: DWS
CHG.. BY: LFS
DRAWING NO.: TX-4000
SHEET 4 OF 4

© 2009 R.W. BUILDING CONSULTANTS INC.

R:\A - Projects\Project Folders\Proj 1301-1400\PF 1309\TEXAS - TDI\TDI-3100 Structural Mullion\TX-4000\TX-4000-4.dwg, Model