Wayne-Dalton Corp.
P.O. Box 67 Mt. Hope, OH 44660
(888) 827-3667
www.wayne-dalton.com

WINDLOAD POST
MODELS
5120/5140/6100/9100/9400/9600
INSTALLATION INSTRUCTIONS

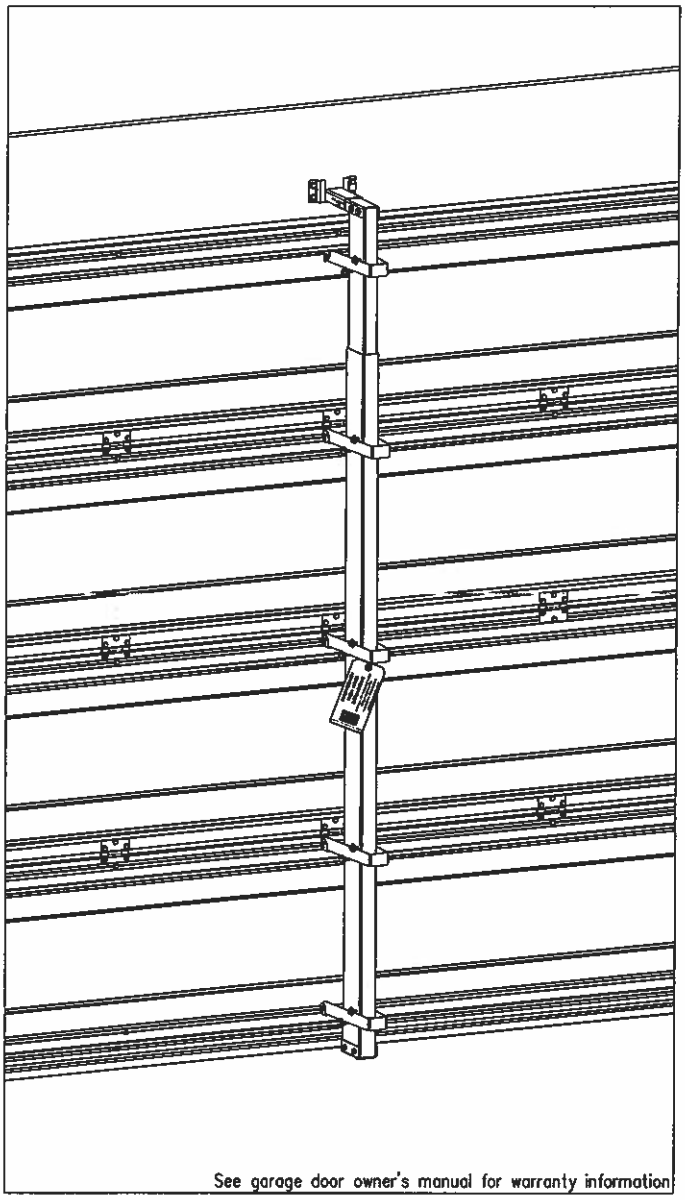

IMPORTANT NOTICE!

READ THE ENCLOSED INSTRUCTIONS CAREFULLY BEFORE INSTALLING THIS WIND LOAD POST. PAY CLOSE ATTENTION TO ALL WARNING LABELS AND NOTES. THIS MANUAL SHOULD BE ATTACHED TO THE WALL IN CLOSE PROXIMITY TO THE WIND LOAD POST.

© Copyright 2006 Wayne-Dalton Corp.

Part No. 319040 P1

WIND LOAD POST

INSTALLATION INSTRUCTIONS

STEP 1:
ATTACH THE HEADER LOCK BRACKET TO THE HEADER USING THE (4) 5/16"x1-5/8" LAG SCREWS PROVIDED AS SHOWN IN FIGURE 1. THE HEADER LOCK BRACKET SHOULD BE IN LINE WITH THE INTERMEDIATE HINGES WHERE THE POST IS TO BE INSTALLED AND LOCATED SUCH THAT THE BOTTOM OF THE BRACKET IS APPROXIMATELY 2-1/2" ABOVE THE TOP OF THE DOOR.
NOTE: DRYWALL OR ANY OTHER SACRIFICIAL MATERIAL COVERING THE HEADER MUST BE REMOVED PRIOR TO INSTALLING THE HEADER LOCK BRACKET AND REPLACED WITH THE SAME THICKNESS OF WOOD. IF THIS PROCESS IS REQUIRED, THE LENGTH OF THE LAG SCREWS MUST BE INCREASED ACCORDINGLY TO INCLUDE THE THICKNESS OF THE WOOD SO THAT A MINIMUM OF 1-1/2" OF LAG SCREW PENETRATION INTO THE HEADER IS MAINTAINED.

STEP 2:
ALIGN THE LARGE DIAMETER HOLE IN THE TOP PLATE EXTENSION WITH THE THIRD HOLE IN THE TOP LOCK PLATE AS SHOWN IN FIGURE 1 FOR MODELS 5120/5140/9100/9400/9600 OR THE MIDDLE HOLE AS SHOWN IN FIGURE 2 FOR MODEL 6100 AND BOLT TOGETHER WITH (1) 5/16-18x2-1/2" HEX BOLT AND NUT. ALIGN THE ASSEMBLY OVER THE TOP OF THE INNER POST AND SECURE WITH (4) 5/16-12x1" SELF DRILLING SCREWS THROUGH THE HOLES PROVIDED IN THE TOP LOCK PLATE. SLIDE THE OPPOSITE END OF THE INNER POST INTO ONE END OF THE OUTER POST.

STEP 3:
PLACE THE POST ASSEMBLY FROM STEP 2 INTO POSITION BY LOWERING THE TOP PLATE EXTENSION INTO THE NOTCH IN THE HEADER LOCK BRACKET UNTIL THE TOP PLATE EXTENSION SEATS IN THE BOTTOM OF THE NOTCH. ALLOW THE OUTER POST TO SLIDE DOWN THE INNER POST UNTIL THE BOTTOM OF THE OUTER POST RESTS ON THE FLOOR. PLUMB THE POST ASSEMBLY.

STEP 4:
ENSURING THE POST ASSEMBLY IS PLUMB, TRACE THE OUTLINE OF THE BOTTOM OF THE OUTER POST ON THE FLOOR. REMOVE THE POST ASSEMBLY AND SET ASIDE UNTIL STEP 5. LOCATE THE CENTER OF THE TRACED OUTLINE BY CONNECTING THE CORNERS TO FORM AN 'X'. AT THE INTERSECTION OF THE 'X', DRILL A 5/8" DIAMETER HOLE A MINIMUM OF 3-1/2" DEEP INTO THE FLOOR. CLEAN DUST OUT OF HOLE.

STEP 5:
ASSEMBLE THE BOTTOM LOCK PLATE BY SLIDING (1) 1/2-13x3-1/2" BOLT DOWN THROUGH THE TOP THE BRACKET AND SECURING WITH THE HEX NUT FROM BELOW. ATTACH THE BOTTOM LOCK PLATE TO THE BOTTOM OF THE OUTER POST WITH (4) 5/16-12x1" SELF DRILLING SCREWS AS SHOWN IN FIGURE 3.

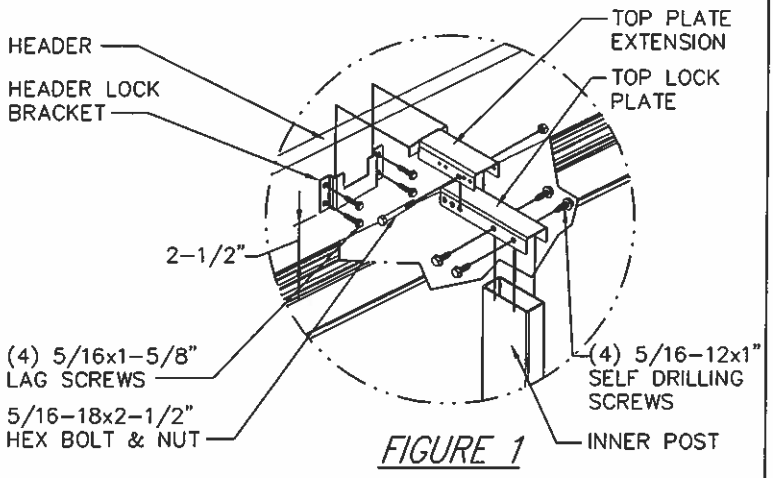

FIGURE 1
MODELS 5120/5140/9400/9600

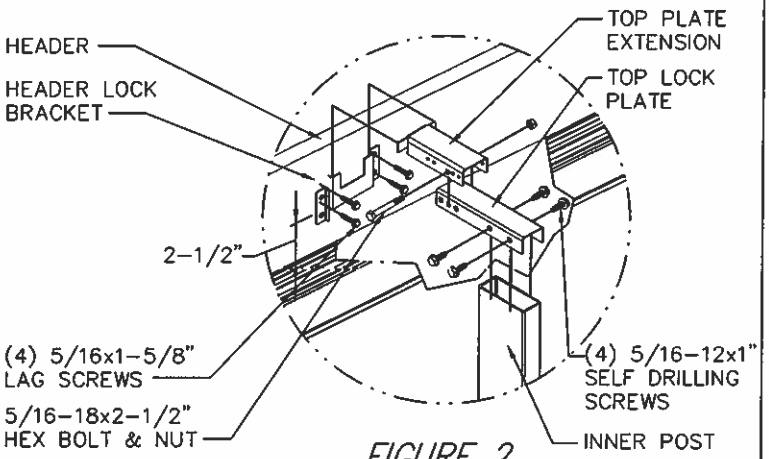

FIGURE 2
MODEL 6100

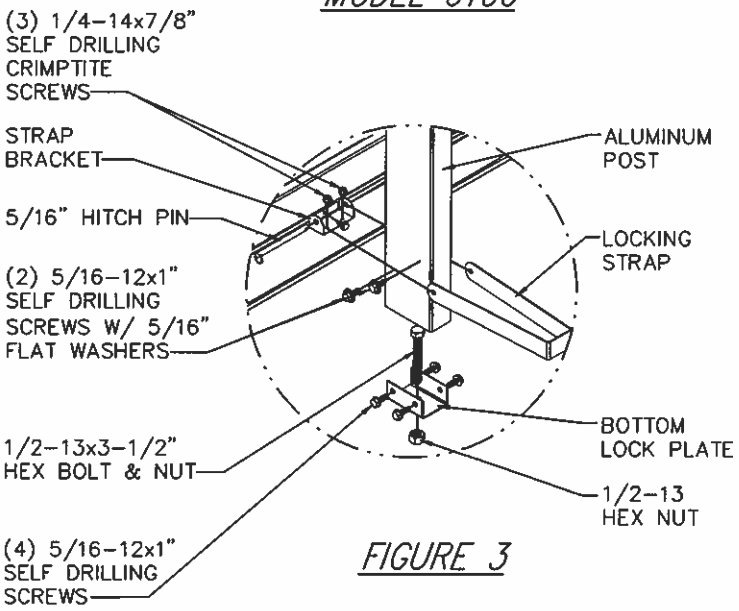

FIGURE 3

WIND LOAD POST

INSTALLATION INSTRUCTIONS

STEP 6:
PLACE THE POST ASSEMBLY INTO POSITION BY LOWERING THE TOP PLATE EXTENSION INTO THE NOTCH IN THE HEADER LOCK BRACKET UNTIL THE TOP PLATE EXTENSION SEATS IN THE BOTTOM OF THE NOTCH. ALLOWING THE OUTER POST TO SLIDE DOWN THE INNER POST, INSERT THE 1/2-13x3-1/2" BOLT AT THE BOTTOM OF THE OUTER POST INTO THE HOLE IN THE FLOOR. ENSURE THE BOLT IS FULLY INSERTED INTO THE FLOOR. THE NUT ON THE UNDERSIDE OF THE BOTTOM LOCK PLATE MUST REST ON THE FLOOR.

STEP 7:
ATTACH THE STRAP BRACKETS TO THE TOP SIDE OF THE U-BARS WITH (3) 1/4-14x7/8" SELF DRILLING CRIMPTITE SCREWS EACH (1) THROUGH THE HOLE IN THE STRAP BRACKET AND THE HOLE IN THE U-BAR AND HINGE AND (2) VERTICALLY INTO THE U-BAR AS SHOWN IN FIGURE 4. EXCEPTION: THE STRAP BRACKET LOCATED ON THE VERY TOP U-BAR MUST BE MOUNTED ON THE UNDERSIDE OF THE STRUT. LAY THE LOCKING STRAPS SIDE BY SIDE AND LOCATE THE SHORT STRAP. BEGINNING WITH THE SHORT STRAP AT THE TOP STRAP BRACKET, PLACE THE STRAP OVER THE POST AS SHOWN IN FIGURE 4. ALIGN THE HOLES IN THE ENDS OF THE STRAP WITH THE HOLES IN THE STRAP BRACKET AND INSERT A 5/16" HITCH PIN AS SHOWN. RAISE THE BACK OF THE STRAP UNTIL THE STRAP IS PERPENDICULAR TO THE POST. CONNECT THE STRAP TO THE POST WITH (1) 5/16-12x1" SELF DRILLING SCREW AND FLAT WASHER 1/4" ABOVE THE STRAP ON THE GARAGE SIDE OF THE POST AND (1) 5/16-12x1" SELF DRILLING SCREW AND FLAT WASHER 1/4" BELOW THE STRAP ON THE DOOR SIDE OF THE POST AS SHOWN. DO NOT TIGHTEN THE SCREWS AGAINST THE STRAP. REPEAT FOR THE REMAINING STRAPS.

NOTE: THE STRAP IS DESIGNED TO SLIDE FREELY BETWEEN THE SCREWS ALLOWING MOVEMENT OF THE DOOR RELATIVE TO THE POST. DO NOT PLACE THE SCREWS THROUGH THE STRAP OR TIGHTEN THE SCREWS TOO TIGHT RESTRICTING MOVEMENT.

AFTER ALL OF THE STRAPS HAVE BEEN INSTALLED, CHECK THE POST TO MAKE SURE IT IS SECURE BY LIFTING UP ON THE POST. IF THE POST RAISES OUT OF THE HEADER LOCK BRACKET, CHECK THE LOCATION OF THE SCREWS ABOVE AND BELOW THE STRAPS. THE GARAGE SIDE SCREWS MUST BE LOCATED ABOVE THE STRAP AS SHOWN IN THE FIGURE 5.

STORAGE INSTRUCTIONS AND DECAL INSTALLATION CONTINUED ON PAGE 4

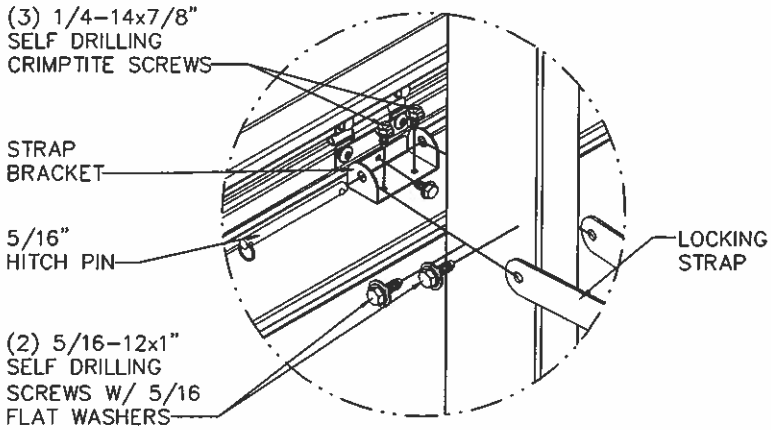

FIGURE 4

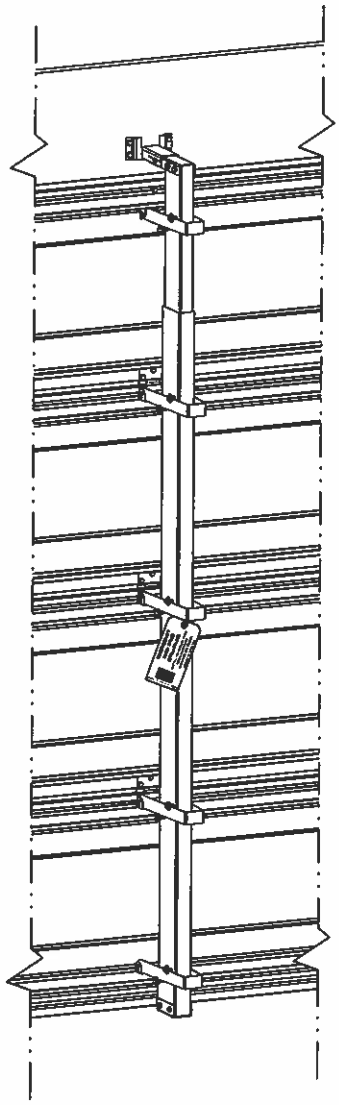

COMPLETED INSTALLATION ON (4) SECTION DOOR

FIGURE 5

WIND LOAD POST

INSTALLATION INSTRUCTIONS

SECURING POSTS FOR STORAGE

STEP 1:
LOCATE A CONVENIENT LOCATION AS CLOSE TO THE DOOR AS POSSIBLE AND MOUNT A HEADER LOCK BRACKET TO THE WALL SUCH THAT THE DISTANCE BETWEEN THE BOTTOM OF THE HEADER LOCK BRACKET AND THE FLOOR IS 4" GREATER THAN THE DISTANCE BETWEEN THE FLOOR AND THE BOTTOM OF THE HEADER LOCK BRACKET MOUNTED OVER THE DOOR. THE HEADER LOCK BRACKET FOR STORAGE SHALL BE MOUNTED WITH A MINIMUM OF (2) 5/16"x1-5/8" LAG SCREWS (ONE EACH SIDE) INTO SOLID WOOD. MASONRY ANCHORS MAY BE SUBSTITUTED FOR MOUNTING DIRECTLY TO MASONRY OR CONCRETE. PROVIDE WOOD BLOCKING ADEQUATELY SECURED TO STRUCTURE AS REQUIRED FOR OTHER SUBSTRATES.

STEP 2:
MOUNT A STRAP BRACKET TO THE WALL IN LINE WITH THE HEADER LOCK BRACKET SUCH THAT THE DISTANCE BETWEEN THE CENTERLINE OF THE HOLE IN THE STRAP BRACKET AND THE FLOOR IS 4" GREATER THAN THE DISTANCE BETWEEN THE CENTERLINE OF THE HOLE IN THE STRAP BRACKET ON THE DOOR AND THE FLOOR WHEN THE DOOR IS FULLY CLOSED. THE STRAP BRACKET FOR STORAGE SHALL BE MOUNTED WITH (2) 5/16"x1-5/8" LAG SCREWS INTO SOLID WOOD. MASONRY ANCHORS MAY BE SUBSTITUTED FOR MOUNTING DIRECTLY TO MASONRY OR CONCRETE. PROVIDE WOOD BLOCKING ADEQUATELY SECURED TO STRUCTURE AS REQUIRED FOR OTHER SUBSTRATES.

STEP 3:
PLACE THE POST INTO THE STORAGE POSITION BY LOWERING THE TOP PLATE EXTENSION INTO THE NOTCH IN THE HEADER LOCK BRACKET UNTIL THE TOP PLATE EXTENSION SEATS IN THE BOTTOM OF THE NOTCH. SECURE THE BOTTOM LOCKING STRAP TO THE STRAP BRACKET USING THE 5/16" HITCH PIN. PLACE ALL REMAINING HITCH PINS INTO THE REMAINING LOCKING STRAPS FOR STORAGE. INSERT THE PLASTIC PLUG INTO THE HOLE IN THE FLOOR.

ATTACHING THE INSTALLATION DECALS

AFTER INSTALLATION IS COMPLETE, LOCATE AN OBVIOUSLY VISIBLE LOCATION ON THE INSIDE OF THE GARAGE DOOR AND THE POST AND PLACE THE PROVIDED INSTALLATION LABELS AND TAG ONTO THE DOOR AND POST FOR FUTURE REFERENCE - REFER TO FIGURE 6.

IMPORTANT
LABELS AND TAG MUST BE ATTACHED TO BOTH DOOR AND POST.

1. APPLIED BY INSTALLER - ONE (1) WIND LOAD PSF LABEL PER DOOR.

2. APPLIED BY INSTALLER - ONE (1) WIND LOAD POST INSTALLATION INSTRUCTIONS LABEL TO BE APPLIED TO INSIDE OF DOOR, NEAR END OF SECOND SECTION.

3. APPLIED BY INSTALLER - ONE (1) EMERGENCY HIGH WIND SITUATIONS TAG TO BE APPLIED TO POST(S) WHEN STORED ON WALL FOR CONSTANT REMINDER TO CONSUMER.

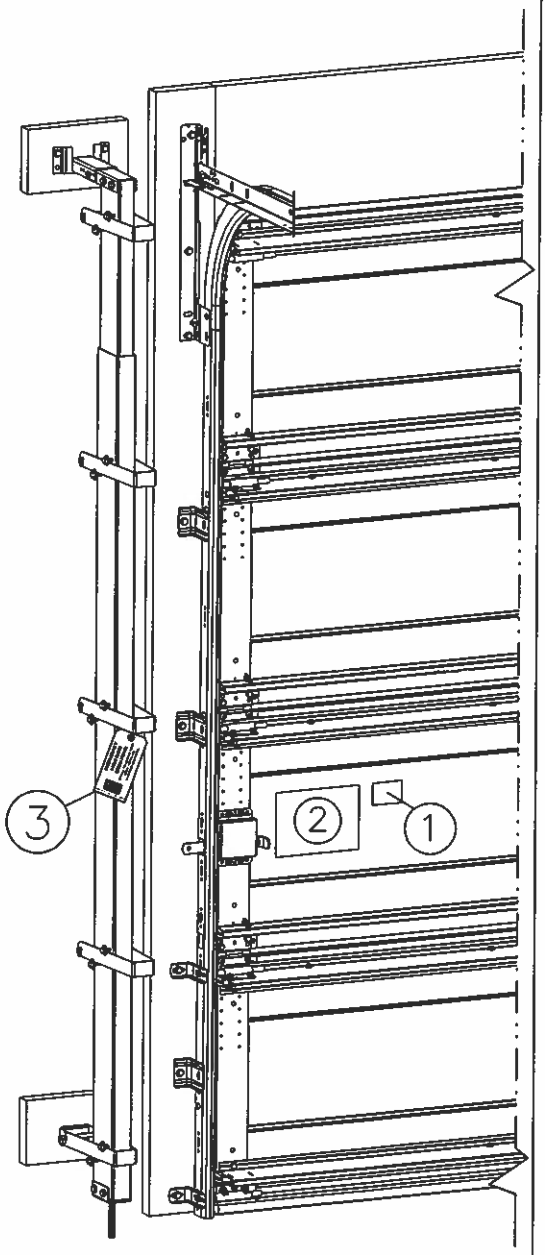

FIGURE 6