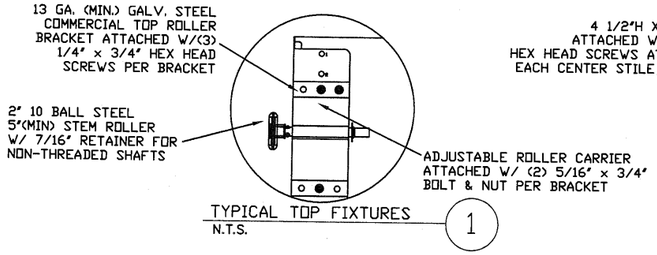

TYPICAL TOP FIXTURES (1)
N.T.S.

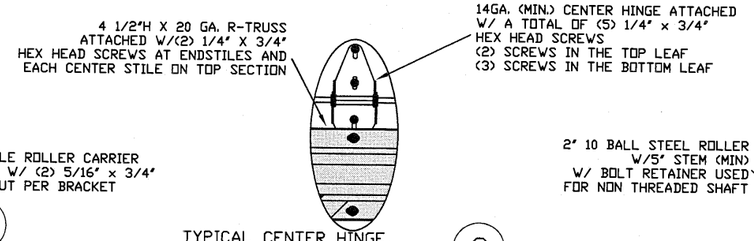

TYPICAL CENTER HINGE (2)
N.T.S.

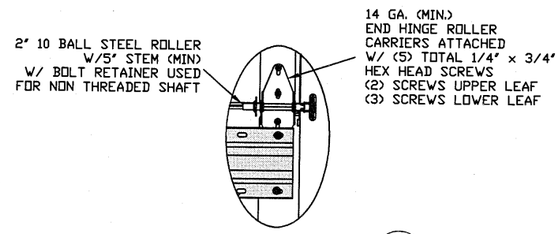

TYPICAL END HINGE (3)
N.T.S.

THE METHOD OF TESTING WAS IN SUBSTANTIAL CONFORMANCE WITH THE PROCEDURE DESCRIBED IN ASTM E330 AND DASMA 108. THE PRESSURES SHOWN ON THE DRAWINGS WERE CALCULATED USING ASCE 7-98/02/05 WITH THE FOLLOWING PARAMETERS (5 FEET OF DOOR WIDTH IN THE END ZONE, ROOF AT ANY SLOPE):

WIND SPEED (MPH)	130	118	112	107	103
EXPOSURE LEVEL	B	C	C	D	D
MEAN ROOF HEIGHT	30'	15'	25'	15'	25'

SPECIFICATIONS AND NOTES

1. DOORS AND HARDWARE WILL BE DESIGNED, MANUFACTURED AND INSTALLED WITH STANDARDS AS SET FORTH BY DASMA. EACH VERTICAL JAMBS RECEIVES MAXIMUM DESIGN LOADS OF: +228.6 LBS/FT & −258.3 LBS/FT
2. DOOR SECTIONS SHALL BE 27 GA. MIN. (.0151") ROLLED FORMED LIGHT COMMERCIAL QUALITY
3. SUPPORTING STRUCTURAL ELEMENTS SHALL BE DESIGNED BY A REGISTRED PROFESSIONAL ENGINEER FOR WIND LOADS INDICATED ON THIS DRAWING IN ADDITION TO OTHER LOADINGS.

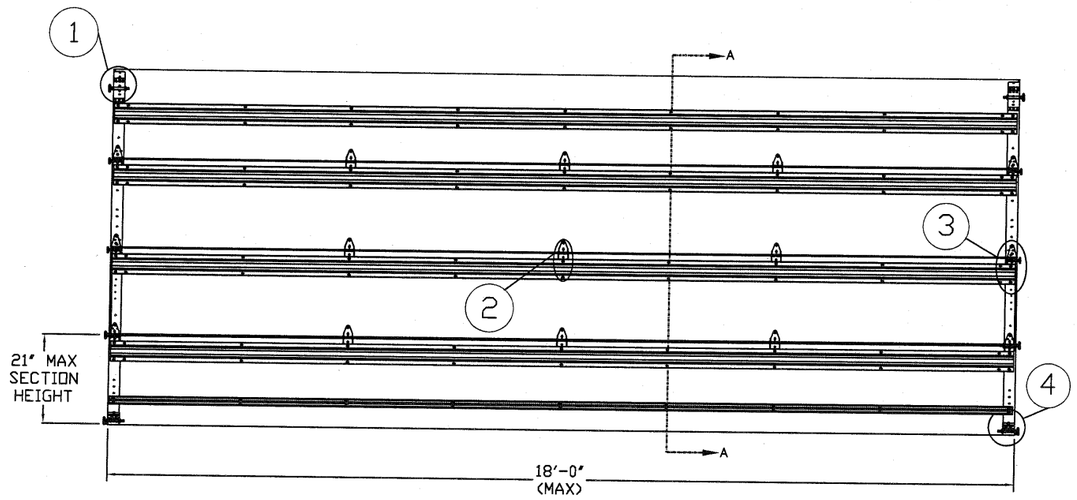

INSIDE ELEVATION
N.T.S.

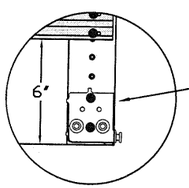

TRBB-375 BOTTOM BRACKET (4A)
N.T.S.

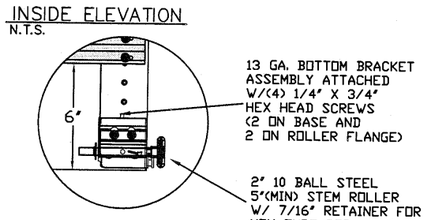

TRBB-375 BOTTOM BRACKET (4B)
N.T.S.

LARGE MISSILE IMPACT RESISTANT

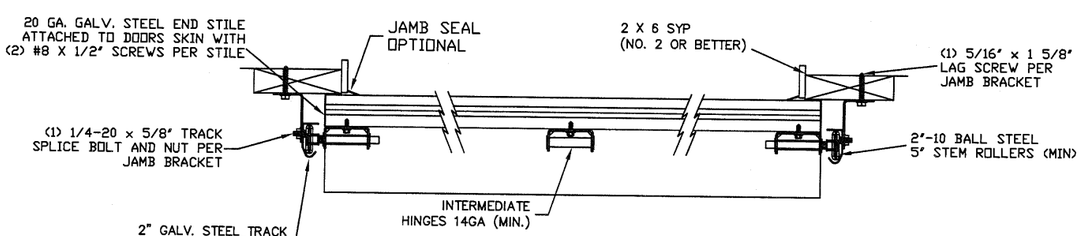

TRACK MOUNTING DETAIL
N.T.S.

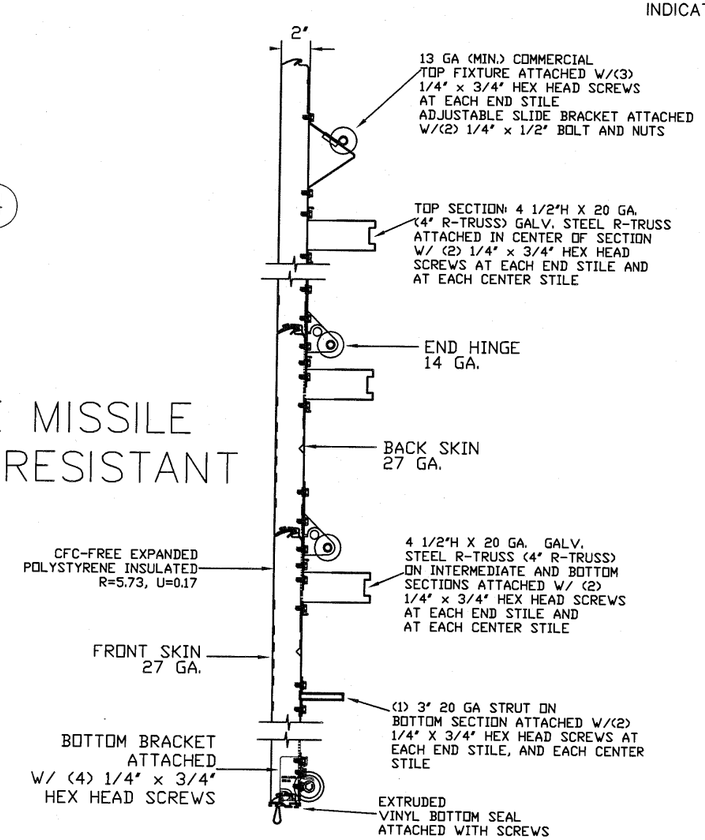

SECTION A-A (SIDE VIEW)
N.T.S.

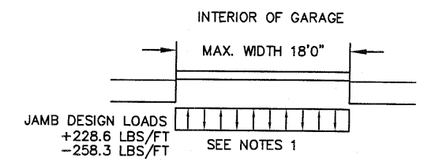

REV	DESCRIPTION OF REVISIONS	DATE	BY

MAX SIZE
18' WIDTH
14' HEIGHT

DESIGN LOADS
+25.4 PSF
−28.7 PSF

TEST LOADS
+38.1 PSF
−43.05 PSF

LARGE MISSILE IMPACT RESISTANT

Thomas L. Shelmerdine, PE (TX PE #85829)
Structural Solutions, PA (TX Firm #F-004063)

STATE OF TEXAS
THOMAS L. SHELMERDINE
85829
LICENSED
PROFESSIONAL ENGINEER
TX

dba Structural Solutions of North Carolina, Inc.
5921-G W. Friendly Ave., Greensboro, NC 27410

Amarr
165 CARRIAGE COURT WINSTON-SALEM, N.C. 27105 WWW.AMARR.COM

MODEL #1600 LINCOLN 3000
MODEL #1650 HILLCREST 3000

SIZE	DRAWN BY RLR	DATE 12/15/11	DRAWING NUMBER
B	CHECKED BY	DATE 00/00/00	IRC-1618-130-24-I
			SHEET 1 OF 3

TABLE 1

DOOR HEIGHT	TRACK ATTACHMENT								SPLICE
	A	B	C	D	E	F	G	H	S
6' 6"	3.5"	21"	39"	57"					70"
7'	3.5"	21"	42"	63"					76"
7' 6"	3.5"	18"	36"	54"	72"				82"
8'	3.5"	21"	39"	57"	75"				88"
8' 6"	3.5"	21"	42"	63"	81"				94"
9'	3.5"	18"	36"	54"	72"	90"			100"
9' 6"	3.5"	21"	39"	57"	75"	93"			106"
10'	3.5"	21"	42"	63"	81"	99"			112"
10' 6"	3.5"	21"	42"	63"	84"	105"			118"
11'	3.5"	21"	39"	57"	75"	93"	111"		124"
11' 6"	3.5"	21"	42"	63"	81"	99"	117"		130"
12'	3.5"	21"	42"	63"	84"	105"	123"		136"
12'6"	3.5"	21"	39"	57"	75"	93"	111"	129"	142"
13'	3.5"	21"	42"	63"	81"	99"	117"	135"	148"
13' 6"	3.5"	21"	42"	63"	84"	105"	123"	141"	154"
14'	3.5"	21"	42"	63"	84"	105"	126"	147"	160"

ALL TRACK ATTACHMENT SPACING +/-2" WITH SYP NO. 2 OR BETTER ONLY

TABLE 2

DOOR HEIGHT	SECTION HEIGHTS							
	Btm	#2	#3	#4	#5	#6	#7	#8
14' 0"	21"	21"	21"	21"	21"	21"	21"	21"
13' 6"	21"	21"	21"	21"	21"	18"	18"	21"
13' 0"	21"	21"	21"	18"	18"	18"	18"	21"
12' 6"	21"	18"	18"	18"	18"	18"	18"	21"
12' 0"	21"	21"	21"	21"	21"	18"	21"	
11' 6"	21"	21"	21"	18"	18"	18"	21"	
11' 0"	21"	18"	18"	18"	18"	18"	21"	
10' 6"	21"	21"	21"	21"	21"	21"		
10' 0"	21"	21"	21"	18"	18"	21"		
9'6"	21"	18"	18"	18"	18"	21"		
9' 0"	18"	18"	18"	18"	18"	18"		
8' 6"	21"	21"	21"	18"	21"			
8' 0"	21"	18"	18"	18"	21"			
7' 6"	18"	18"	18"	18"	18"			
7' 0"	21"	21"	21"	21"				
6' 6"	21"	18"	18"	21"				

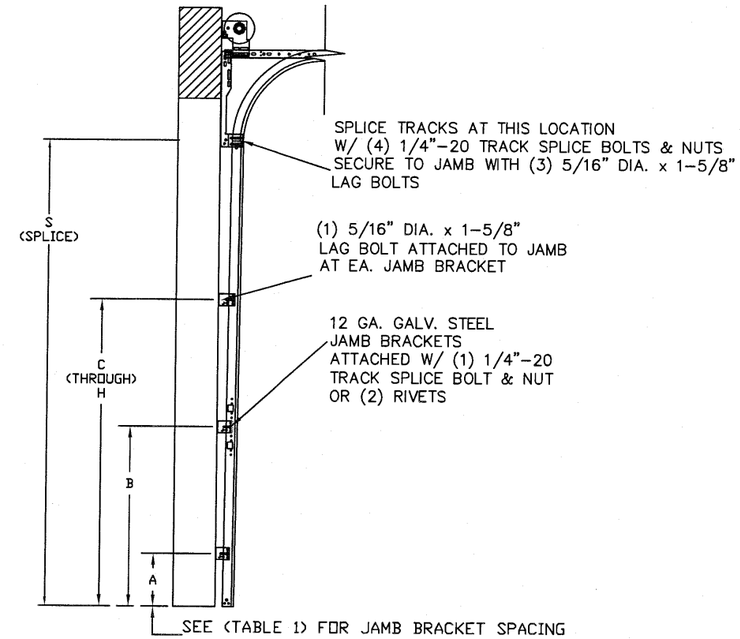

TRACK CONFIGURATION FOR 6'6" UP TO 14' TALL DOORS
N.T.S.

WOOD JAMB ATTACHMENT TO STRUCTURE

2 X 6 VERTICAL JAMB ATTACHMENT TO WOOD FRAME STRUCTURE
5/16" X 3" LAG SCREWS STARTING 6" FROM ENDS THEN 20" O.C. (1 1/2" EMBEDMENT)
2 X 6 VERTICAL JAMB ATTACHMENT TO 2,000 PSI CONCRETE
HILTI KWIK BOLT 3/8" X 4" STARTING 6" FROM ENDS THEN 24" O.C. (2 1/2" EMBEDMENT)
HILTI SLEEVE ANCHOR 3/8" X 2-3/4" STARTING 6" FROM ENDS THEN 18" O.C. (1 1/4" EMBEDMENT)
ITW/RAMSET REDHEAD (TRU-BOLT) 3/8" X 4" STARTING 6" FROM ENDS THEN 24" O.C. (2 1/2" EMBEDMENT)
2 X 6 VERTICAL JAMB ATTACHMENT TO HOLLOW C-90 BLOCK
SIMPSON 1/4" X 3" TITEN SCREWS STARTING 6" FROM ENDS, USE PAIRS OF FASTENERS (3" APART) AT 8" O.C. (1 1/2" EMBEDMENT)
HILTI 1/4" X 2-3/4" KWIK-CON II+ SCREWS STARTING 6" FROM ENDS, USE PAIRS OF FASTENERS (3" APART) AT 8" O.C. (1 1/4" EMBEDMENT)

2 X 6 VERTICAL JAMB ATTACHMENT TO GROUTED C-90 BLOCK (2000 PSI GROUT)
HILTI SLEEVE ANCHOR 3/8" X 2-3/4" STARTING 6" FROM ENDS THEN 22" O.C. (1 1/4" EMBEDMENT) (OR, USE FASTENERS FOR HOLLOW C-90 BLOCK)

*LAGS AND BOLTS CAN BE COUNTERSUNK TO PROVIDE A FLUSH MOUNTING SURFACE.
*PREPARATION OF WOOD JAMBS BY OTHERS

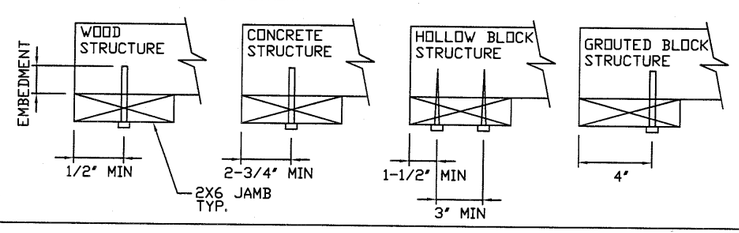

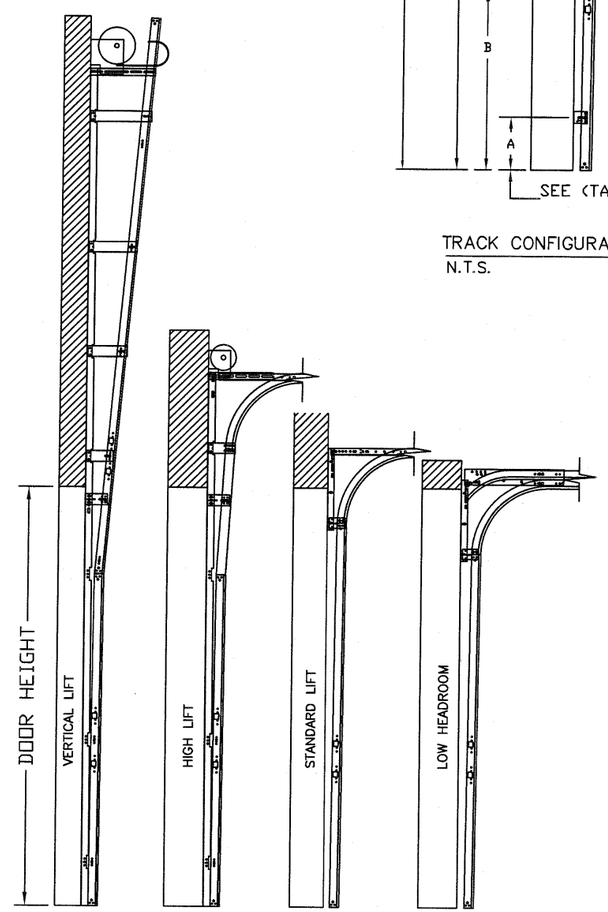

AVAILABLE TRACK CONFIGURATIONS
N.T.S.

REV	DESCRIPTION OF REVISIONS	DATE	BY

MAX SIZE
18' WIDTH
14' HEIGHT

DESIGN LOADS
+25.4 PSF
-28.7 PSF

TEST LOADS
+38.1 PSF
-43.05 PSF

LARGE MISSILE IMPACT RESISTANT

Thomas L. Shelmerdine, PE (TX PE #85829)
Structural Solutions, PA (TX Firm #F-004063)

STATE OF TEXAS
THOMAS L. SHELMERDINE
85829
LICENSED
PROFESSIONAL ENGINEER
TX

dba Structural Solutions of North Carolina, Inc.
5921-G W. Friendly Ave., Greensboro, NC 27410

Amarr

165 CARRIAGE COURT WINSTON-SALEM, N.C. 27105 WWW.AMARR.COM

MODEL #1600 LINCOLN 3000
MODEL #1650 HILLCREST 3000

SIZE	DRAWN BY RLR	DATE 12/15/11	DRAWING NUMBER
B	CHECKED BY	DATE 00/00/00	IRC-1618-130-24-I
			SHEET 2 OF 3

TABLE 3

Section		Center Stile Locations (Measured from Left Edge)			
Width (ft)		1st (in)	2st (in)	3rd (in)	4th (in)
10'	0	48.41	71.59		
10'	2	49.32	72.68		
10'	4	50.32	73.68		
10'	6	50.84	75.17		
10'	8	51.84	76.17		
10'	10	52.50	77.50		
11'	0	53.50	78.50		
11'	2	54.20	79.80		
11'	4	55.20	80.80		
11'	6	56.20	81.80		
11'	8	57.20	82.80		
11'	10	47.81	94.19		
12'	0	48.81	95.19		
12'	2	49.64	96.36		
12'	4	50.64	97.36		
12'	6	50.67	99.33		
12'	8	51.67	100.33		
12'	10	52.25	101.75		
13'	0	53.00	103.00		
13'	2	54.00	104.00		
13'	4	54.40	105.60		
13'	6	55.40	106.60		
13'	8	56.40	107.60		
13'	10	57.16	82.94	108.71	
14'	0	57.76	83.94	110.11	
14'	2	58.85	84.94	111.41	
14'	4	59.16	85.94	112.71	
14'	6	59.86	86.94	114.01	
14'	8	60.56	87.94	115.31	
14'	10	61.26	88.94	116.61	
15'	0	61.94	89.94	117.94	
15'	2	62.66	90.94	119.21	
15'	4	53.60	79.20	104.80	
15'	6	46.62	93.00	139.38	
15'	8	47.62	94.00	140.38	
15'	10	48.62	95.00	141.38	
16'	0	49.62	96.00	142.38	
16'	2	50.27	97.00	143.73	
16'	4	51.27	98.00	144.73	
16'	6	52.27	99.00	145.73	
16'	8	51.34	100.00	148.66	
16'	10	51.50	101.00	150.50	
17'	0	53.34	102.00	150.66	
17'	2	53.00	103.00	153.00	
17'	4	54.00	104.00	154.00	
17'	6	55.00	105.00	155.00	
17'	8	54.80	106.00	157.20	
17'	10	55.80	107.00	158.20	
18'	0	57.25	108.00	158.75	

REV	DESCRIPTION OF REVISIONS	DATE	BY

MAX SIZE
18' WIDTH
14' HEIGHT

DESIGN LOADS
+25.4 PSF
−28.7 PSF

TEST LOADS
+38.1 PSF
−43.05 PSF

LARGE MISSILE IMPACT RESISTANT

Thomas L. Shelmerdine, PE (TX PE #85829)
Structural Solutions, PA (TX Firm #F-004063)

STATE OF TEXAS
THOMAS L. SHELMERDINE
85829
LICENSED
PROFESSIONAL ENGINEER
TX

dba Structural Solutions of North Carolina, Inc.
5921-G W. Friendly Ave., Greensboro, NC 27410

Amarr

165 CARRIAGE COURT WINSTON-SALEM, N.C. 27105 WWW.AMARR.COM

MODEL #1600 LINCOLN 3000
MODEL #1650 HILLCREST 3000

SIZE	DRAWN BY RLR	DATE 12/15/11	DRAWING NUMBER
B	CHECKED BY	DATE 00/00/00	IRC-1618-130-24-I
			SHEET 3 OF 3