THERMA-TRU®
DOORS
Classic-Craft®

GLAZED FIBERGLASS DOOR
INSWING/OUTSWING
"NON-IMPACT"

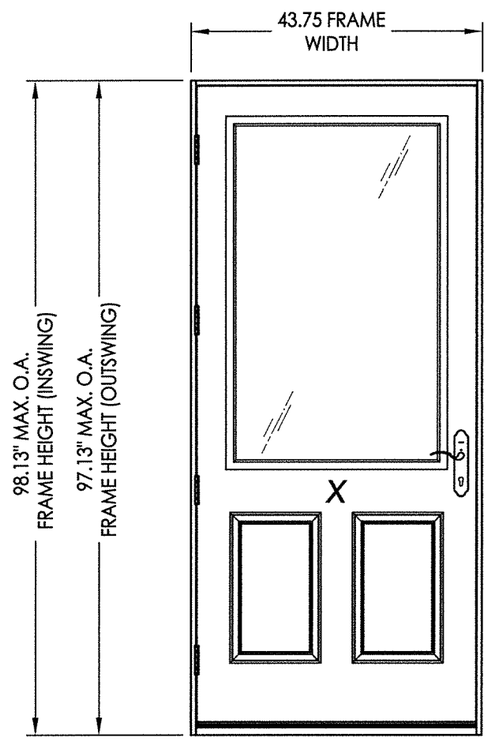

EVALUATED FOR USE IN THE STATE OF TEXAS

The Fiberglass Door described herein complies with the 2006 International Residential Code (IRC), Sections R301 & R613 and the 2006 International Building Code (IBC), Sections 1405.12, 1609, 1714.5, 2403 and 2404 (including Texas revisions) subject to the following conditions:

1. Anchors shall be as listed and spaced as shown in the details. Anchor embedment to base material shall be beyond wall dressing or stucco.
2. When used in areas requiring wind-borne debris protection this product is required to be protected with an impact resistant covering that complies with Section R301.2.1.2 of the IRC and Section 1609.1.2 of the IBC.
3. Allowable design pressure requirements must be equal to or less than the design pressure rating shown in the design pressure chart, sheet 1 of this drawing.
4. Conditions not covered by this drawing are subject to further engineering analysis.

TABLE OF CONTENTS

SHEET#	DESCRIPTION
1	Typical Elevations, Design Pressures & General Notes
2	Door Panel Details (Lite Frame Glazing)
3	Door Panel Flush Glazing Details
4	Lite Frame Glazing Details
5	Elevations
6	Horizontal & Vertical Cross Sections
7	Vertical Cross Sections (Thresholds)
8	Buck & Frame Anchoring & Hardware Details
9	Bill of Materials and Components

CONFIGURATION	Lock Hardware	DESIGN PRESSURE (PSF) INSWING		DESIGN PRESSURE (PSF) OUTSWING	
		POSITIVE	NEGATIVE	POSITIVE	NEGATIVE
X	Multipoint*	+65.0	-75.0	+65.0	-65.0
X	Kwikset*	+30.0	-30.0	+30.0	-30.0
X	Schlage*	+30.0	-30.0	+30.0	-30.0

See Sheet 5 for Hardware Specifications

STATE OF TEXAS
LYNDON F. SCHMIDT
104123
LICENSED
PROFESSIONAL ENGINEER
3.2.16

Documents Prepared By: Lyndon F. Schmidt, P.E.
TEXAS P.E. #104123
RW BUILDING CONSULTANTS, INC.
P.O. Box 230 Valrico FL. 33595
Phone No.: 813.659.9197
TEXAS BOARD OF PROFESSIONAL ENGINEERS
CERTIFICATE OF REGISTRATION # F-11852

PRODUCT: THERMA-TRU FIBERGLASS DOOR

PART OR ASSEMBLY: TYPICAL ELEVATION, DESIGN PRESSURES & GENERAL NOTES

REVISIONS

NO.	DATE	BY

DATE: 2/10/16
SCALE: N.T.S.
DWG. BY: JK
CHK. BY: LFS
DRAWING NO.: TX-4602
SHEET 1 OF 9

© 2016 R.W. BUILDING CONSULTANTS INC.

R:\Clients\Therma Tru PERMANENT\B - Texas Dept of Ins\TDI - DR XXX 8-0 Glazed Classic Craft Non-Impact\C - Drawings\TX-4602.03.dwg, TX-4602

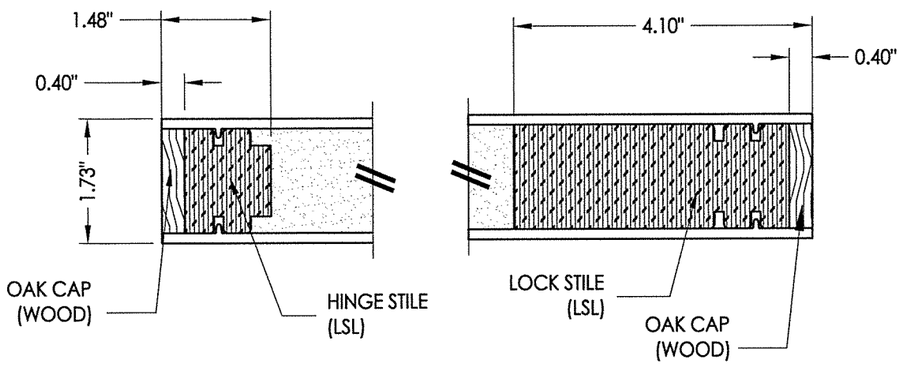

1/2 **HORIZONTAL CROSS SECTION**

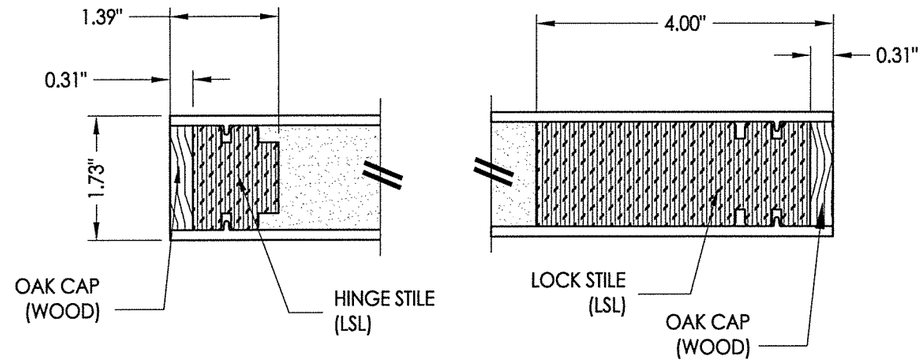

2/2 **HORIZONTAL CROSS SECTION**

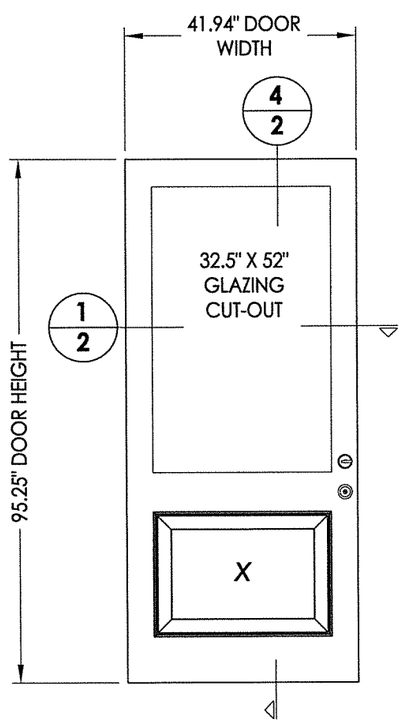

40 **DOOR PANEL**
Book Door

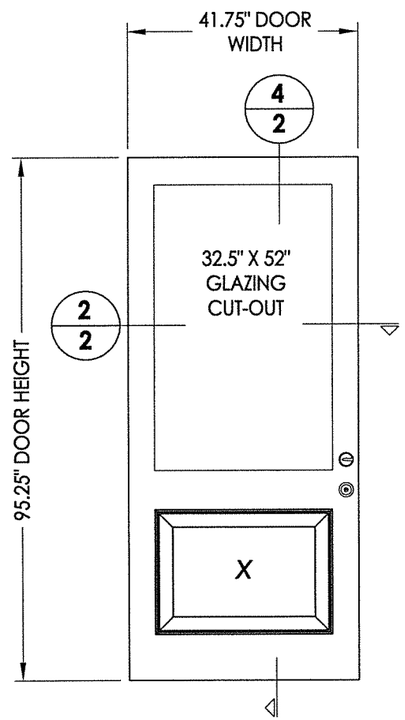

41 **DOOR PANEL**
Hybrid Door

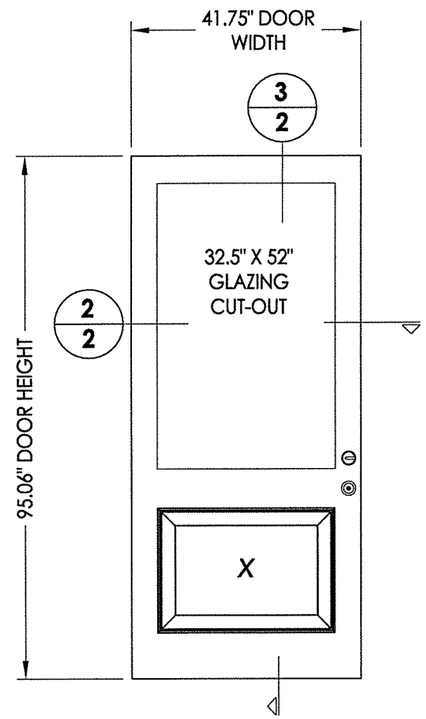

42 **DOOR PANEL**
U1 Door

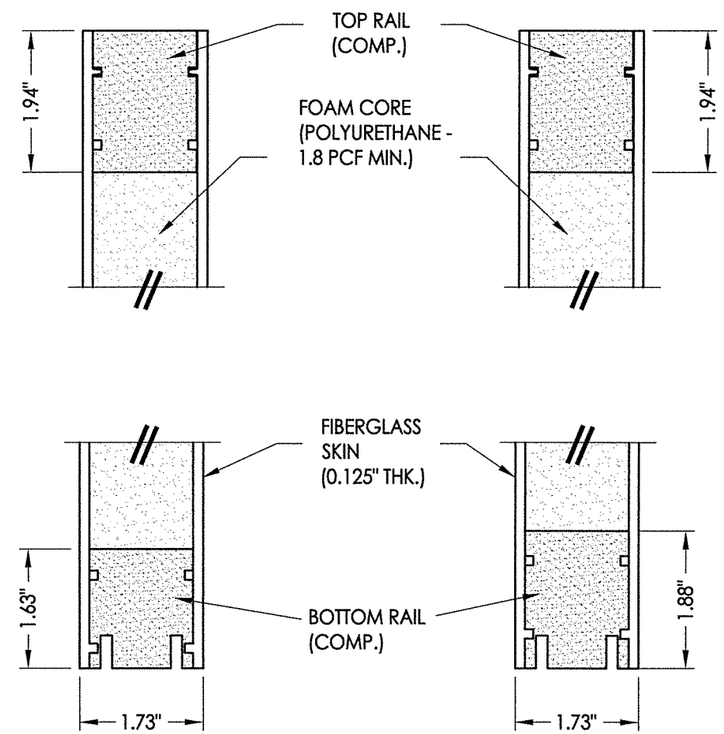

3/2 **VERTICAL CROSS SECTION**

4/2 **VERTICAL CROSS SECTION**

STATE OF TEXAS
LYNDON F. SCHMIDT
104123
LICENSED PROFESSIONAL ENGINEER

Documents Prepared By: Lyndon F. Schmidt, P.E.
TEXAS P.E. #104123

RW BUILDING CONSULTANTS, INC.
P.O. Box 230 Valrico FL. 33595
Phone No.: 813.659.9197

TEXAS BOARD OF PROFESSIONAL ENGINEERS
CERTIFICATE OF REGISTRATION # F-11852

PRODUCT: THERMA-TRU FIBERGLASS DOOR

PART OR ASSEMBLY: DOOR PANEL DETAILS (LITE FRAME GLAZING)

NO.	DATE	REVISIONS	BY

DATE: 2/10/16
SCALE: N.T.S.
DWG. BY: JK
CHK. BY: LFS
DRAWING NO.: TX-4602
SHEET 2 OF 9

© 2016 R.W. BUILDING CONSULTANTS INC.

R:\Clients\Therma Tru PERMANENT\B - Texas Dept of Ins\TDI - DR XXX 8-0 Glazed Classic Craft Non-Impact\C - Drawings\TX-4602.03.dwg, 2.1

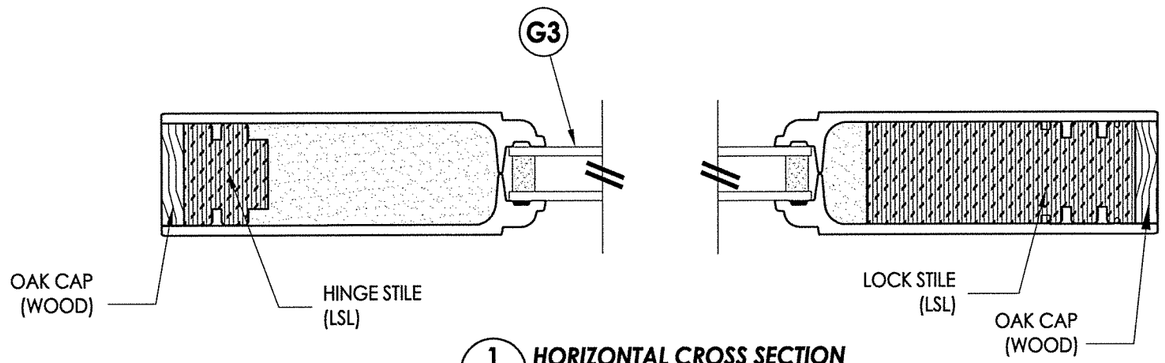

1/3 **HORIZONTAL CROSS SECTION**

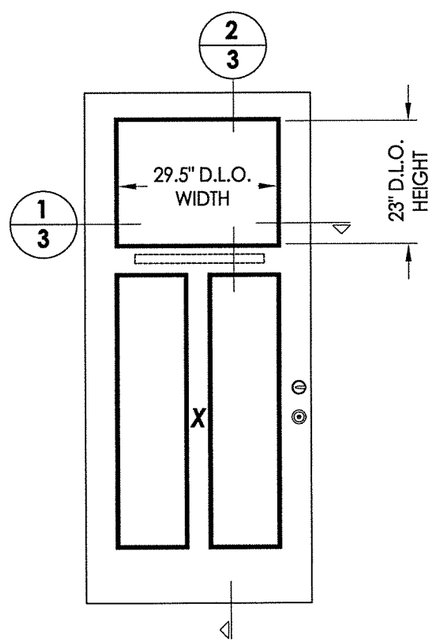

FLUSH GLAZED DOOR PANEL
SEE SHEET 2 FOR PANEL DETAILS

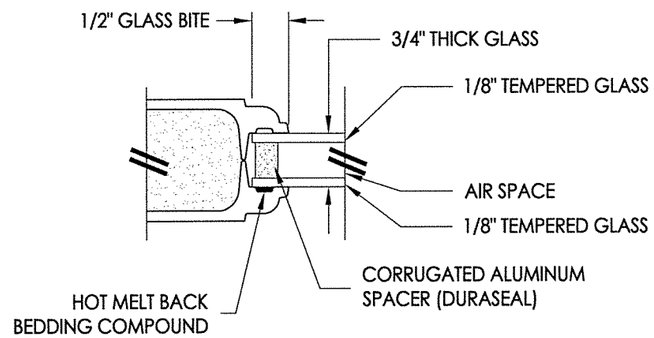

G3 **GLAZING DETAIL**
FLUSH GLAZED

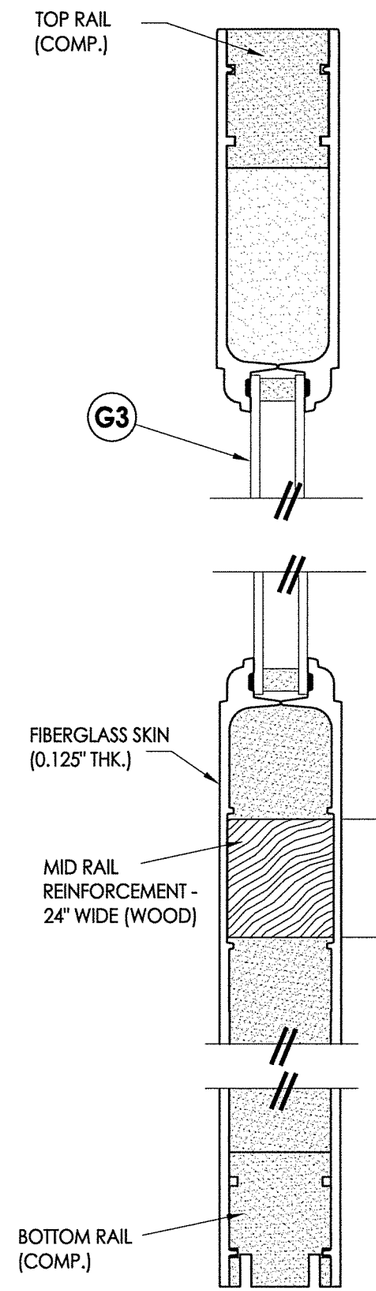

2/3 **VERTICAL CROSS SECTION**

STATE OF TEXAS
LYNDON F. SCHMIDT
104123
LICENSED PROFESSIONAL ENGINEER

Documents Prepared By: Lyndon F. Schmidt, P.E.
TEXAS P.E. #104123
RW BUILDING CONSULTANTS, INC.
P.O. Box 230 Valrico FL. 33595
Phone No.: 813.659.9197
TEXAS BOARD OF PROFESSIONAL ENGINEERS
CERTIFICATE OF REGISTRATION # F-11852

PRODUCT: THERMA-TRU FIBERGLASS DOOR

PART OR ASSEMBLY: DOOR PANEL FLUSH GLAZING DETAILS

NO.	DATE	REVISIONS	BY

DATE: 2/10/16
SCALE: N.T.S.
DWG. BY: JK
CHK. BY: LFS
DRAWING NO.: TX-4602
SHEET 3 OF 9

© 2016 R.W. BUILDING CONSULTANTS INC.

R:\Clients\Therma Tru PERMANENT\B - Texas Dept of Ins\TDI - DR XXX 8-0 Glazed Classic Craft Non-Impact\C - Drawings\TX-4602.03.dwg, 3.1

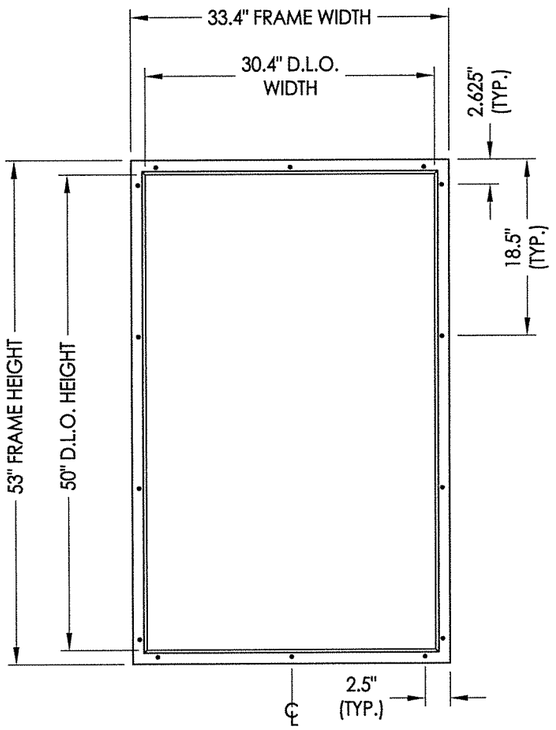

ALUMINUM LITE FRAME

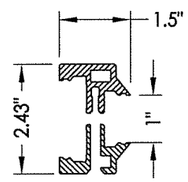

ALUMINUM LITE FRAME

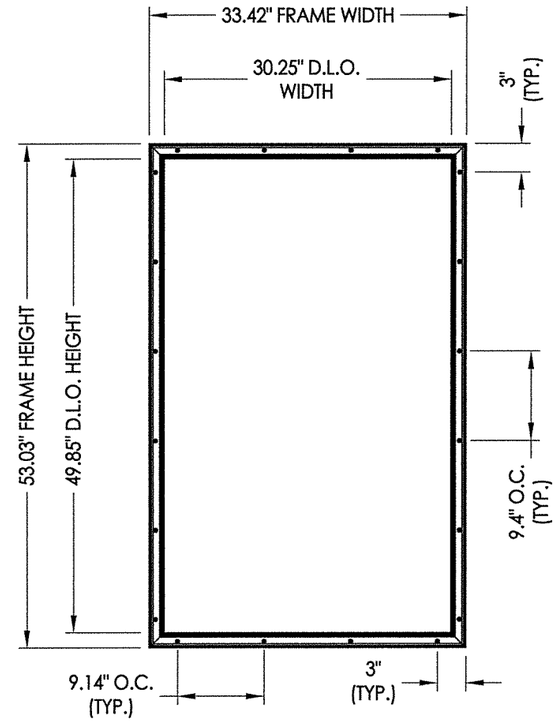

SMC LITE FRAME

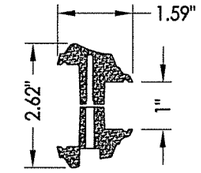

SMC LITE FRAME

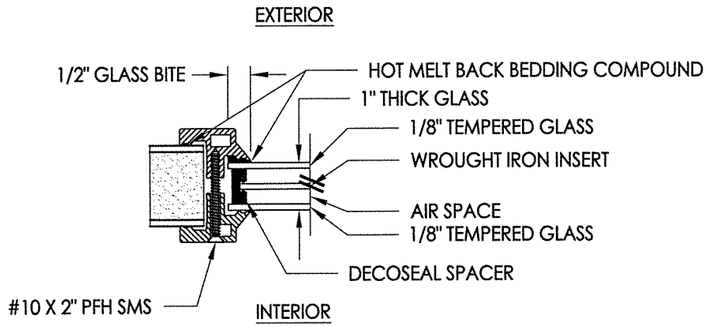

G1 **GLAZING DETAIL**

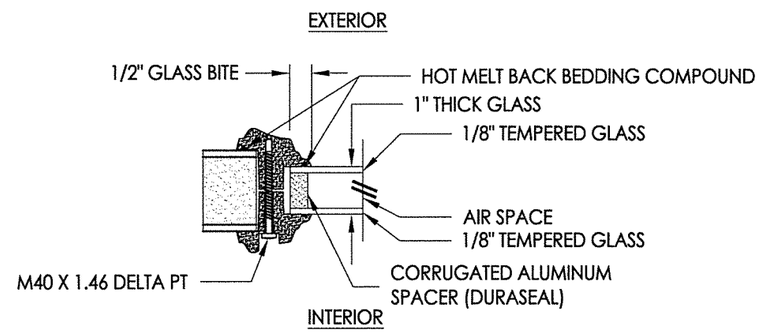

G2 **GLAZING DETAIL**

STATE OF TEXAS
LYNDON F. SCHMIDT
104123
LICENSED PROFESSIONAL ENGINEER

Documents Prepared By: Lyndon F. Schmidt, P.E.
TEXAS P.E. #104123

RW BUILDING CONSULTANTS, INC.
P.O. Box 230 Valrico FL. 33595
Phone No.: 813.659.9197

TEXAS BOARD OF PROFESSIONAL ENGINEERS
CERTIFICATE OF REGISTRATION # F-11852

PRODUCT: THERMA-TRU FIBERGLASS DOOR

PART OR ASSEMBLY: LITE FRAME GLAZING DETAILS

NO.	DATE	BY

REVISIONS

DATE: 2/10/16
SCALE: N.T.S.
DWG. BY: JK
CHK. BY: LFS
DRAWING NO.: TX-4602
SHEET 4 OF 9

© 2016 R.W. BUILDING CONSULTANTS INC.

R:\Clients\Therma Tru PERMANENT\B - Texas Dept of Ins\TDI - DR XXX 8-0 Glazed Classic Craft Non-Impact\C - Drawings\TX-4602.03.dwg, 4.1

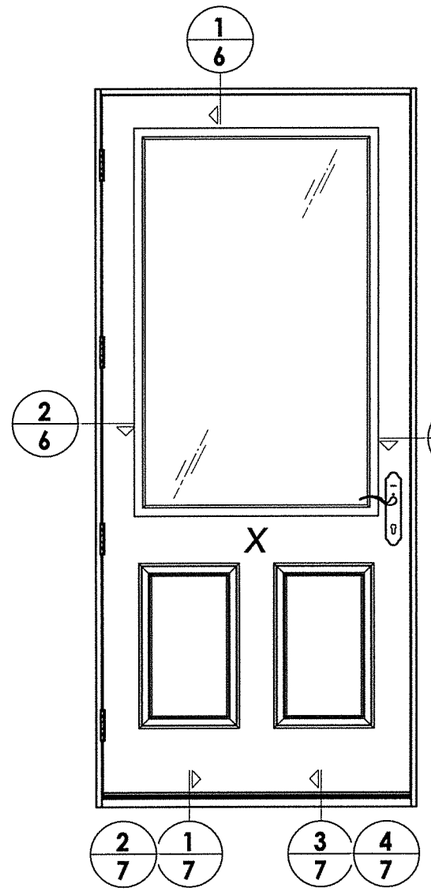

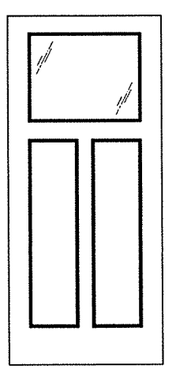

Flushed Glazed
Rectangular

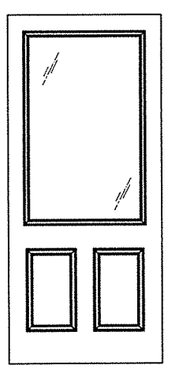

SMC Lite Frame
Rectangular

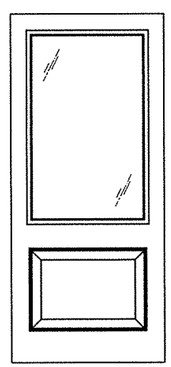

Aluminum Lite Frame
Rectangular

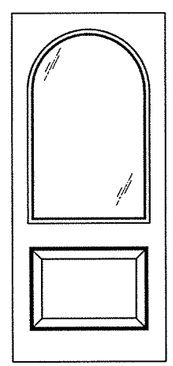

Aluminum Lite Frame
Round Top

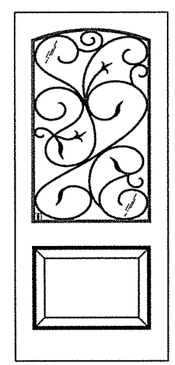

Aluminum Lite Frame
Arch Top w/ Wrought Iron Insert

Classic Craft Door Panel Options

Panel options shown are for illustration and are representative only
(similar opaque panel configurations are allowed, see glazing details for glazed panel limitations)

HARDWARE TABLE	
MANUFACTURER	**MODEL**
HOPPE (THERMA-TRU)	MULTIPOINT LOCK: MPDGART
SCHLAGE	KNOB: F51 DEADBOLT: B60N
KWIKSET	KNOB: SIGNATURE SERIES DEADBOLT: SIGNATURE SERIES (980)

STATE OF TEXAS
LYNDON F. SCHMIDT
104123
LICENSED PROFESSIONAL ENGINEER

Documents Prepared By: Lyndon F. Schmidt, P.E.
TEXAS P.E. #104123

RW BUILDING CONSULTANTS, INC.
P.O. Box 230 Valrico FL. 33595
Phone No.: 813.659.9197

TEXAS BOARD OF PROFESSIONAL ENGINEERS
CERTIFICATE OF REGISTRATION # F-11852

PRODUCT: THERMA-TRU FIBERGLASS DOOR

PART OR ASSEMBLY: ELEVATIONS

NO.	DATE	REVISIONS	BY

DATE: 2/10/16
SCALE: N.T.S.
DWG. BY: JK
CHK. BY: LFS
DRAWING NO.: TX-4602
SHEET 5 OF 9

© 2016 R.W. BUILDING CONSULTANTS INC.

R:\Clients\Therma Tru PERMANENT\B - Texas Dept of Ins\TDI - DR XXX 8-0 Glazed Classic Craft Non-Impact\C - Drawings\TX-4602.03.dwg, 5.1

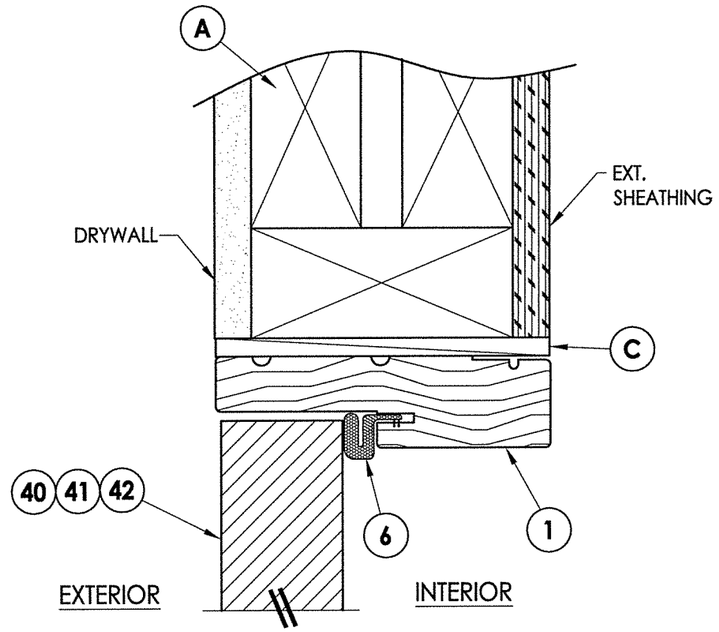

1/6 VERTICAL CROSS SECTION
Outswing shown (Inswing similar)

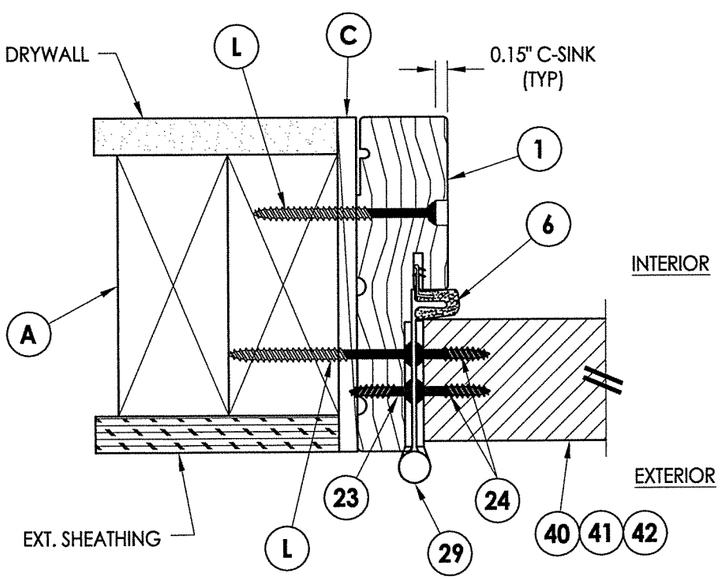

2/6 HORIZONTAL CROSS SECTION
Outswing shown (Inswing similar)

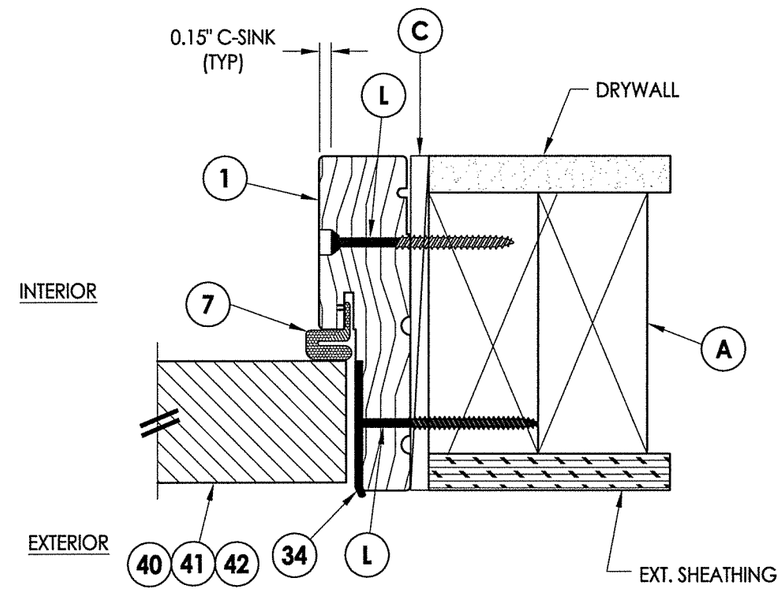

3/6 HORIZONTAL CROSS SECTION
Outswing shown (Inswing similar)

STATE OF TEXAS
LYNDON F. SCHMIDT
104123
LICENSED PROFESSIONAL ENGINEER

Documents Prepared By: Lyndon F. Schmidt, P.E.
TEXAS P.E. #104123

RW BUILDING CONSULTANTS, INC.
P.O. Box 230 Valrico FL. 33595
Phone No.: 813.659.9197

TEXAS BOARD OF PROFESSIONAL ENGINEERS
CERTIFICATE OF REGISTRATION # F-11852

PRODUCT: *THERMA-TRU FIBERGLASS DOOR*

PART OR ASSEMBLY: *HORIZONTAL & VERTICAL CROSS SECTIONS*

NO.	DATE	REVISIONS	BY

DATE: 2/10/16
SCALE: N.T.S.
DWG. BY: JK
CHK. BY: LFS
DRAWING NO.: TX-4602
SHEET 6 OF 9

© 2016 R.W. BUILDING CONSULTANTS INC.

R:\Clients\Therma Tru PERMANENT\B - Texas Dept of Ins\TDI - DR XXX 8-0 Glazed Classic Craft Non-Impact\C - Drawings\TX-4602.03.dwg, 6.1

Notes:
1. Sill Item #'s 13, 16, 17, 19 & 20 are attached to jambs w/ (3) #8 X 2-1/2" pfh screws at each end.
   Sill Item #'s 14 & 15 are attached to jambs w/ (2) #8 X 2-1/2" pfh screws at each end.
   Sill Item # 18 is attached to jambs utilizing (4) #10 X 1-1/2" pph screws at each end.

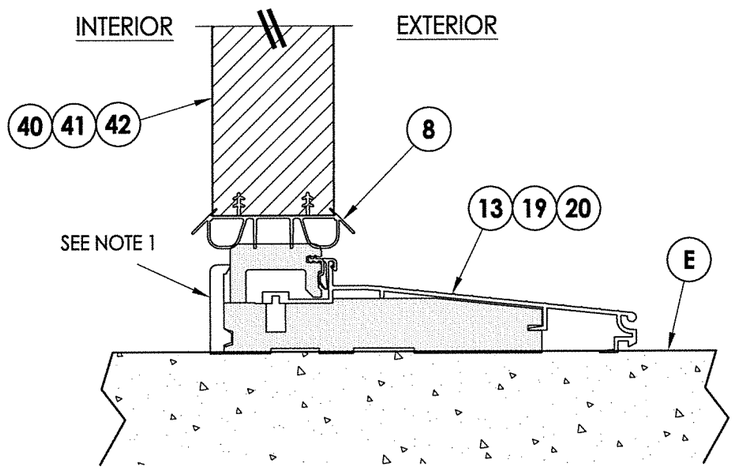

1/7 **VERTICAL CROSS SECTION**
Inswing Threshold

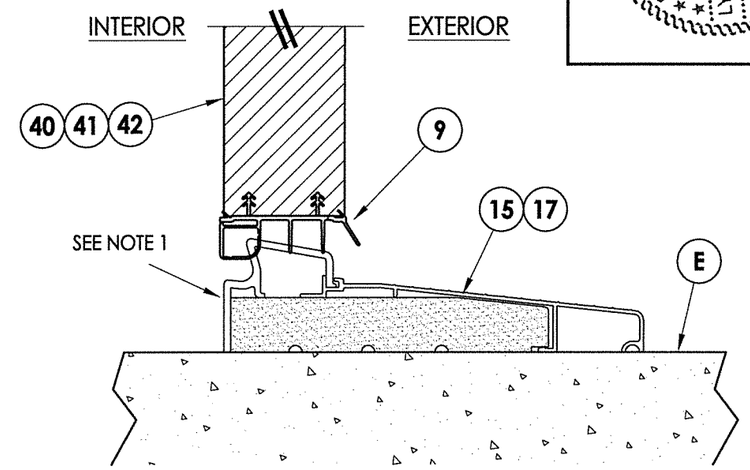

2/7 **VERTICAL CROSS SECTION**
Inswing Threshold

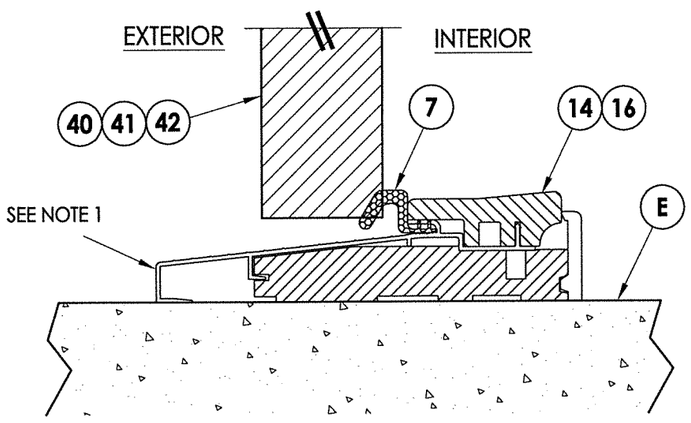

3/7 **VERTICAL CROSS SECTION**
Outswing Threshold

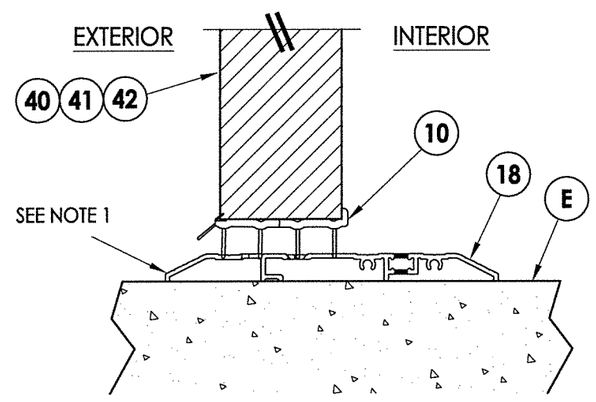

4/7 **VERTICAL CROSS SECTION**
Public Access Threshold

STATE OF TEXAS
LYNDON F. SCHMIDT
104123
LICENSED PROFESSIONAL ENGINEER

Documents Prepared By: Lyndon F. Schmidt, P.E.
TEXAS P.E. #104123

RW BUILDING CONSULTANTS, INC.
P.O. Box 230 Valrico FL. 33595
Phone No.: 813.659.9197

TEXAS BOARD OF PROFESSIONAL ENGINEERS
CERTIFICATE OF REGISTRATION # F-11852

PRODUCT: THERMA-TRU FIBERGLASS DOOR

PART OR ASSEMBLY: VERTICAL CROSS SECTIONS (THRESHOLDS)

NO.	DATE	REVISIONS	BY

DATE: 2/10/16
SCALE: N.T.S.
DWG. BY: JK
CHK. BY: LFS
DRAWING NO.: TX-4602
SHEET 7 OF 9

© 2016 R.W. BUILDING CONSULTANTS INC.

R:\Clients\Therma Tru PERMANENT\B - Texas Dept of Ins\TDI - DR XXX 8-0 Glazed Classic Craft Non-Impact\C - Drawings\TX-4602.03.dwg, 7.1

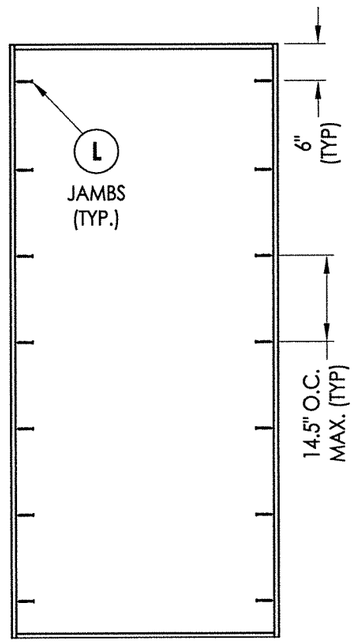

X

FRAME ANCHORING

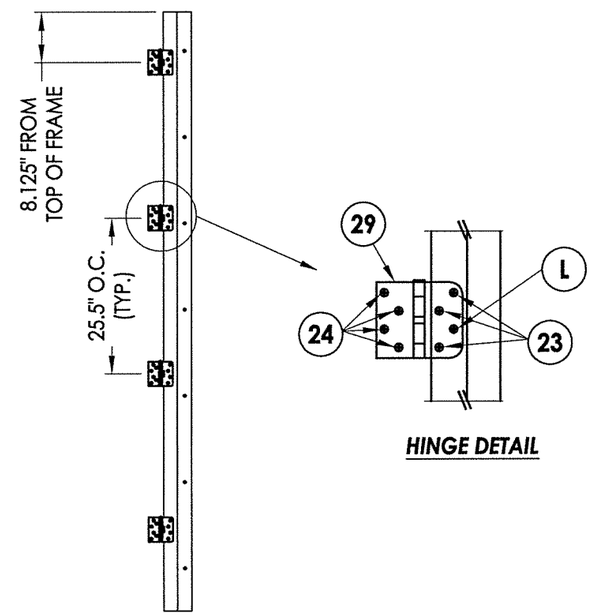

HINGE JAMB

HINGE DETAIL

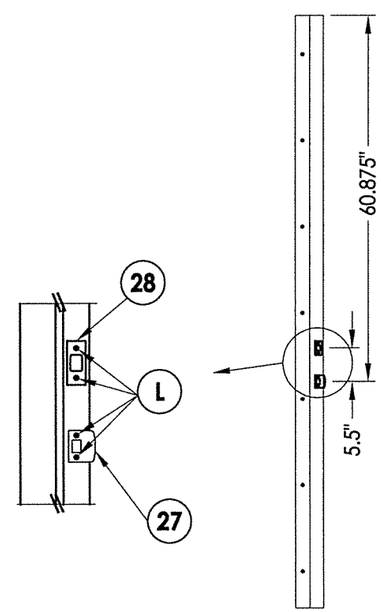

LATCH AND DEADBOLT STRIKE PLATE DETAILS

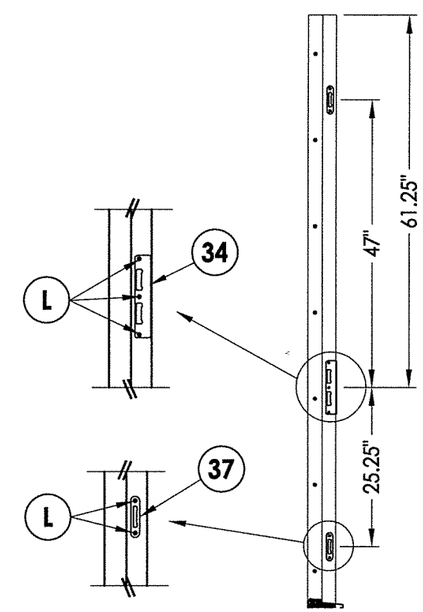

MULTIPOINT LOCK STRIKE PLATE DETAILS

STATE OF TEXAS
LYNDON F. SCHMIDT
104123
LICENSED
PROFESSIONAL ENGINEER

Documents Prepared By: Lyndon F. Schmidt, P.E.
TEXAS P.E. #104123

RW BUILDING CONSULTANTS, INC.
P.O. Box 230 Valrico FL. 33595
Phone No.: 813.659.9197

TEXAS BOARD OF PROFESSIONAL ENGINEERS
CERTIFICATE OF REGISTRATION # F-11852

PRODUCT: THERMA-TRU FIBERGLASS DOOR

PART OR ASSEMBLY: BUCK & FRAME ANCHORING & HARDWARE DETAILS

NO.	DATE	REVISIONS	BY

DATE: 2/10/16
SCALE: N.T.S.
DWG. BY: JK
CHK. BY: LFS
DRAWING NO.: TX-4602
SHEET 8 OF 9

© 2016 R.W. BUILDING CONSULTANTS INC.

R:\Clients\Therma Tru PERMANENT\B - Texas Dept of Ins\TDI - DR XXX 8-0 Glazed Classic Craft Non-Impact\C - Drawings\TX-4602.03.dwg, 8.1

BILL OF MATERIALS

ITEM #	DESCRIPTION	MATERIAL
A	2X FRAMING (SG >= 0.42)	WOOD
C	1/4" MAX. SHIM SPACE	-
L	#10 X 2-1/2" PFH WOOD SCREW (1.15" MIN. EMBEDMENT)	STEEL
1	JAMB (FINGER JOINT PINE)	WOOD
6	WEATHERSTRIP (Medium Reach)	FOAM
7	WEATHERSTRIP (Long Reach)	FOAM
8	SWEEP	VINYL
9	SWEEP (Use w/ Moderate Climate Threshold)	VINYL
10	SWEEP (Use w/ Public Access Threshold)	VINYL
13	INSWING THRESHOLD	ALUM/COMP
14	OUTSWING THRESHOLD	ALUM/COMP
15	INSWING THRESHOLD	ALUM/COMP
16	OUTSWING THRESHOLD	ALUM/COMP
17	INSWING THRESHOLD	ALUM/COMP
18	PUBLIC ACCESS THRESHOLD	ALUM
19	INSWING THRESHOLD	ALUM/COMP
20	INSWING THRESHOLD	ALUM/COMP
23	#10 x 3/4" PFH WOOD SCREW	STEEL
24	#10 x 1" PFH WOOD SCREW	STEEL
25	#8 x 2-1/2" PFH WOOD SCREW	STEEL
27	LATCH STRIKE PLATE	STEEL
28	DEADBOLT STRIKE PLATE	STEEL
29	4" X 4" HINGE	STEEL
34	MULTI-POINT LATCH & DEADBOLT STRIKE PLATE	STEEL
37	MULTI-POINT TONGUE STRIKE PLATE	STEEL
40	DOOR PANEL (BOOK DOOR)	-
41	DOOR PANEL (HYBRID DOOR)	-
42	DOOR PANEL (U1 DOOR)	-

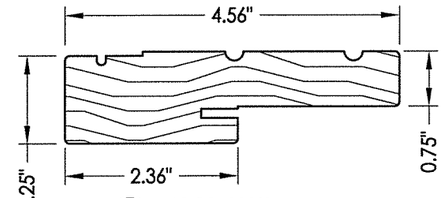

1 WOOD JAMB

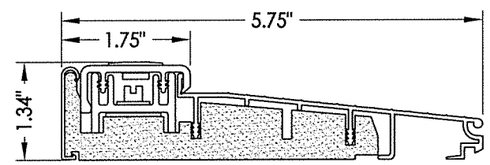

13 INSWING THRESHOLD
Adjustable

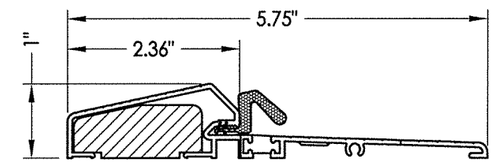

14 OUTSWING THRESHOLD

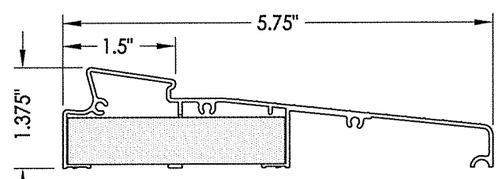

15 INSWING THRESHOLD
Moderate Climate

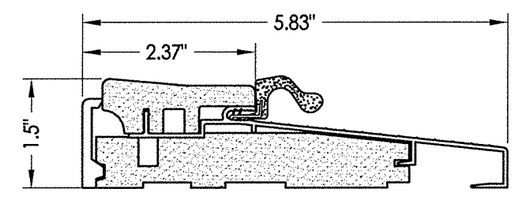

16 OUTSWING THRESHOLD

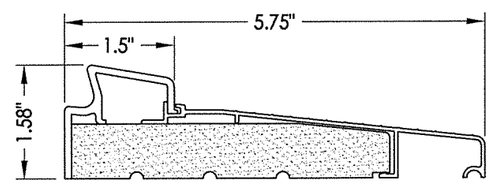

17 INSWING THRESHOLD
Basic Fixed

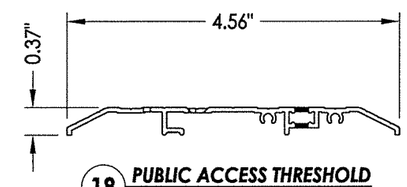

18 PUBLIC ACCESS THRESHOLD

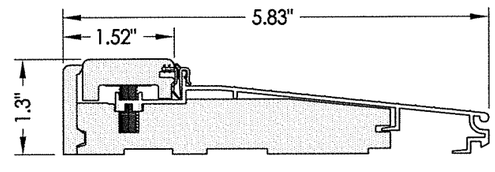

19 INSWING THRESHOLD
Adjustable

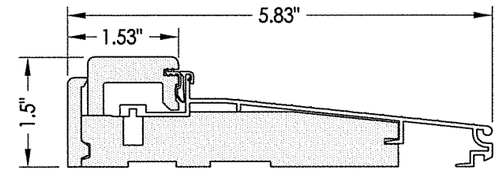

20 INSWING THRESHOLD
Adjustable

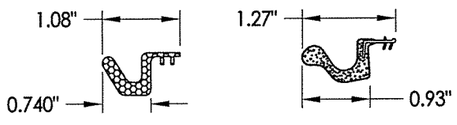

6 WEATHERSTRIP
Medium Reach

7 WEATHERSTRIP
Long Reach

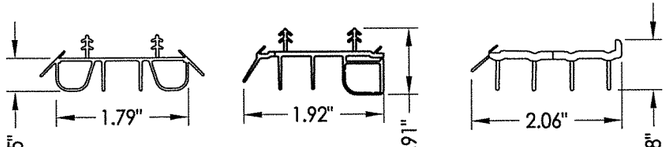

8 SWEEP

9 SWEEP

10 SWEEP

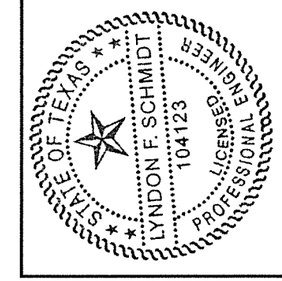

Documents Prepared By: Lyndon F. Schmidt, P.E.
TEXAS P.E. #104123

RW BUILDING CONSULTANTS, INC.
P.O. Box 230 Valrico FL. 33595
Phone No.: 813.659.9197

TEXAS BOARD OF PROFESSIONAL ENGINEERS
CERTIFICATE OF REGISTRATION # F-11852

PRODUCT: THERMA-TRU FIBERGLASS DOOR

PART OR ASSEMBLY: BILL OF MATERIALS & COMPONENTS

NO.	DATE	REVISIONS	BY

DATE: 2/10/16
SCALE: N.T.S.
DWG. BY: JK
CHK. BY: LFS
DRAWING NO.: TX-4602
SHEET 9 OF 9

© 2016 R.W. BUILDING CONSULTANTS INC.

R:\Clients\Therma Tru PERMANENT\B - Texas Dept of Ins\TDI - DR XXX 8-0 Glazed Classic Craft Non-Impact\C - Drawings\TX-4602.03.dwg, 9.1